1004546 E

REVISIONS			
SYM	DESCRIPTION	DATE	APPROVAL
—	CLASS A RELEASE PER TDRR 02791	2/5/63	
A	REVISED PER TDRR 04739	4-9-63	
B	REVISED PER TDRR 05770	1-21-64	
C	REVISED PER TDRR 12092 DR M. RIPLEY CHK RTM	8/24/64	
D	REVISED PER TDRR 13013 DR J. P. CHK	5/26/65	
E	REVISED PER TDRR 21334 DR B. CHK	8/3/65	

PART NO.	DIM. A		DIM. B		DIM. C	
	MAX	MIN	MAX	MIN	MAX	MIN
-1	.208	.203	.299	.295	.022	.018
-2	.154	.146	.312	.302	.034	.026
-3	.181	.176	.299	.295	.022	.018
-4	.164	.158	.292	.288	.022	.018
-5	1.145	1.135	1.500	1.475	.034	.026

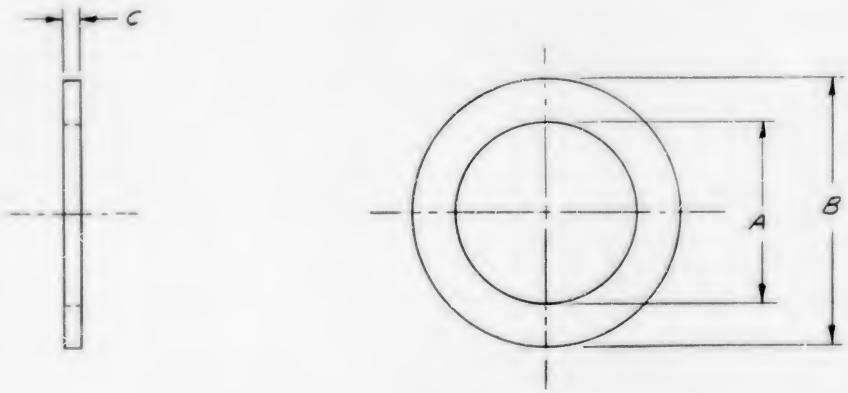

NOTES

1. MAT'L 303 CRES CLASS 303 COND A PER QQ-S-763
   ALT: 302 CRES CLASS 303 COND A PER QQ-S-763
2. PASSIVATE PER MIL-F-14072 FINISH E300 TYPE I
3. SURFACE QUALITY 63
4. REMOVE ALL BURRS & SHARP EDGES
5. INTERPRET DRAWING IN ACCORDANCE WITH STANDARDS PRESCRIBED BY MIL-D-70327

QTY REQD	PART OR IDENTIFYING NO.	NOMENCLATURE OR DESCRIPTION	FIND NO.

LIST OF MATERIALS

2003909	
1003074	
1003174	
NEXT ASSY	USED ON
APPLICATION	

UNLESS OTHERWISE SPECIFIED DIMENSIONS ARE IN INCHES
TOLERANCES ON
FRACTIONS ± DECIMALS ±.005 ANGLES ±
DO NOT SCALE THIS DRAWING
MATERIAL: SEE NOTE 1
HEAT TREATMENT: NONE
FINAL FINISH: SEE NOTE 2

MIT INSTRUMENTATION LAB, CAMBRIDGE, MASS.
DWG. NO. CONTRACT
DRAWN F. Mahan DATE Aug 63
CHECKED Aug 63
APPROVAL Aug 28 63
APPROVAL Sept 63
NASA APPROVAL
MIT APPROVAL
MIT APPROVAL

MANNED SPACECRAFT CENTER
HOUSTON, TEXAS

WASHER, FLAT

CODE IDENT NO. —
SIZE C
NASA DRAWING NO. 1004546
SCALE 10/1 WT SHEET 1 OF 1

1004546 E

1004579 G

REVISIONS			
SYM	DESCRIPTION	DATE	APPROVAL
A	REVISED PER TDRR 05050		
B	REVISED PER TDRR 05189		
C	REVISED PER TDRR 05771		
D	REVISED PER TDRR 07258 DR CHK APPD		
E	REVISED PER TDRR 08013 DR CHK	6/27/64	
F	REVISED PER TDRR 13223 DR CHK	10/9/64	
G	REVISED PER TDRR 23440 DR CHK APPD	11/4/65	

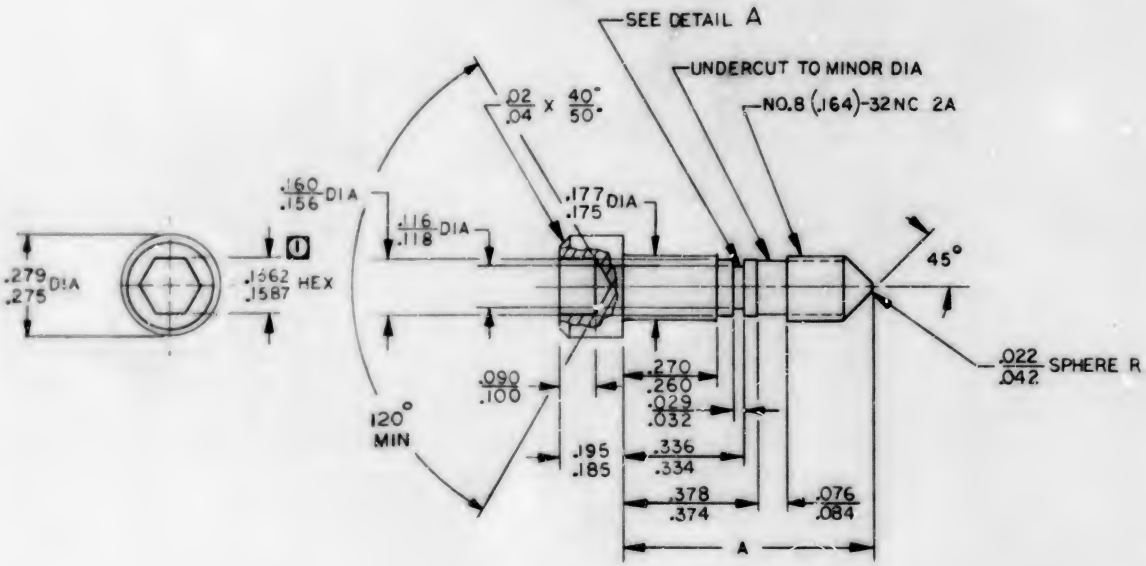

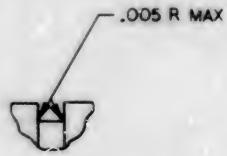

DETAIL A
SCALE 10/1

NOTES

1. MATL: 410 CRES, CLASS 410, COND. A PER QQ-S-763 (HEAD TO BE COLD FORMED)
2. REMOVE BURRS AND SHARP EDGES
3. PASSIVATE PER MIL-F-14072, FINISH E 300, TYPE I
4. INTERPRET DRAWING IN ACCORDANCE WITH STANDARDS PRESCRIBED BY MIL-D-70327
5. (1) DIMENSION CONTROLLED BY ICD MH01-01002-116
6. CONCENTRICITY: ALL DIAMETERS MUST BE WITHIN .005 T.I.R.
7. IDENTIFY PER ND 1002019

PART NO.	DIM A ±.005
1004579-1	.700
1004579-2	.875
1004579-3	.800

QTY REQD	PART OR IDENTIFYING NO.	NOMENCLATURE OR DESCRIPTION	FIND NO.

LIST OF MATERIALS

1003133	1003184
NEXT ASSY	USED ON
APPLICATION	

UNLESS OTHERWISE SPECIFIED DIMENSIONS ARE IN INCHES
TOLERANCES ON
FRACTIONS ± DECIMALS ± ANGLES ±2°
DO NOT SCALE THIS DRAWING

MATERIAL: SEE NOTE 1
HEAT TREATMENT: RC 36-43
FINAL FINISH: SEE NOTE 3

MIT INSTRUMENTATION LAB, CAMBRIDGE, MASS
DWG. NO. CONTRACT
DRAWN DATE 8/1/63
CHECKED 8/1/63
APPROVAL
APPROVAL 8/14/63
NASA APPROVAL
MIT APPROVAL
MIT APPROVAL

MANNED SPACECRAFT CENTER
HOUSTON, TEXAS

SCREW, JACKING

CODE IDENT NO. —
SIZE C
NASA DRAWING NO. 1004579
SCALE 4/1 WT SHEET 1 OF 1

REVISIONS			
SYM	DESCRIPTION	DATE	APPROVAL

WIRING LIST

LEG A FROM	WIRE	TO	REMARKS	LEG B FROM	WIRE	TO	REMARKS
J1-123	1010416-20	J8-28	USE .23/.20 LG OF 1006776-20 SEE DETAIL A	J1-102	1010416-20	J5-44	USE .23/.20 LG OF 1006776-20 SEE DETAIL A
J1-124		J8-111		J1-103		J5-43	
J1-125		J8-127		J1-104		J5-64	
J1-126		J6-48		J1-107		J6-28	
J1-127		J8-126		J1-108		J6-111	
J1-128		J8-89		J1-109		J6-127	
J1-129		J8-86		J1-110		J6-48	
J1-130		J8-107	SEE NOTE 7	J1-111		J6-126	SEE NOTE 7
J1-131		J8-23		J1-112		J6-89	
J1-132		J8-3		J1-113		J6-88	
J1-133		J8-1		J1-114		J6-107	
J1-134		J8-123		J1-115		J6-23	
J1-135		J8-87		J1-116		J6-3	
J1-136		J8-22		J1-117		J6-1	
J1-137	1010416-20	J8-85		J1-118		J6-123	
				J1-119		J6-87	
				J1-120		J6-22	
				J1-121	1010416-20	J6-85	

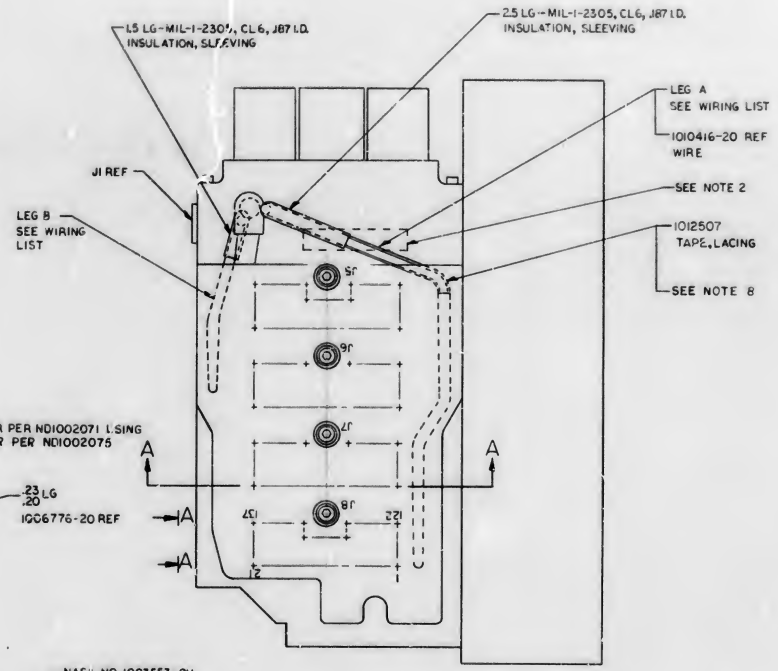

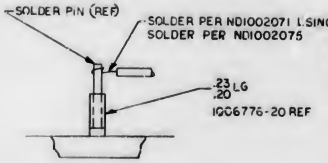

DETAIL A
TYP 33 PLACES

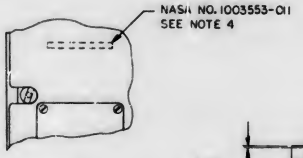

VIEW A-A

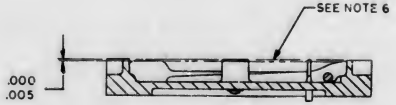

SECTION A-A

NOTES

1. MAKE FROM 1003540 MD1
2. SECURE HARNESS IN INDICATED AREA BY STAKING PER ND1002004 TYPE Y
3. REF RIB 0104032
4. RE-IDENTIFY WITH PART NO. 1003553-011 IN ACCORDANCE WITH RIB0104032
5. INTERPRET DRAWING IN ACCORDANCE WITH STANDARDS PRESCRIBED BY MIL-D-70327
6. ENCAPSULATE INDICATED AREA PER ND1002217
7. REF FOLLOWING TOOLS WHEN REWORKING J1 CONNECTOR:
   - PIN REMOVAL TOOL ——— HUGHES TWO-22 RT-000
   - PIN INSERTION TOOL ——— HUGHES TWO-22 IT-000
   - PIN CRIMPING TOOL ——— HUGHES TWO-00 CH-000
   - PIN LOCATOR TOOL ——— HUGHES TWO-22 LS-000
8. LACE PER ND1002032

PART NO. 1003553-011

QTY REQD	PART OR IDENTIFYING NO.	NOMENCLATURE OR DESCRIPTION	FIND NO.

LIST OF MATERIALS

NEXT ASSY	USED ON
APPLICATION	

UNLESS OTHERWISE SPECIFIED DIMENSIONS ARE IN INCHES
TOLERANCES ON
FRACTIONS * DECIMALS * ANGLES *
DO NOT SCALE THIS DRAWING
MATERIAL
HEAT TREATMENT
FINAL FINISH

BTV INSTRUMENTATION LAB Cambridge, Mass.
DRAWN DATE
CHECKED
APPROVAL
NASA APPROVAL 9-3-2-65
BIT APPROVAL

MANNED SPACECRAFT CENTER HOUSTON, TEXAS

INSTRUCTION DRAWING
FOR RIB NO. 0104032
(AGC DSKY MAIN SYS 20)

CODE IDENT NO. —— SIZE D NASA DRAWING NO. 1004626
SCALE NONE WT SHEET 1 OF 1

MASTER

1004722 A

12306

REVISIONS			
SYM	DESCRIPTION	DATE	APPROVAL
A	REVISED AND UP GRADED TO CLASS A PER TDRR 12586	4 SEP 64	

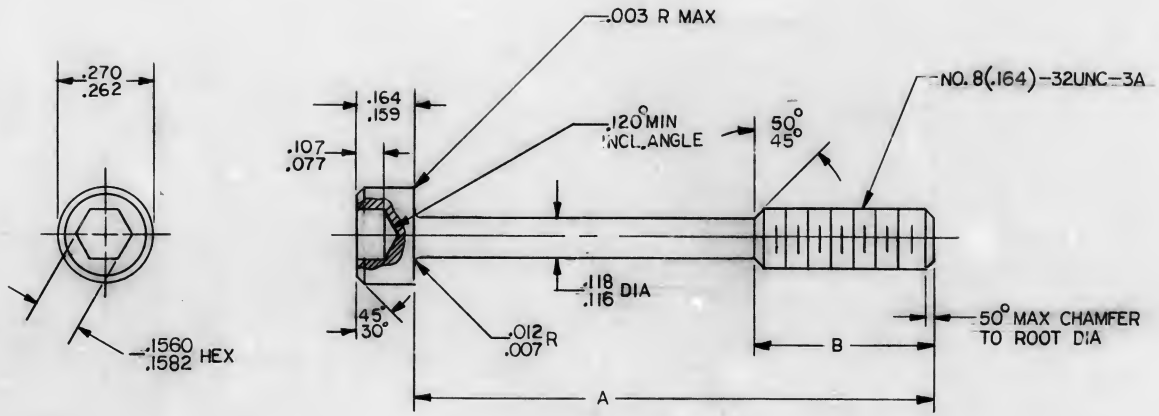

NOTES

1. INTERPRET DRAWING IN ACCORDANCE WITH STANDARDS PRESCRIBED BY MIL-D-70327
2. MATERIAL: 416 SE CRES CLASS 416 SE, COND H_1 PER QQ-S-763
3. HEAT TREAT: 160,000 PSI MIN. TENSILE STRENGTH PER MIL-H-6875
   HARDNESS: ROCKWELL C36-40
4. FINISH: PASSIVATE PER MIL-F-14072 FINISH E 300 TYPE I
5. THREADS TO BE FORMED BY ROLLING
6. SURFACE ROUGHNESS 125 UNLESS OTHERWISE SPECIFIED
7. UNLESS OTHERWISE SPECIFIED SCREW SHALL BE MANUFACTURED IN ACCORDANCE WITH FED SPEC FF-S-86 TYPE VI
8. REMOVE ALL BURRS AND BREAK SHARP EDGES
9. IDENTIFY PER ND 1002019

PART NUMBER	A	B
-1	1.51 1.49	.531 .500
-2	.70 .67	.266 .234

QTY REQD	PART OR IDENTIFYING NO.	NOMENCLATURE OR DESCRIPTION	FIND NO.

LIST OF MATERIALS

NEXT ASSY	USED ON
APPLICATION	

UNLESS OTHERWISE SPECIFIED
DIMENSIONS ARE IN INCHES
TOLERANCES ON
FRACTIONS ± ___ DECIMALS ± ___ ANGLES ± ___
DO NOT SCALE THIS DRAWING
MATERIAL SEE NOTE 2
HEAT TREATMENT SEE NOTE 3
FINAL FINISH SEE NOTE 4

MIT INSTRUMENTATION LAB
CAMBRIDGE, MASS.
DWG. NO. CONTRACT
DRAWN L. Pellicini DATE 21 Aug 64
CHECKED
APPROVAL E. A. Dapper LAD
APPROVAL Eldon C. Hall 27 Aug 64
NASA APPROVAL
MIT APPROVAL

MANNED SPACECRAFT CENTER
HOUSTON, TEXAS

SCREW, CAPTIVE
ROPE COVER

CODE IDENT NO. ___ SIZE C NASA DRAWING NO. 1004722
SCALE 4/1 WT ___ SHEET 1 OF 1

MASTER

REVISIONS 14006

SYM	ZONE	DESCRIPTION	DR	CHK	DATE	APPROVED
A		REVISED PER TDRR 17744	RAO	RAB	4/24/65	[illegible]

DASH NO.	A	B
-000	.40	.19
-001	.29	.12

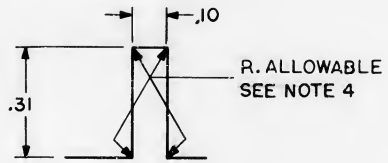

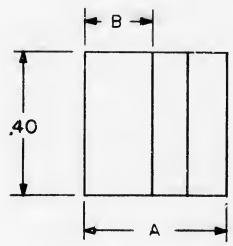

NOTES
1. INTERPRET DRAWING IN ACCORDANCE WITH STANDARDS PRESCRIBED BY MIL-D-70327
2. MATERIAL: FILM .006/.008 THICK PER L-F-340, TYPE IB, CLASS 2, STYLE IA
3. IDENTIFY PER ND 1002019
4. BREAKAGE OF FILM SHALL BE CAUSE FOR REJECTION

QTY REQD	PART OR IDENTIFYING NO.	MATERIAL OR NOTES	NOMENCLATURE OR DESCRIPTION	FIND NO.

LIST OF MATERIALS

1003704	
NEXT ASSY	USED ON
APPLICATION	

UNLESS OTHERWISE SPECIFIED
DIMENSIONS ARE IN INCHES
CAPACITOR VALUES ARE IN μf
RESISTOR VALUES ARE IN OHMS
TOLERANCES ON
FRACTIONS ± —— DECIMALS ±.02 ANGLES ± ——
DO NOT SCALE THIS DRAWING

MATERIAL
SEE NOTE 2

MIT INSTRUMENTATION LAB
CAMBRIDGE, MASS.

MANNED SPACECRAFT CENTER
HOUSTON, TEXAS

DRAWN A. Addazio Jr. 13 NOV. 64
CHECKED R. Bisbeni 3 NOV 64
APPROVED
APPROVED E. Hall 11/12/64
APPROVED MIT W. Kupfer 4 Nov 64
APPROVED MSC W. J. Ellis 11-4-64
DATE

INSULATOR

CODE IDENT NO. 80230
SIZE C
DRAWING NO. 1004738
SCALE 4/1
SHEET 1 OF 1

REVISIONS			
SYM	DESCRIPTION	DATE	APPROVAL

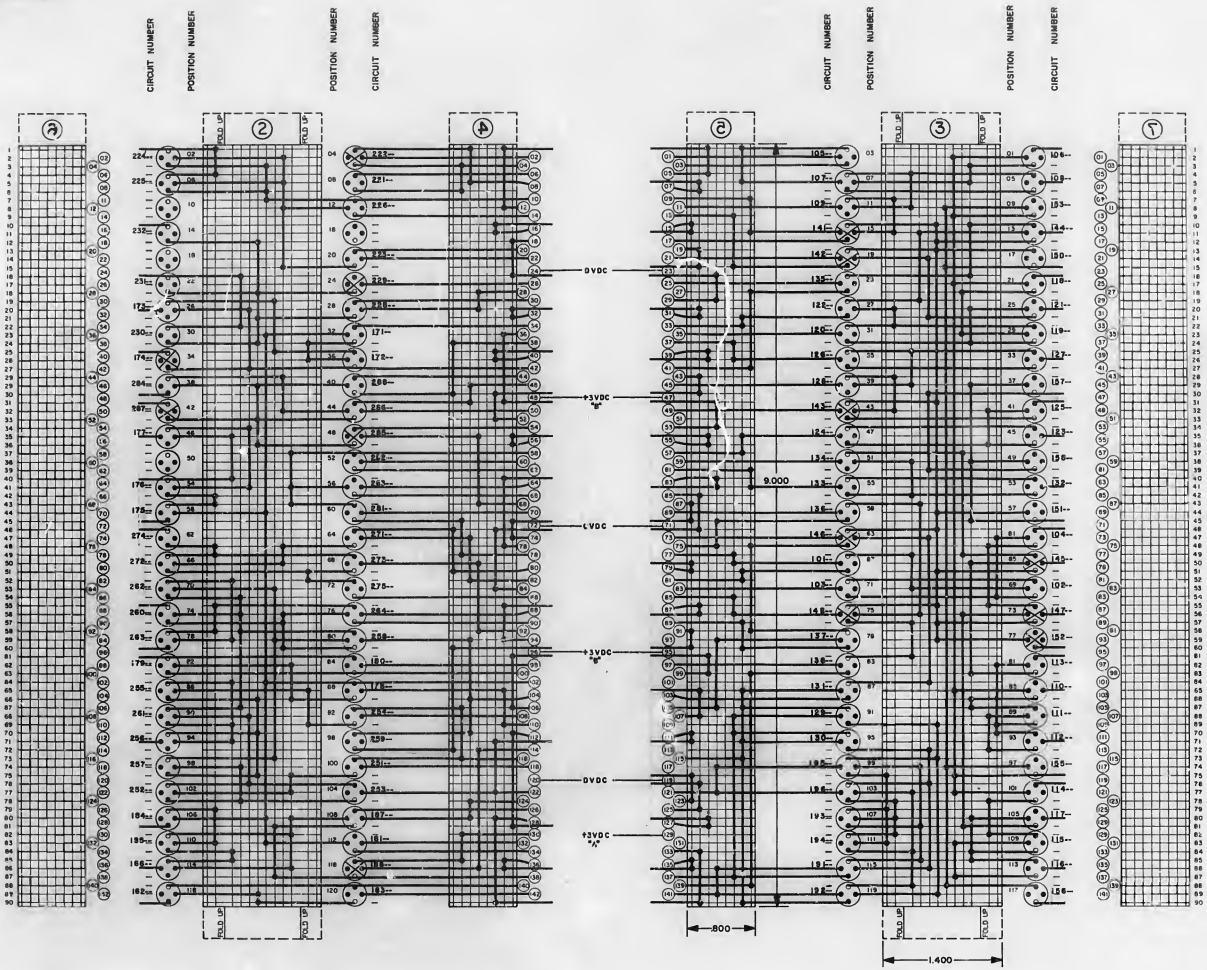

REF. DWG.
1. LOGIC FLOW DIAGRAM 1OC4170

NOTES-

1- INTERPRET DRAWING IN ACCORDANCE WITH STANDARDS PRESCRIBED BY MIL-D-70327

2- DENOTES "FAN IN" CIRCUIT (+3V DC LEAD NOT CONNECTED)

3- DENOTES "NOR" CIRCUIT

REFER TO DWG. NO. 1C06013

QTY REQD	PART OR IDENTIFYING NO.	NOMENCLATURE OR DESCRIPTION	FIND NO.
		LIST OF MATERIALS	

NEXT ASSY	USED ON	APPLICATION	

UNLESS OTHERWISE SPECIFIED DIMENSIONS ARE IN INCHES
TOLERANCES ON
FRACTIONS ± DECIMALS ± ANGLES ±
DO NOT SCALE THIS DRAWING
MATERIAL SEE NOTE 5
HEAT TREATMENT ±
FINAL FINISH ±

MIT INSTRUMENTATION LAB CAMBRIDGE MASS
CONTRACT
DWG NO
DRAWN Mahony DATE 2-7-63
CHECKED
APPROVAL
APPROVAL
NASA APPROVAL W J Klunz 6-1-63
MIT APPROVAL

MANNED SPACECRAFT CENTER HOUSTON TEXAS

WIRING DIAGRAM
LOGIC MODULE NO.

CODE IDENT NO | SIZE E | NASA DRAWING NO 1006120
SCALE 2/1 | WT | SHEET 1 OF 1

1006120

REVISIONS 02377

QTY	DESCRIPTION	DATE	APPROVAL

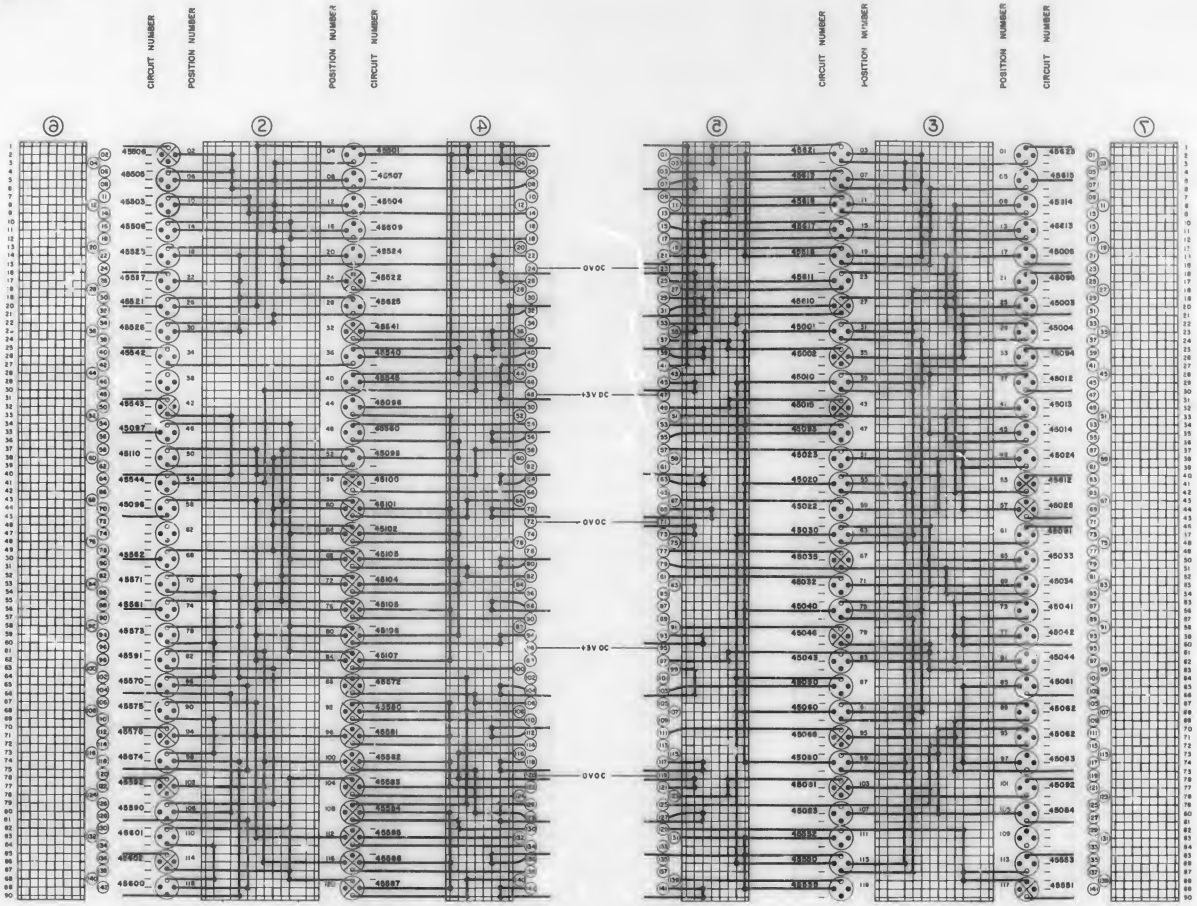

REF. DWG.
LLOGIC FLOW DIAGRAM 1006541

NOTES–

1– INTERPRET DRAWING IN ACCORDANCE WITH STANDARDS PRESCRIBED BY MIL-D-70327

2– DENOTES "FAN IN" CIRCUIT (+3V DC LEAD NOT CONNECTED)

3– DENOTES "NOR" CIRCUIT

REFER TO DWG. NO 1006013

QTY REQD	PART OR IDENTIFYING NO	NOMENCLATURE OR DESCRIPTION	F.NO NO
		LIST OF MATERIALS	

		UNLESS OTHERWISE SPECIFIED DIMENSIONS ARE IN INCHES TOLERANCES ON FRACTIONS ± DECIMALS ± ANGLES ± DO NOT SCALE THIS DRAWING MATERIAL SEE NOTE 5 HEAT TREATMENT — FINAL FINISH —	MIT INSTRUMENTATION LAB Cambridge Mass. ENG. NO. 1002067 DRAWN C. D. Lee DATE 1-8-68 CHECKED APPROVAL APPROVAL NASA APPROVAL 8/17/67 MIT APPROVAL	MANNED SPACECRAFT CENTER HOUSTON TEXAS SIGNAL WIRING DIAGRAM LOGIC MODULE NO. A-35 CODE IDENT NO SIZE E NASA DRAWING NO 1006121 SCALE 2/1 WT — SHEET 1 OF 1
NEXT ASSY	USED ON			
APPLICATION				

1006121

REVISIONS			
SYM	DESCRIPTION	DATE	APPROVAL

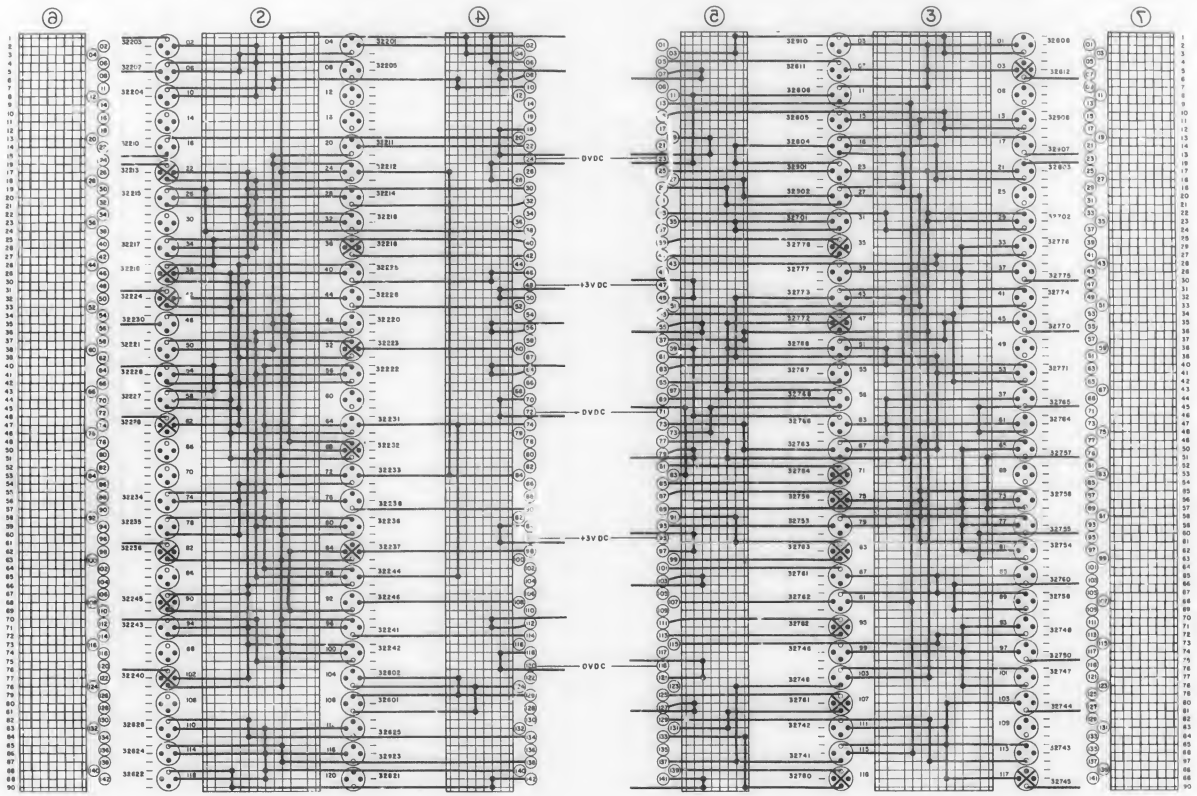

REF. DWG.
LLOGIC FLOW DIAGRAM 1006542

NOTES-

1- INTERPRET DRAWING IN ACCORDANCE WITH STANDARDS PRESCRIBED BY MIL-D-70327

2- DENOTES "FAN IN" CIRCUIT (+3V DC LEAD NOT CONNECTED)

3- DENOTES "NOR" CIRCUIT

REF. DWG. 1006013

QTY REQD	PART OR IDENTIFYING NO	NOMENCLATURE OR DESCRIPTION	FIND NO
		LIST OF MATERIALS	

UNLESS OTHERWISE SPECIFIED DIMENSIONS ARE IN INCHES
TOLERANCES ON
FRACTIONS DECIMALS ANGLES
DO NOT SCALE THIS DRAWING
MATERIAL
HEAT TREATMENT
FINAL FINISH
NEXT ASSY USED ON
APPLICATION

MIT INSTRUMENTATION LAB
CAMBRIDGE 39 MASS
DRAWN DATE
CHECKED
APPROVAL
APPROVAL
NASA APPROVAL
MIT APPROVAL

MANNED SPACECRAFT CENTER
HOUSTON TEXAS

SIGNAL WIRING DIAGRAM

LOGIC MODULE NO. A18

CODE IDENT NO | SIZE E | NASA DRAWING NO 1006122

SCALE | WT | SHEET 1 OF 1

1006122

QTY	DESCRIPTION	DATE	APPROVED
A	REVISED PER TDER		

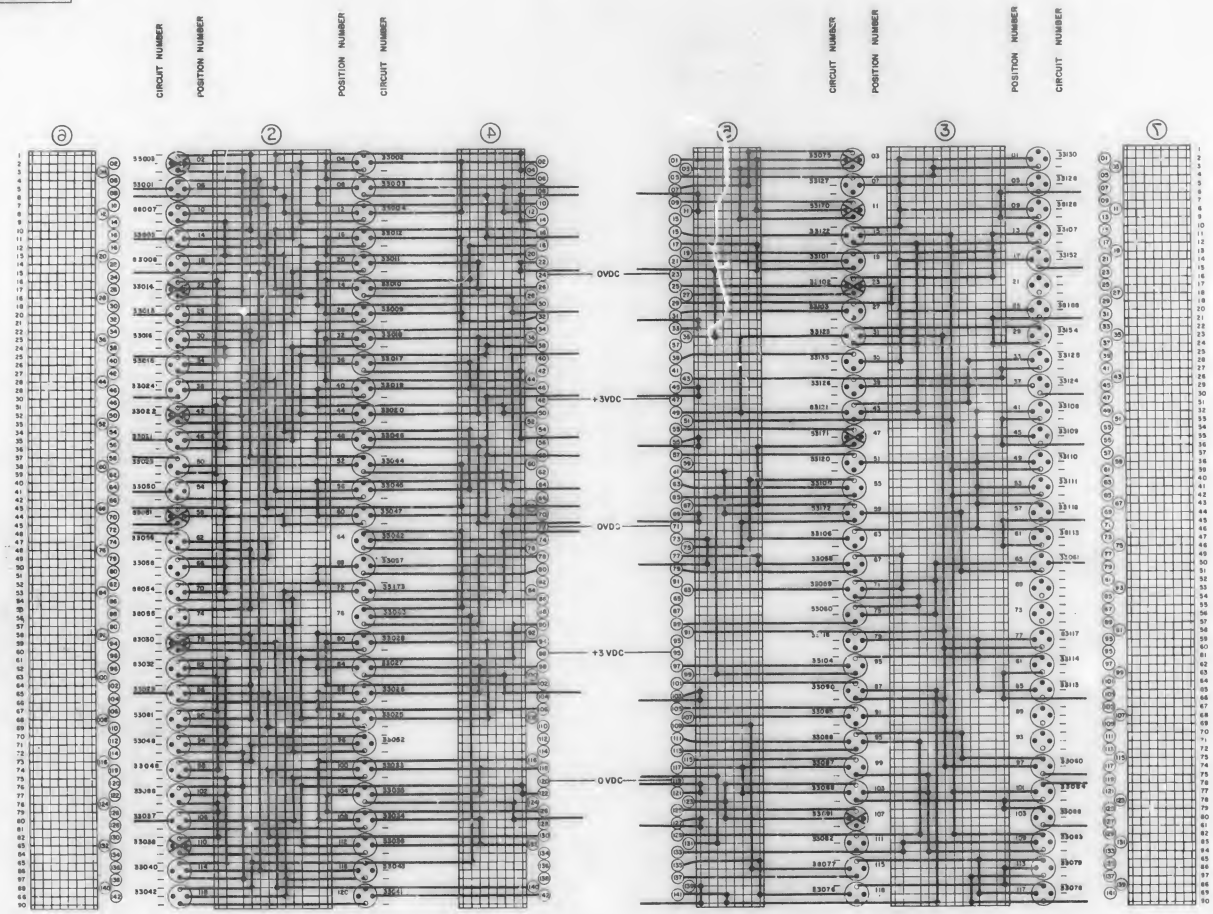

REF DWG
1. LOGIC FLOW DIAGRAM 1006543

NOTES—

1—INTERPRET DRAWING IN ACCORDANCE WITH STANDARDS PRESCRIBED BY MIL-D-70327

2—DENOTES "FAN IN" CIRCUIT (+3VDC LEAD NOT CONNECTED)

3—DENOTES "NOR" CIRCUIT

REF. DWG. 1006013

QTY REQD	PART OR IDENTIFYING NO	NOMENCLATURE OR DESCRIPTION	FIND NO
		LIST OF MATERIALS	

UNLESS OTHERWISE SPECIFIED DIMENSIONS ARE IN INCHES
TOLERANCES ON FRACTIONS DECIMAL ± ANGLES
DO NOT SCALE THIS DRAWING
MATERIAL
HEAT TREATMENT
FINAL FINISH

NEXT ASSY | USED ON
APPLICATION

MIT INSTRUMENTATION LAB
CAMBRIDGE MASS
CONTRACT
DRAWN | DATE
CHECKED | DATE 12-23-69
APPROVAL
APPROVAL
NASA APPROVAL
MIT APPROVAL

MANNED SPACECRAFT CENTER
HOUSTON TEXAS

SIGNAL WIRING DIAGRAM
LOGIC MODULE NO. A17

CODE IDENT NO | SIZE E | NASA DRAWING 1006123
SCALE | WT | SHEET 1 OF 1

1006123 A

REVISIONS			
QTY	REVISION SYMBOL	DATE	APPROVAL
A	REVISED PER TDRR		
B	REVISED PER TDRR		

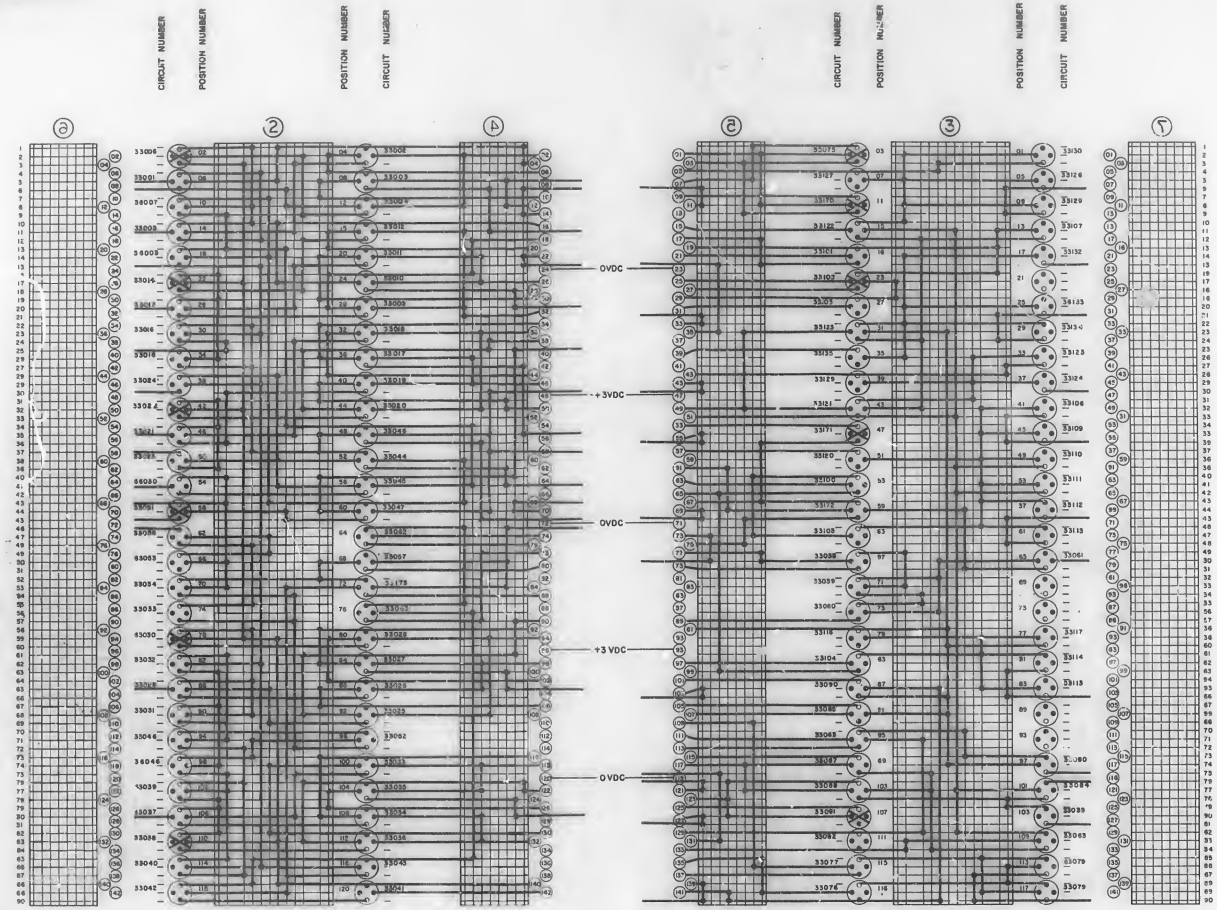

REF DWG
1. LOGIC FLOW DIAGRAM 1006543

NOTES–

1 – INTERPRET DRAWING IN ACCORDANCE WITH STANDARDS PRESCRIBED BY MIL-D-70327

2 – DENOTES "FAN IN" CIRCUIT (+3VDC LEAD NOT CONNECTED)

3 – DENOTES "NOR" CIRCUIT

REF. DWG. 1006013

QTY REQD	PART OR IDENTIFYING NO	NOMENCLATURE OR DESCRIPTION	FIND NO
		LIST OF MATERIALS	

UNLESS OTHERWISE SPECIFIED DIMENSIONS ARE IN INCHES
TOLERANCES ON
FRACTIONS DECIMALS ANGLES
DO NOT SCALE THIS DRAWING
MATERIAL
HEAT TREATMENT
FINAL FINISH
PART ASSY USED ON
APPLICATION

M I T
INSTRUMENTATION LAB
CAMBRIDGE MASS
DRAWN DATE
CHECKED
APPROVAL
APPROVAL
NASA APPROVAL
MIT APPROVAL

MANNED SPACECRAFT CENTER
HOUSTON TEXAS

SIGNAL WIRING DIAGRAM
LOGIC MODULE NO. A17

CODE IDENT NO. | SIZE E | NASA DWG. 1006123
SCALE | WT | SHEET 1 of 1

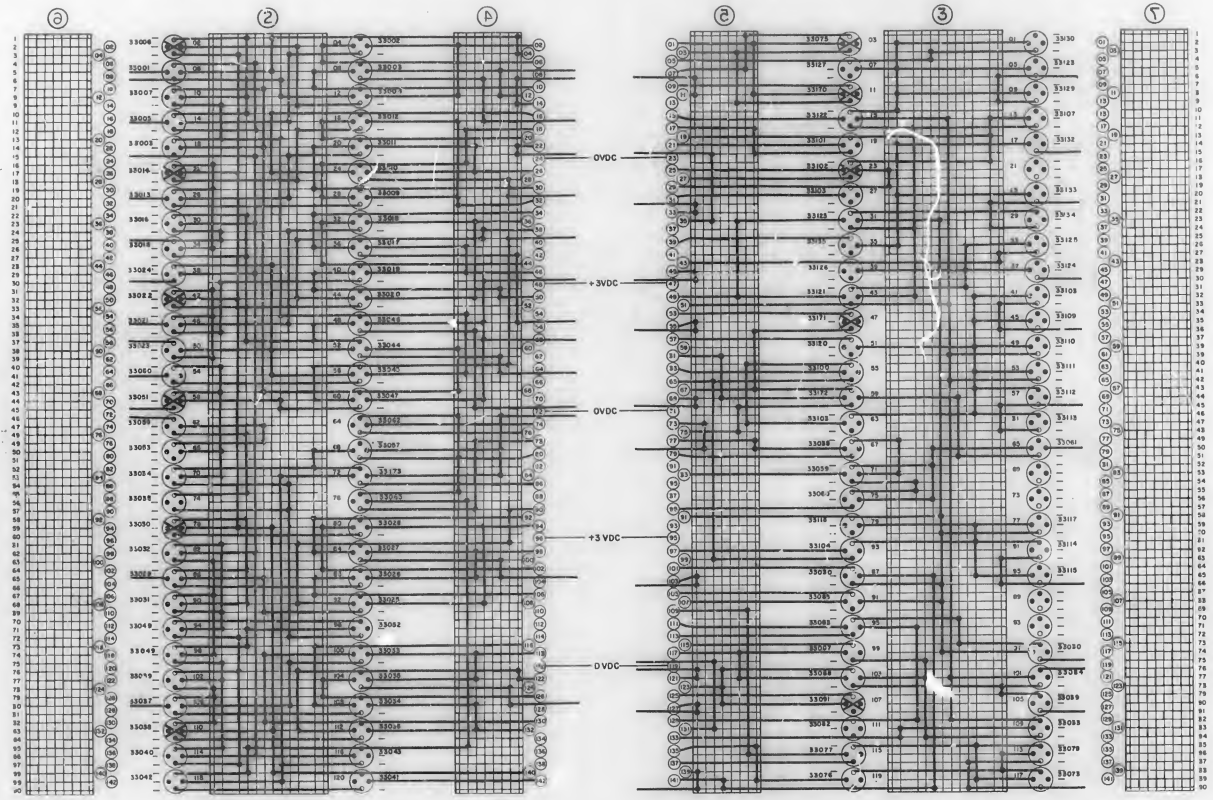

REF DWG
1. LOGIC FLOW DIAGRAM 1006543

NOTES:-

1 – INTERPRET DRAWING IN ACCORDANCE WITH STANDARDS PRESCRIBED BY MIL-D-70327

2 – DENOTES "FAN IN" CIRCUIT (+3VDC LEAD NOT CONNECTED)

3 – DENOTES "NOR" CIRCUIT

} REF DWG. 1006013

QTY REQD	PART OR IDENTIFYING NO	NOMENCLATURE OR DESCRIPTION	FIND NO
		LIST OF MATERIALS	

UNLESS OTHERWISE SPECIFIED DIMENSIONS ARE IN INCHES
TOLERANCES ON FRACTIONS DECIMALS ANGLES
DO NOT SCALE THIS DRAWING
MATERIAL
HEAT TREATMENT
FINAL FINISH
NEXT ASSY USED ON
APPLICATION

M I T INSTRUMENTATION LAB Cambridge Mass

DRAWN DATE 8-23-65
CHECKED CC 8-23-65
APPROVAL
APPROVAL
NASA APPROVAL 9-23-65
MIT APPROVAL

MANNED SPACECRAFT CENTER
HOUSTON TEXAS

SIGNAL WIRING DIAGRAM
LOGIC MODULE NO. A17

CODE IDENT NO | SIZE E | NASA DRAWING 1006123
SCALE | WT | SHEET 1 OF 1

1006123

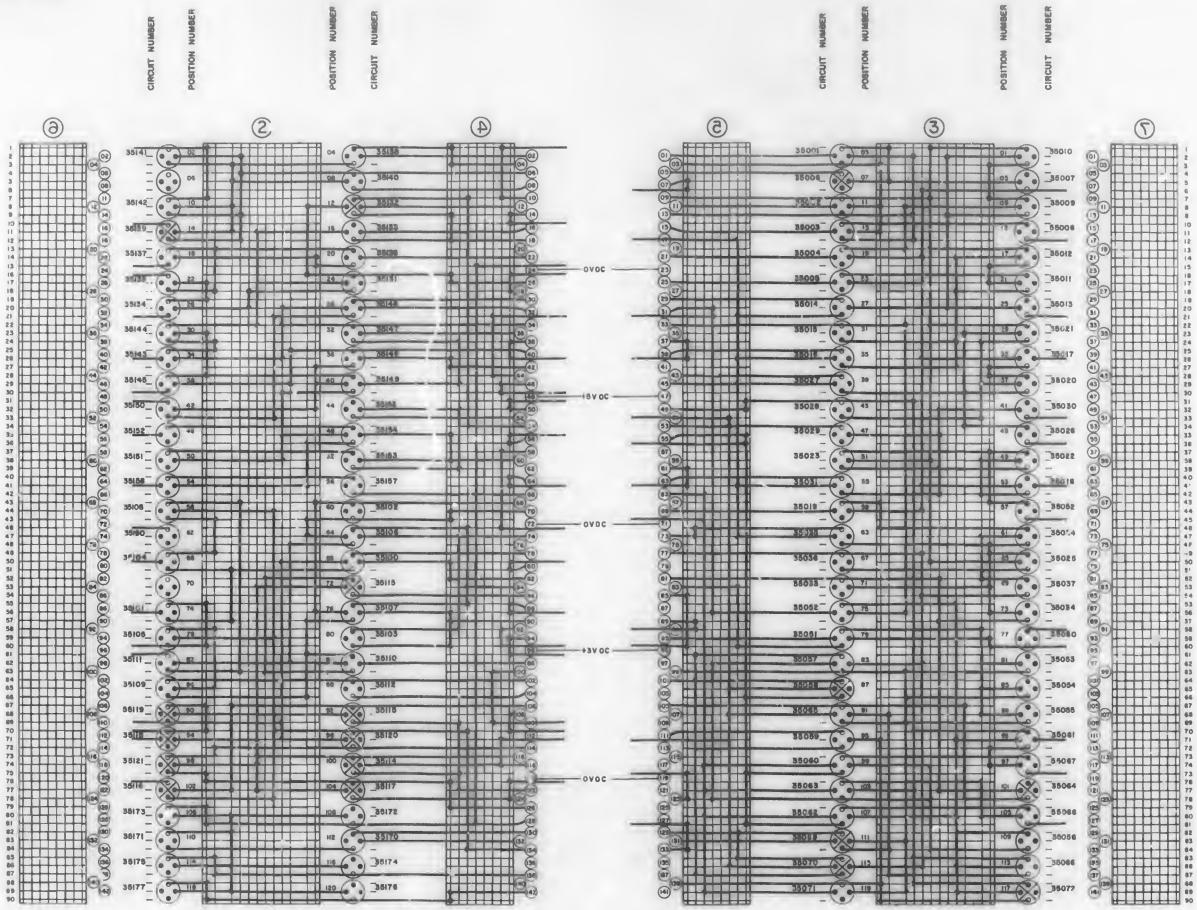

REF. DWG.
LOGIC FLOW DIAGRAM 1006544

NOTES-

1- INTERPRET DRAWING IN ACCORDANCE WITH STANDARDS PRESCRIBED BY MIL-D-70327

2- DENOTES "FAN IN" CIRCUIT (+3V DC LEAD NOT CONNECTED)

3- DENOTES "NOR" CIRCUIT

REF. DWG. 1006013

QTY REQD	PART OR IDENTIFYING NO	NOMENCLATURE OR DESCRIPTION	FIND NO
		LIST OF MATERIALS	

UNLESS OTHERWISE SPECIFIED DIMENSIONS ARE IN INCHES
TOLERANCES ON FRACTIONS ± DECIMALS ± ANGLES ±
DO NOT SCALE THIS DRAWING
MATERIAL SEE NOTE 5
HEAT TREATMENT
FINAL FINISH
NEXT ASSY | USED ON | APPLICATION

MIT INSTRUMENTATION LAB Cambridge Mass

MANNED SPACECRAFT CENTER HOUSTON TEXAS

DRAWN | DATE
CHECKED
APPROVAL
APPROVAL
NASA APPROVAL 5/21/69
MIT APPROVAL 5/21/69

SIGNAL WIRING DIAGRAM
LOGIC MODULE NO. A-27

CODE IDENT NO | SIZE E | NASA DRAWING NO 1006124
SCALE 2/1 | WT. | SHEET 1 OF 1

1006124

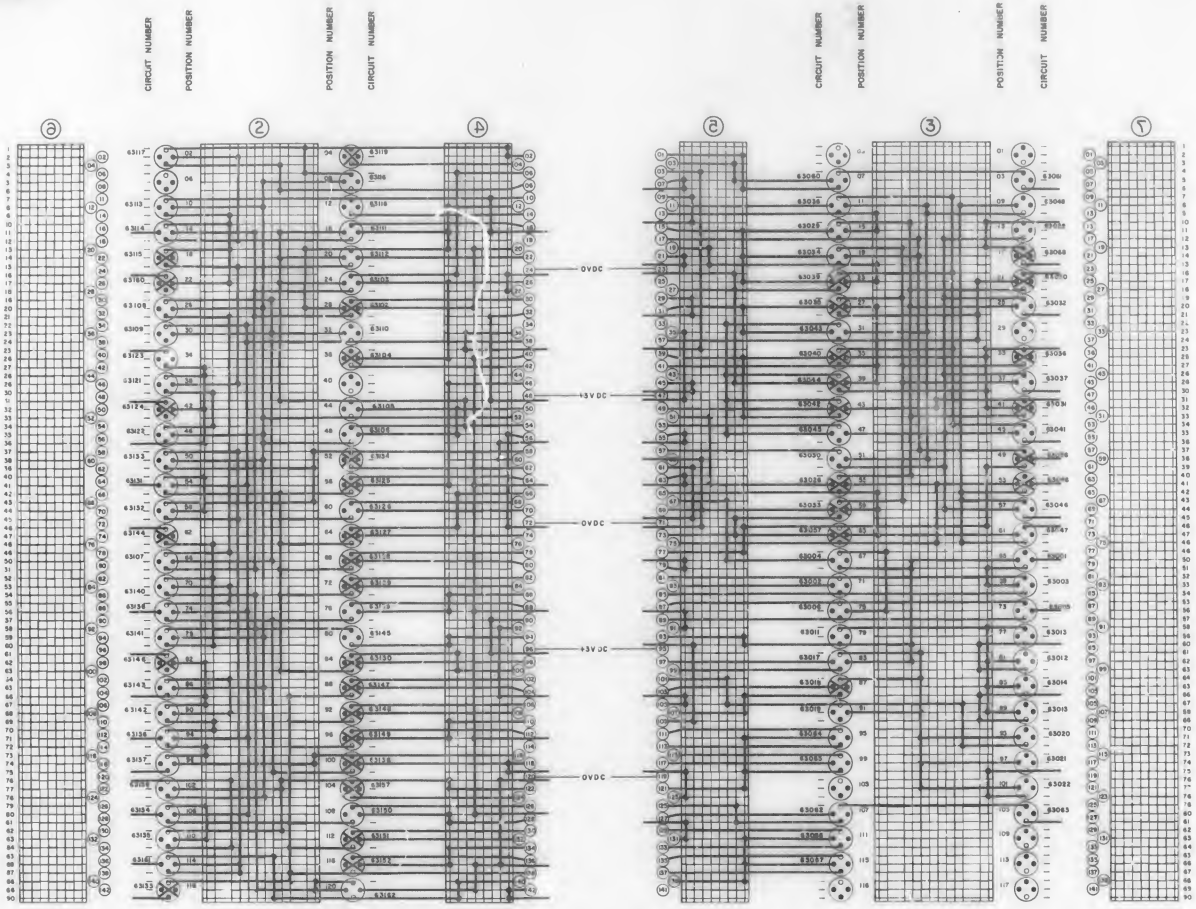

NOTES –

1 – INTERPRET DRAWING IN ACCORDANCE WITH STANDARDS PRESCRIBED BY MIL-D-70327

2 – DENOTES "FAN IN" CIRCUIT (+3V DC LEAD NOT CONNECTED)

3 – DENOTES "NOR" CIRCUIT

REF. DWG. 1006013

REF. DWG.
LLOGIC FLOW DIAGRAM 1006546

F REQD	PART OR IDENTIFYING NO	NOMENCLATURE OR DESCRIPTION	FIND NO
		LIST OF MATERIALS	

UNLESS OTHERWISE SPECIFIED DIMENSIONS ARE IN INCHES
TOLERANCES ON FRACTIONS ± DECIMAL ± ANGLES ±
DO NOT SCALE THIS DRAWING
MATERIAL SEE NOTE 5
HEAT TREATMENT
FINAL FINISH
NEXT ASSY | USED ON
APPLICATION

MIT INSTRUMENTATION LAB
Cambridge, Mass.

MANNED SPACECRAFT CENTER
HOUSTON TEXAS

DRAWN DATE 8-19-65
CHECKED
APPROVAL
APPROVAL
NASA APPROVAL
MIT APPROVAL

SIGNAL WIRING DIAGRAM
LOGIC MODULE NO. A-32

CODE IDENT NO | SIZE E | NASA DRAWING NO 1006126
SCALE 2/1 | WT | SHEET 1 OF 8

1006126

SYM	DESCRIPTION	DATE	APPROVAL
A	REVISED PER TDRR 0-342		

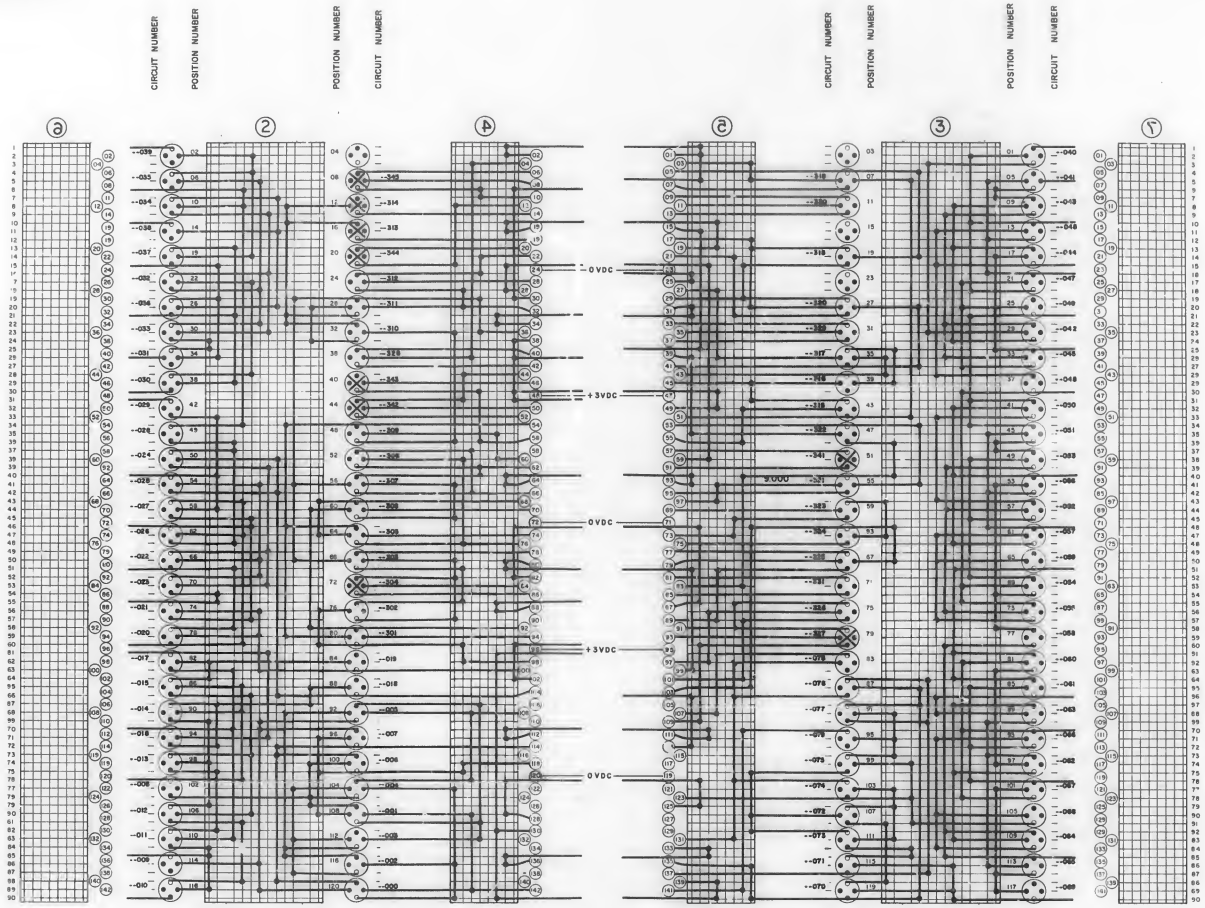

REF. DWG.

1. LOGIC FLOW DIAGRAM 1006547

NOTES-

1. INTERPRET DWG IN ACCORDANCE WITH STANDARDS PRESCRIBED BY MIL-D-70327
2. DENOTES "FAN IN" CIRCUIT (+3VDC LEAD NOT CONNECTED)
3. DENOTES "NOR" CIRCUIT

REFER TO DWG. NO. 1006013

QTY REQD	PART OR IDENTIFYING NO	NOMENCLATURE OR DESCRIPTION	FIND NO
		LIST OF MATERIALS	

UNLESS OTHERWISE SPECIFIED DIMENSIONS ARE IN INCHES TOLERANCES ON FRACTIONS DECIMAL ANGLES	MIT INSTRUMENTATION LAB CAMBRIDGE MASS.
DO NOT SCALE THIS DRAWING	DRAWN DATE 8-7-63
MATERIAL SEE NOTE 5	CHECKED
HEAT TREATMENT	APPROVAL
FINAL FINISH	NASA APPROVAL
NEXT ASSY / USED ON	MIT APPROVAL
APPLICATION	

MANNED SPACECRAFT CENTER
HOUSTON TEXAS

SIGNAL WIRING DIAGRAM

LOGIC MODULE NO. A33-34

CODE IDENT NO	SIZE	NASA DRAWING NO
	E	1006127
SCALE 2/1	WT	SHEET 1 OF 1

1006127

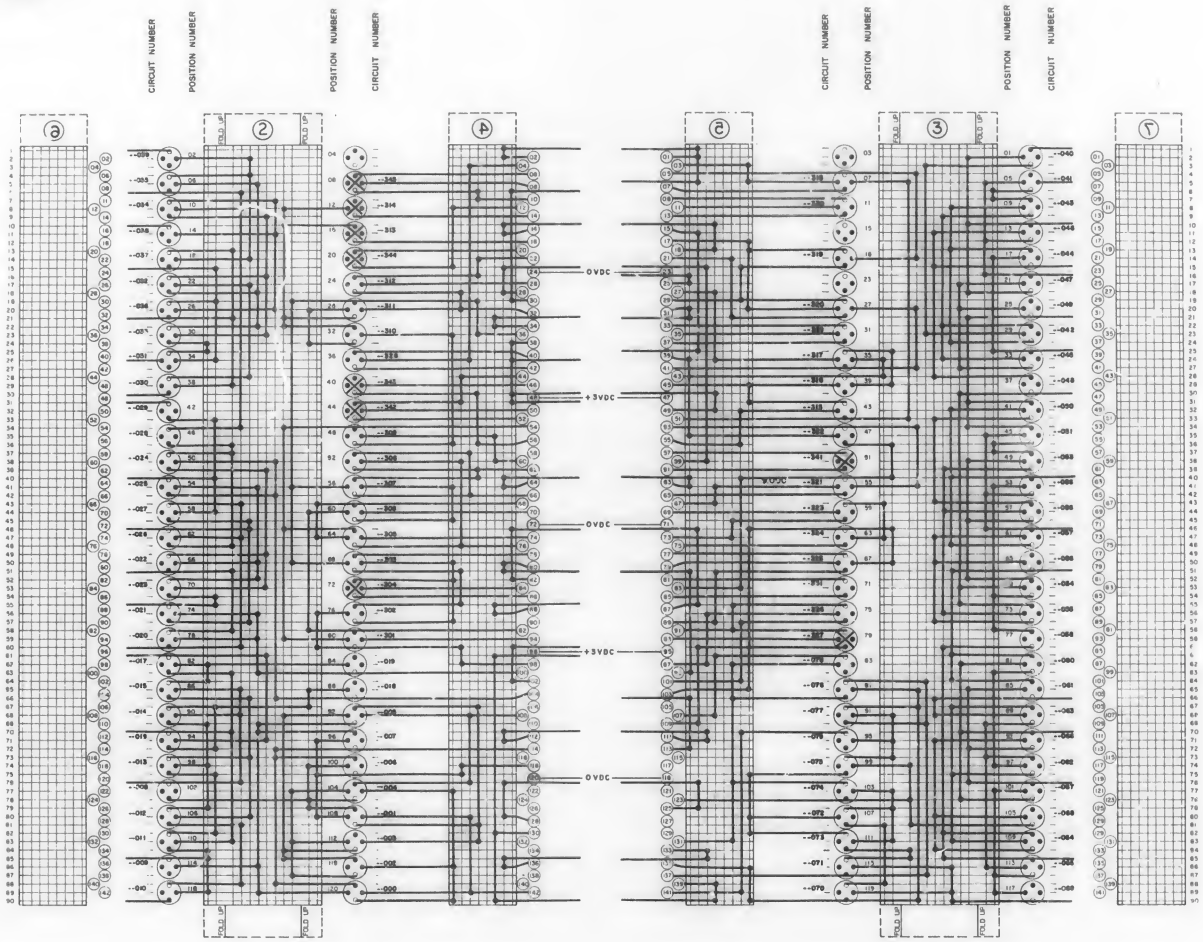

REF. DWG.
1. LOGIC FLOW DIAGRAM 1006547

NOTES-

1. INTERPRET DWG IN ACCORDANCE WITH STANDARDS PRESCRIBED BY MIL-D-70327
2. DENOTES "FAN IN" CIRCUIT (+3VDC LEAD NOT CONNECTED) } REFER TO DWG. NO. 1006013
3. DENOTES "NOR" CIRCUIT

QTY REQD	PART OR IDENTIFYING NO.	NOMENCLATURE OR DESCRIPTION	CODE NO.
		LIST OF MATERIALS	

UNLESS OTHERWISE SPECIFIED DIMENSIONS ARE IN INCHES TOLERANCES ON FRACTIONS DECIMALS ANGLES	MIT INSTRUMENTATION LAB (CAMBRIDGE, MASS.)	MANNED SPACECRAFT CENTER HOUSTON, TEXAS
DO NOT SCALE THIS DRAWING	DR. No. / DATE	SIGNAL WIRING DIAGRAM LOGIC MODULE NO.
SEE NOTE 5	DRAWN / DATE 8-7-63	
HEAT TREATMENT	CHECKED	
FINAL FINISH	APPROVAL	
NEXT ASSY / USED ON	NASA APPROVAL	TECH IDENT NO. / SIZE E / NASA DRAWING NO. 1006127
APPLICATION	MIT APPROVAL	SCALE 2/1 / WT / SHEET 1 OF 1

1006127

REVISIONS			
SYM	DESCRIPTION	DATE	APPROVAL

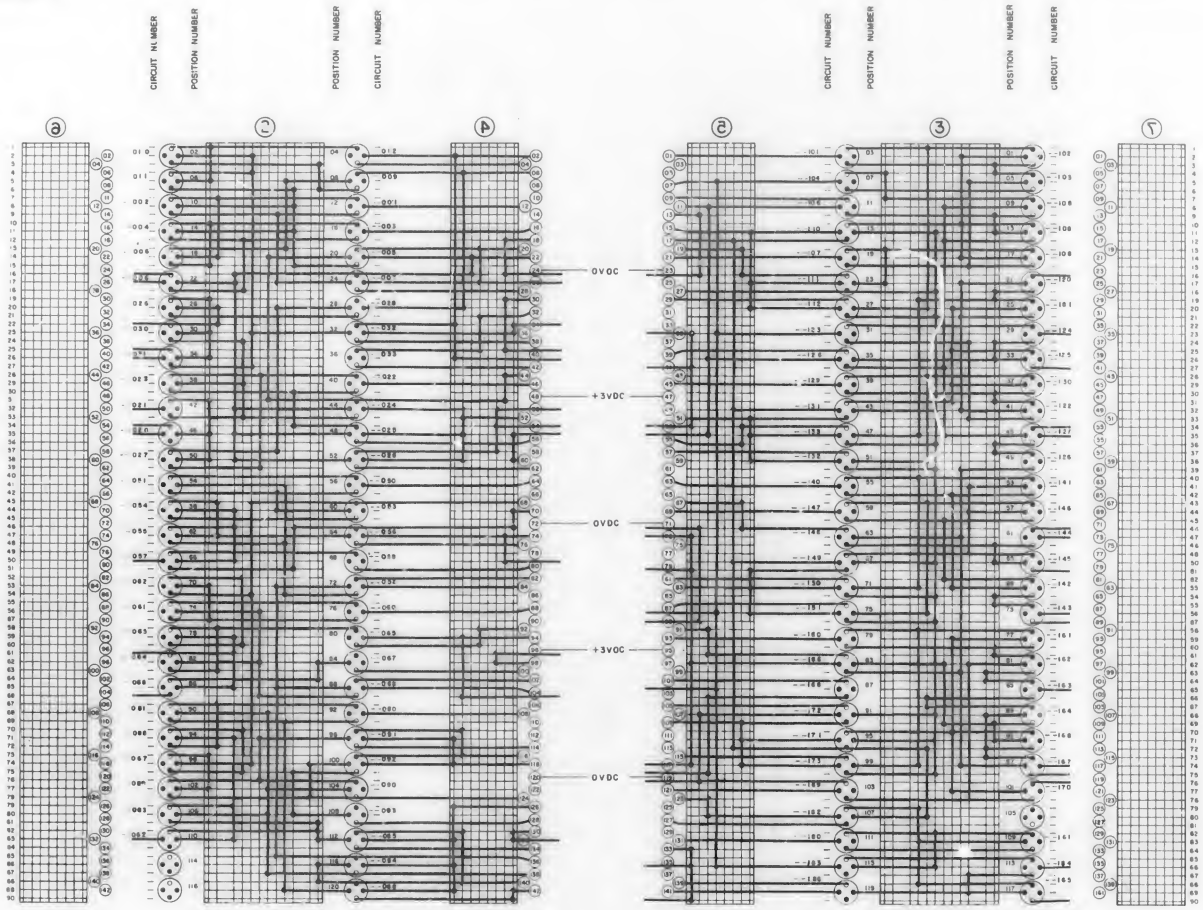

NOTES –

1. INTERPRET DRAWING IN ACCORDANCE WITH STANDARDS PRESCRIBED BY MIL-D-70327
2. DENOTES "FAN IN" CIRCUIT (+3VDC LEAD NOT CONNECTED)
3. DENOTES "NOR" CIRCUIT

} REFER TO DWG NO. 1006013

REF DWG.

1. LOGIC FLOW DIAGRAM 1006548

QTY REQ	PART OR IDENTIFYING NO.	NOMENCLATURE OR DESCRIPTION	FIND NO.
		LIST OF MATERIALS	

	UNLESS OTHERWISE SPECIFIED DIMENSIONS ARE IN INCHES TOLERANCES ON FRACTIONS DECIMALS ANGLES DO NOT SCALE THIS DRAWING MATERIAL SEE NOTE 5 HEAT TREATMENT FINAL FINISH	BELL INSTRUMENTATION LAB CAMBRIDGE MASS. DRAWN CHECKED APPROVAL APPROVAL NASA APPROVAL MIT APPROVAL	MANNED SPACECRAFT CENTER HOUSTON TEXAS SIGNAL WIRING DIAGRAM LOGIC MODULE NO. CODE IDENT NO. E SIZE NASA DRAWING NO. 1006128 SCALE 2/1 WT SHEET 1 OF 1
NEXT ASSY USED ON APPLICATION			

1006128

REVISIONS			
SYM	DESCRIPTION	DATE	APPROVAL

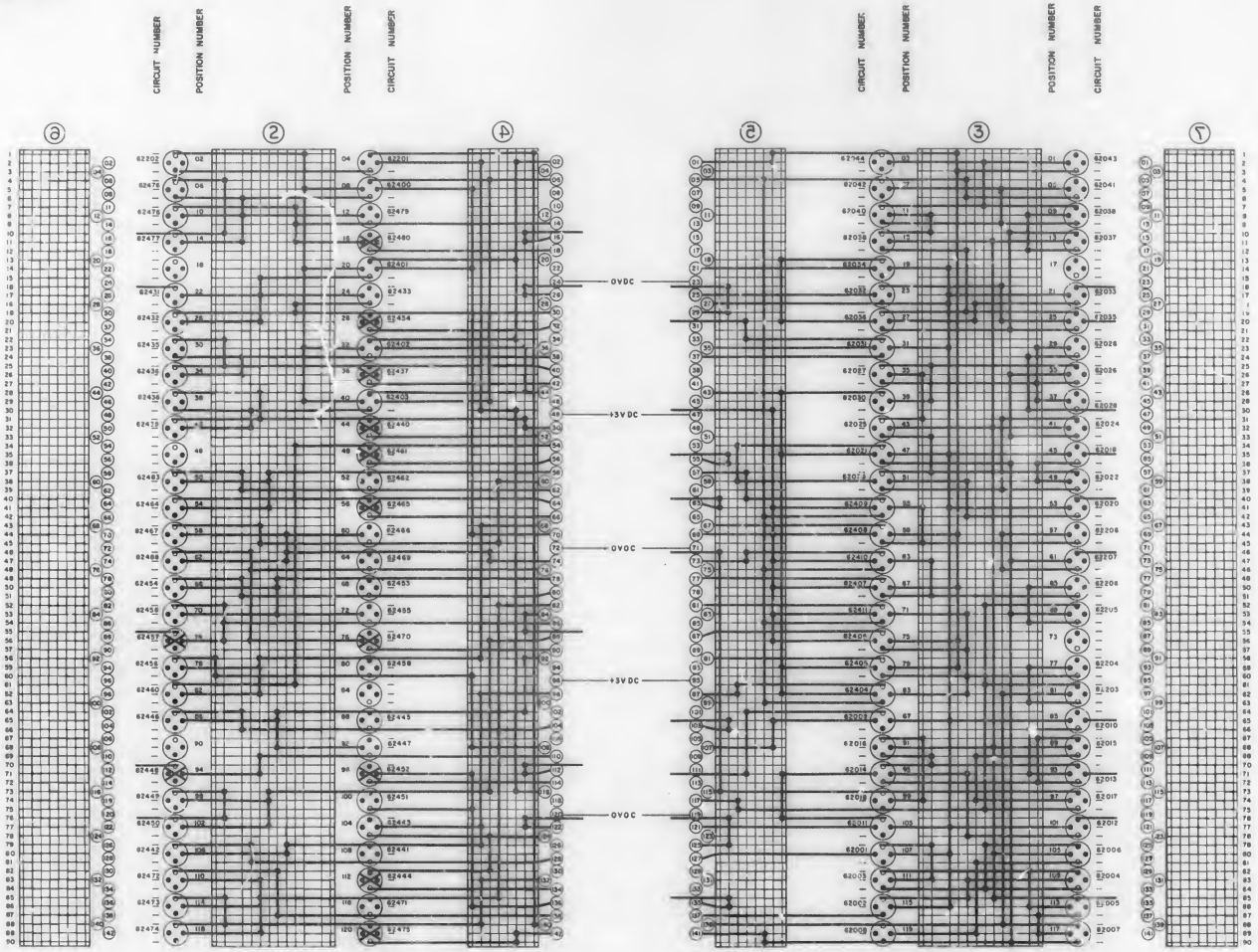

REF. DWG.
LLOGIC FLOW DIAGRAM 1006549

NOTES-

1- INTERPRET DRAWING IN ACCORDANCE WITH STANDARDS PRESCRIBED BY MIL-D-70327

2- DENOTES "FAN IN" CIRCUIT (+3V DC LEAD NOT CONNECTED)

3- DENOTES "NOR" CIRCUIT

} REF. DWG. 1006013

QTY REQD	PART OR IDENTIFYING NO	NOMENCLATURE OR DESCRIPTION	FIND NO
		LIST OF MATERIALS	

UNLESS OTHERWISE SPECIFIED DIMENSIONS ARE IN INCHES
TOLERANCES ON
FRACTIONS ± DECIMALS ± ANGLES ±
DO NOT SCALE THIS DRAWING
MATERIAL SEE NOTE 5
HEAT TREATMENT —
FINISH —
NEXT ASSY | USED ON
APPLICATION

M I T
INSTRUMENTATION LAB
Cambridge Mass
DRAWN DATE
CHECKED
APPROVAL
APPROVAL
NASA APPROVAL
MIT APPROVAL

MANNED SPACECRAFT CENTER
HOUSTON TEXAS

SIGNAL WIRING DIAGRAM LOGIC MODULE NO. A-26

CODE IDENT NO | SIZE E | NASA DRAWING NO 1006129
SCALE 2/1 | WT | SHEET | OF

REF DWG

SIGNAL WIRING DIAGRAM
LOGIC MODULE NO A-77

100

REVISIONS			
SYM	DESCRIPTION	DATE	APPROVAL

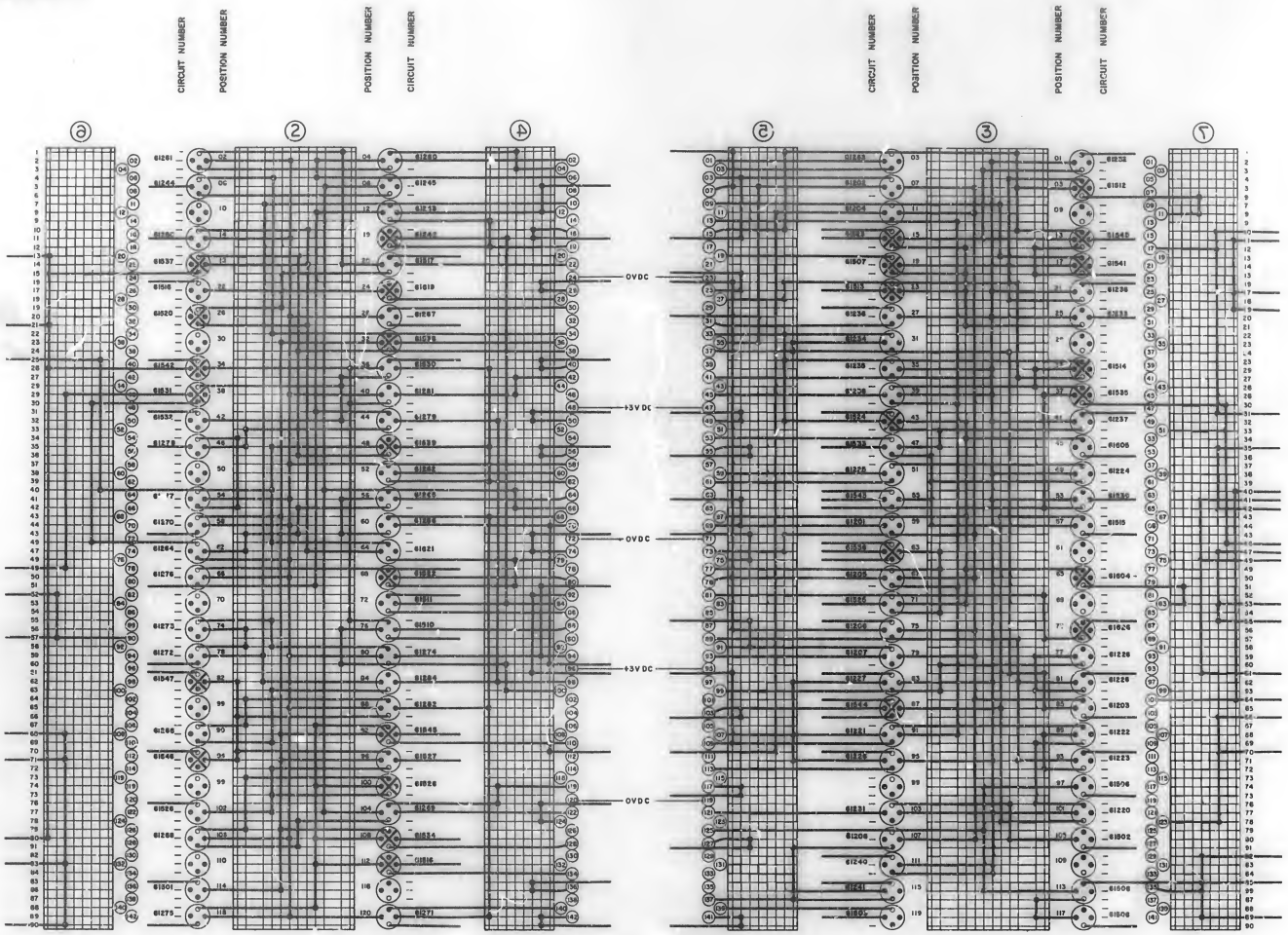

NOTES-

1- INTERPRET DRAWING IN ACCORDANCE WITH STANDARDS PRESCRIBED BY MIL-D-70327

2- DENOTES "FAN IN" CIRCUIT (+3V DC LEAD NOT CONNECTED)

3- DENOTES "NOR" CIRCUIT

REF. DWG. 1006013

REF. DWG.
LOGIC FLOW DIAGRAM 1006555

QTY REQD	PART OR IDENTIFYING NO	NOMENCLATURE OR DESCRIPTION	FIND NO
		LIST OF MATERIALS	

		UNLESS OTHERWISE SPECIFIED DIMENSIONS ARE IN INCHES TOLERANCES ON FRACTIONS ± DECIMALS ± ANGLES ±	MIT INSTRUMENTATION LAB CAMBRIDGE MASS.
		DO NOT SCALE THIS DRAWING	DRAWN DATE CHECKED APPROVAL APPROVAL
		MATERIAL SEE NOTE 5	NASA APPROVAL 5-31-67
		HEAT TREATMENT	MIT APPROVAL
NEXT ASSY	USED ON	FINAL FINISH	
APPLICATION			

MANNED SPACECRAFT CENTER
HOUSTON, TEXAS

SIGNAL WIRING DIAGRAM
LOGIC MODULE NO. A24

CODE IDENT NO.	SIZE	NASA DRAWING NO
	E	1006135
SCALE 2/1	WT	SHEET 1 of 1

1006336 A

REVISIONS			
SYM	DESCRIPTION	DATE	APPROVAL
—	INITIAL RELEASE CLASS A PER TDRR 19616	4-27-65	WR
A	REVISED PER TDRR 19925	6/15/65	WR

REQUIREMENTS:

1. GENERAL:
   - A. INTERPRET DRAWING IN ACCORDANCE WITH STANDARDS PRESCRIBED BY MIL-D-70327.
   - B. SUPPLIER SHALL CONFORM TO THE QUALITY ASSURANCE PROVISIONS CONTAINED IN ND 1015404, CLASS 3.
   - C. PART MARKING: PARTS SHALL BE MARKED, IN ACCORDANCE WITH ND 1002019, WITH THE MANUFACTURER'S SYMBOL AND NASA PART NUMBER (DRAWING NUMBER, REVISION LETTER, AND DASH NUMBER).
   - D. PREPARATION FOR DELIVERY SHALL BE IN ACCORDANCE WITH ND 1002215, CLASS I, CODE 7.
     - (1) MARKING OF SHIPPING CONTAINERS SHALL CONFORM TO THE MARKING OF UNIT AND INTERMEDIATE PACKAGES AND THE METHODS OF MARKING AS SPECIFIED IN ND 1002215.

2. ACCEPTANCE AND INSPECTION:
   - A. MECHANICAL REQUIREMENTS:
     - (1) DIMENSIONS: AS DELINEATED HEREIN.
     - (2) MARKING: AS SPECIFIED IN NOTES 1.C AND 1.D.
   - B. VENDOR SUPPLIED DATA: EACH SHIPMENT OF PARTS SHALL BE ACCOMPANIED BY THE FOLLOWING DOCUMENTATION.
     - (1) CERTIFICATE OF COMPLIANCE WITH MATERIAL, HARDNESS, AND FINISH REQUIREMENTS.

3. DESIGN:
   - A. THERMAL RATING: SEE FIGURE 1.
   - B. CONSTRUCTION: TWO-PIECE HOLDER FOR TO-18 TRANSISTORS
     - (1) MATERIAL AND HARDNESS: ALUMINUM ALLOY 2024-T4 PER QQ-A-225.
     - (2) PROTECTIVE FINISH: ANODIZE PER MIL-A-8625, TYPE I, COLOR BLACK.

DASH NO	DESCRIPTION
-001	CAP & TAPPED BASE
-002	CAP & STUD MTG BASE

PROCURE ONLY FROM APPROVED SOURCES LISTED IN ND 1002034 FOR THIS DRAWING.

FIG. 1 - THERMAL CHARACTERISTIC
(TRANSISTOR UNDER TEST 2N735)

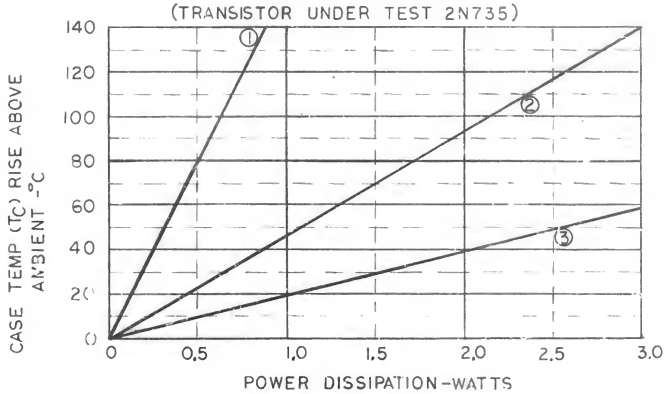

①=TO-18 CASE - NO HEAT SINK
②=TO-18 CASE IN HEAT SINK-NATURAL CONVECTION
③=TO-18 CASE IN HEAT SINK MOUNTED ON 6X6X.06 AL PLATE

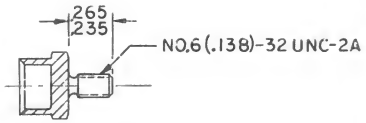

BASE (-002)

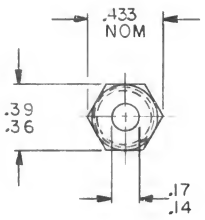

CAP

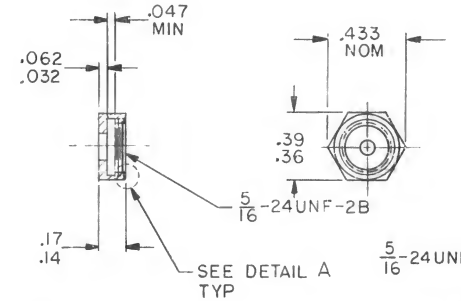

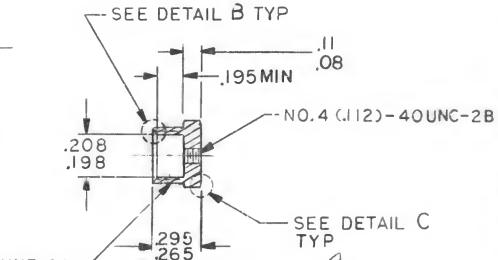

BASE (-001)

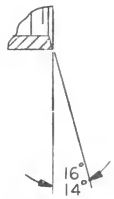

DETAIL A

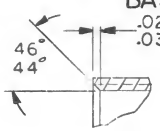

DETAIL B

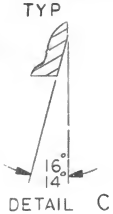

DETAIL C

QTY REQD	PART OR IDENTIFYING NO.	NOMENCLATURE OR DESCRIPTION	FIND NO.

LIST OF MATERIALS

NEXT ASSY	USED ON
APPLICATION	

UNLESS OTHERWISE SPECIFIED
DIMENSIONS ARE IN INCHES
TOLERANCES ON
FRACTIONS ± DECIMALS ± ANGLES ±

DO NOT SCALE THIS DRAWING

MATERIAL: SEE NOTE

HEAT TREATMENT

FINAL FINISH: SEE NOTE

MIT INSTRUMENTATION LAB
CAMBRIDGE, MASS.
DWG. NO. CONTRACT

DRAWN D. Mooney DATE 10 APR 65
CHECKED Tom Edison 13 APR 65
APPROVAL MIT
APPROVAL E. J. Dizzo 4/22/65

NASA APPROVAL W. J. Rhi 4-27-65
MIT APPROVAL
MIT APPROVAL W. Cuffe 27 Apr 65

MANNED SPACECRAFT CENTER
HOUSTON, TEXAS

HEATSINK, ELECTRICAL-ELECTRONIC COMPONENT
SPECIFICATION CONTROL DRAWING

CODE IDENT NO.	SIZE	NASA DRAWING NO.
80230	C	1006336

SCALE NONE | WT | SHEET 1 OF 1

—	1006339

REVISIONS

SYM	ZONE	DESCRIPTION	DR	CHK	DATE	APPROVED
—		INITIAL RELEASE CL. A PER TDRR 19607			5/24/65	WK

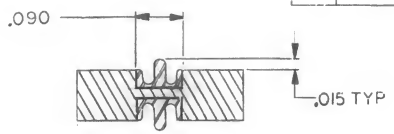

SECTION A-A
ENLARGED

REQUIREMENTS:

1. GENERAL:
   - A. INTERPRET DRAWING IN ACCORDANCE WITH STANDARDS PRESCRIBED BY MIL-D-70327.
   - B. SUPPLIER SHALL CONFORM TO THE QUALITY ASSURANCE PROVISIONS CONTAINED IN ND 1015404, CLASS 2.
   - C. PART MARKING: UNITS SHALL BE MARKED: PER ND 1002019, USING INK PER ND1010920, ON THE SURFACE(S): INDICATED: WITH THE MANUFACTURERS SYMBOL, LOT CODE OR NUMBER, AND NASA PART NUMBER (DRAWING NUMBER AND REVISION LETTER)
   - D. PREPARATION FOR DELIVERY SHALL BE IN ACCORDANCE WITH ND 1002215, CLASS I , CODE I.
     - (1) MARKING OF SHIPPING CONTAINERS SHALL CONFORM TO THE MARKING OF UNIT AND INTERMEDIATE PACKAGES AND THE METHODS OF MARKING PER ND 1002215.

2. ACCEPTANCE & INSPECTION (100%)
   - A. MECHANICAL PROPERTIES:
     - (1) DIMENSIONS: AS DELINEATED HEREIN.
     - (2) MARKING: AS SPECIFIED IN NOTES 1.C AND 1.D.
     - (3) COMPRESSION: PARTS SHALL BE CAPABLE OF COMPLETE COMPRESSION BETWEEN TWO FLAT PLATES WITHOUT DAMAGE TO THE RUBBER GASKET.
     - (4) SURFACE ROUGHNESS 125
   - B. VENDOR SUPPLIED DATA: EACH SHIPMENT OF PARTS SHALL BE ACCOMPANIED BY THE FOLLOWING DOCUMENTATION.
     - (1) CERTIFICATE OF COMPLIANCE WITH MATERIAL, HARDNESS AND FINISH REQUIREMENTS.
     - (2) CERTIFICATE OF COMPLIANCE WITH ND1015404 CLASS 2

3. DESIGN:
   - A. STORAGE LIFE: ONE YEAR MINIMUM (RUBBER GASKET) WHEN STORED AT ORDINARY ROOM CONDITIONS (77 ± 5°F AND 50% RH).
   - B. CONSTRUCTION: MACHINED OR PRECISION CAST ALUMINUM PLATE WITH BUTYL RUBBER GASKETS MOLDED IN PLACE.
     - (1) MATERIAL AND FINISH, PLATE: 6061-T6 ALUMINUM ALLOY PER QQ-A-250/11, CHROMATE PER MIL-C-5541, TYPE II GRADE C, CLASS 3
     - (2) MATERIAL, RUBBER GASKET: BUTYL TYPE RUBBER PER AMS-3238.
     - (3) HARDNESS, RUBBER: 70 ± 5 SHORE A DUROMETER (ASTM D-785).
   - C. SEALING: WHEN COMPRESSED TO THE PLATE LEVEL THE RUBBER SHALL BE CAPABLE OF SEALING AGAINST A LEAKAGE OF 10^{-8} ATM CC/SEC/INCH OF SEAL OF DRY NITROGEN AT A PRESSURE DIFFERENTIAL OF 1 ATMOSPHERES.

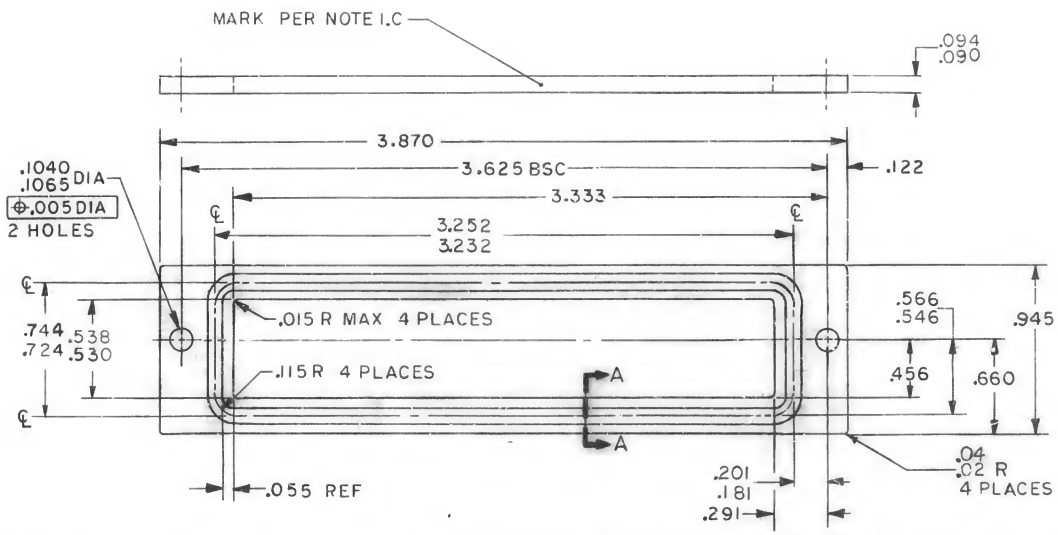

QTY REQD	PART OR IDENTIFYING NO.	MATERIAL OR NOTES	NOMENCLATURE OR DESCRIPTION	FIND NO.

LIST OF MATERIALS

PROCURE ONLY FROM APPROVED SOURCES LISTED IN ND 1002034 FOR THIS DRAWING.

NEXT ASSY	USED ON
APPLICATION	

UNLESS OTHERWISE SPECIFIED DIMENSIONS ARE IN INCHES
CAPACITOR VALUES ARE IN μf
RESISTOR VALUES ARE IN OHMS
TOLERANCES ON
FRACTIONS ± DECIMALS ±.005 ANGLES ±
DO NOT SCALE THIS DRAWING

MATERIAL
SEE NOTE

MIT INSTRUMENTATION LAB
CAMBRIDGE, MASS.

DRAWN D. Mooney 9 APR 65
CHECKED A. Marks 5-21-65
APPROVED
APPROVED Eldon C. Hall 26 May 65
APPROVED MIT W. Kupfer 26 May 65
APPROVED MSC R. Michael 5/24/65
DATE

MANNED SPACECRAFT CENTER
HOUSTON, TEXAS

GASKET, PLATE
BONDED RUBBER, RETAINED
SPECIFICATION CONTROL DRAWING

CODE IDENT NO.	SIZE	DRAWING NO.
80230	C	1006339

SCALE NONE
SHEET 1 OF 1

1006340 C

REVISIONS

SYM	ZONE	DESCRIPTION	DR	CHK	DATE	APPROVED
		INITIAL RELEASE CLASS A PER TDRR 19722			6-2-65	WLR
A		REVISED PER TDRR 20100	EJ		6/28/65	WLR
B		REVISED PER TDRR 2141			8/27/65	WLR
C		REVISED PER TDRR 22141			5-14	

REQUIREMENTS:

1. GENERAL:

   A. INTERPRET DRAWING IN ACCORDANCE WITH STANDARDS PRESCRIBED BY MIL-D-70327.

   B. SUPPLIER SHALL CONFORM TO THE QUALITY ASSURANCE PROVISIONS CONTAINED IN ND 1015404, CLASS 2.

   C. PREPARATION FOR DELIVERY SHALL BE IN ACCORDANCE WITH ND 1002215, CLASS I, CODE 2.

      (1) MARKING OF SHIPPING CONTAINERS SHALL CONFORM TO THE MARKING OF UNIT AND INTERMEDIATE PACKAGES AND THE METHODS OF MARKING SPECIFIED IN ND 1002215.

      (2) UNIT MARKING SHALL CONSIST OF MANUFACTURER'S IDENTIFICATION AND DATE CODE.

2. ACCEPTANCE AND INSPECTION:

   A. MECHANICAL REQUIREMENTS:

      (1) DIMENSIONS: AS DELINEATED HEREIN.

      (2) TERMINALS: SHALL BE FREE OF PLASTIC OR ANY OTHER CONTAMINANTS WHICH WOULD ADVERSELY AFFECT SOLDERED CONNECTIONS.

   B. ELECTRICAL CHARACTERISTICS:

      (1) LIGHT OUTPUT: 2.0 FOOT-LAMBERTS MINIMUM, 3.0 FOOT-LAMBERTS MAXIMUM, WHEN EXCITED BY 75 V ± 1 AT 400 CPS.

      (2) POWER CONSUMPTION: NOT MORE THAN 5.5 MILLIWATTS WHEN EXCITED BY 75 V ± 1 AT 400 CPS. ± 10

   C. VENDOR SUPPLIED DATA: EACH SHIPMENT OF PARTS SHALL BE ACCOMPANIED BY THE FOLLOWING DOCUMENTATION.

      (1) CERTIFICATE OF COMPLIANCE WITH LEAD MATERIAL.

      (2) CERTIFICATE OF COMPLIANCE WITH COLOR REQUIREMENTS.

3. DESIGN:

   A. CONSTRUCTION: ELECTROLUMINESCENT CELL SANDWICHED AND SEALED BETWEEN TWO SHEETS OF PLASTIC INSULATION.

      (1) ELECTRICAL LEADS SHALL BE COPPER MESH OR RIBBON, SILVER PLATED PER QQ-S-365, TYPE 1 GRADE B, OR PHOSPHOR-BRONZE MESH.

   B. COLOR: WHITE, WITH COLOR COORDINATES: X = 0.300 ± 0.020; Y = 0.300 ± 0.020 WHEN MEASURED IN ACCORDANCE WITH PROCEDURES OF MIL-L-27160, OR A SATISFACTORY ALTERNATE METHOD.

   C. LIFE (DESIGN OBJECTIVE): AFTER 2000 HOURS AT 74°F, 75 V ± 1, 400 CPS ± 10, UNITS SHALL LOSE NOT MORE THAN 75% OF INITIAL INTENSITY: LIGHT OUTPUT SHALL BE NOT LESS THAN 1.5 FOOT-LAMBERTS AFTER LIFE WHEN ENERGIZED BY 115 V ± 1, 400 CPS ± 10.

   D. MAXIMUM TEMPERATURE LIMIT: 160°F, OPERATING OR NON-OPERATING. ACCELERATED LIFE DEGRADATION IS EXPERIENCED WITH OPERATION ABOVE 80°F.

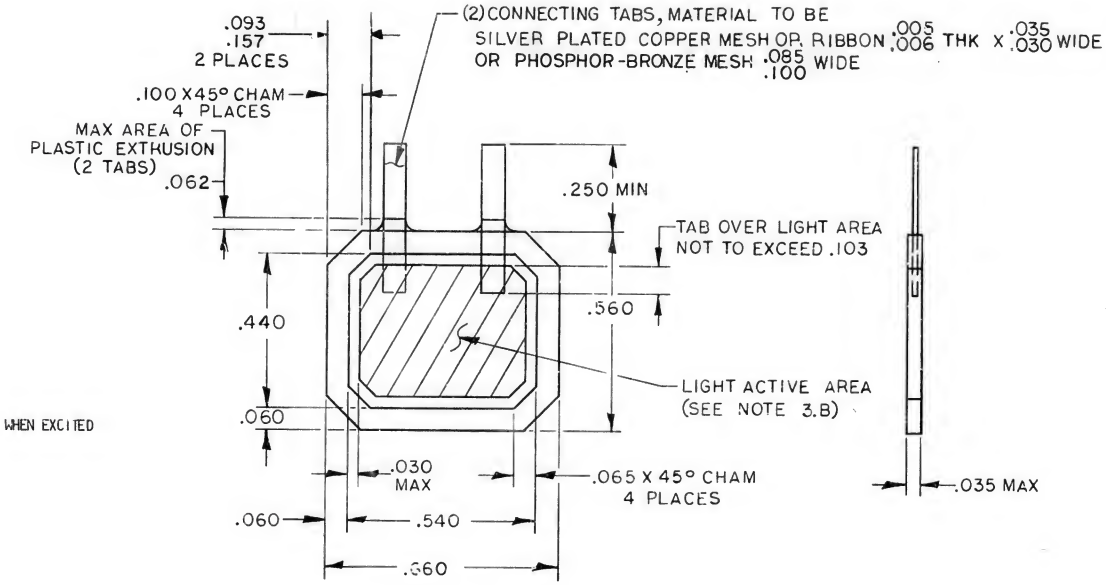

PROCURE ONLY FROM APPROVED SOURCES LISTED IN ND 1002034 FOR THIS DRAWING.

NEXT ASSY	USED ON
APPLICATION	

UNLESS OTHERWISE SPECIFIED DIMENSIONS ARE IN INCHES
CAPACITOR VALUES ARE IN μf
RESISTOR VALUES ARE IN OHMS
TOLERANCES ON
FRACTIONS ± DECIMALS ±.010 ANGLES ± 5°
DO NOT SCALE THIS DRAWING

MATERIAL: SEE NOTE

QTY REQD	PART OR IDENTIFYING NO.	MATERIAL OR NOTES	NOMENCLATURE OR DESCRIPTION	FIND NO.

LIST OF MATERIALS

MIT INSTRUMENTATION LAB, CAMBRIDGE, MASS.

DRAWN 30MAR65
CHECKED 30MAR65
APPROVED
APPROVED 1 June 65
APPROVED MIT 2 June 65
APPROVED MSC 6/2/65 DATE

MANNED SPACECRAFT CENTER, HOUSTON, TEXAS

PANEL, ELECTROLUMINESCENT, PLASTIC

SPECIFICATION CONTROL DRAWING

CODE IDENT NO.	SIZE	DRAWING NO.
80230	C	1006340

SCALE NONE — SHEET 1 OF 1

1006345 —

REVISIONS

SYM	ZONE	DESCRIPTION	DR	CHK	DATE	APPROVED
—		INITIAL RELEASE CLASS A PER TDRR 20103			6-10-65	

REQUIREMENTS:

1. GENERAL:

   A. INTERPRET DRAWING IN ACCORDANCE WITH THE STANDARDS PRESCRIBED BY MIL-D-70327.

   B. UNITS SHALL MEET THE GENERAL REQUIREMENTS OF MIL-V-45363 EXCEPT AS, AND IN ADDITION TO THE REQUIREMENTS, SPECIFIED HEREIN.

   C. SUPPLIER SHALL CONFORM TO THE QUALITY ASSURANCE PROVISIONS CONTAINED IN ND 1015404, CLASS 3.

   D. PART MARKING: PARTS SHALL BE MARKED, IN ACCORDANCE WITH ND 1002019, WITH THE MANUFACTURER'S SYMBOL, PART NUMBER, AND NASA PART NUMBER (DRAWING NUMBER, REVISION LETTER, AND DASH NUMBER).

   E. PREPARATION FOR DELIVERY SHALL BE IN ACCORDANCE WITH ND 1002215, CLASS I, CODE 3, 4, & 7.

      (1) MARKING OF SHIPPING CONTAINERS SHALL CONFORM TO THE MARKING OF UNIT AND INTERMEDIATE PACKAGES AND THE METHODS OF MARKING SPECIFIED IN ND 1002215.

2. ACCEPTANCE AND INSPECTION:

   A. MECHANICAL REQUIREMENTS:

      (1) DIMENSIONS: AS SPECIFIED HEREIN.

      (2) MARKING: AS SPECIFIED IN NOTES 1.D & 1.E

      (3) SEAL: WHEN PROPERLY INSTALLED IN A MOUNTING HOLE .375-.380 DIAMETER IN A PANEL HAVING A SURFACE ROUGHNESS OF 63√, THE VALVE WITH CORE, CAP, AND "O" RING ASSEMBLED SHALL EXHIBIT A LEAK RATE OF LESS THAN 10^{-8} CC/SEC OF DRY NITROGEN UNDER AN INTERNAL PRESSURE DIFFERENTIAL OF +20 PSI.

   B. VENDOR SUPPLIED DATA: EACH SHIPMENT OF PARTS SHALL BE ACCOMPANIED BY THE FOLLOWING DOCUMENTATION:

      (1) CERTIFICATE OF COMPLIANCE WITH MATERIAL REQUIREMENTS.

      (2) CERTIFICATE OF COMPLIANCE WITH SEALING CAPABILITY REQUIREMENTS.

3. DESIGN:

   A. OPERATING LIFE: 1 YEAR MINIMUM WHEN PROPERLY INSTALLED [NOTE 2.A.(3)]

   B. STORAGE LIFE: 6 MONTHS MINIMUM FROM DATE OF SHIPMENT WHEN STORED AT 77° ± 10°F AND 50 ± 10% RH. SEALING ABILITY SHALL NOT BE IMPAIRED.

   C. CONSTRUCTION: STANDARD AUTOMOBILE-TYPE VALVE PER MIL-V-45363 EXCEPT FOR THE FOLLOWING:

      (1) BASE DESIGN: AS DELINEATED.

      (2) CAP AND CORE RUBBER MATERIAL: BUTYL RUBBER PER AMS 3238B.

      (3) O-RING SEAL: SILICONE OR BUTYL RUBBER (NASA PART 1000159-14 REFERENCE).

      (4) VALVE CAP: NICKEL PLATE PER QQ-N-290, TYPE V.

PROCURE ONLY FROM APPROVED SOURCES LISTED IN ND 1002034 FOR THIS DRAWING.

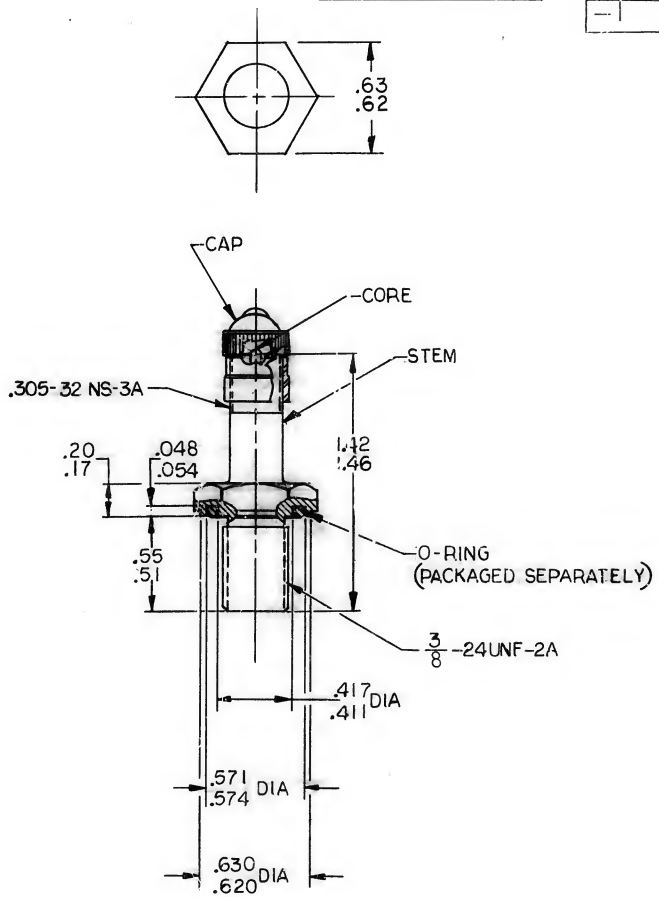

QTY REQD	PART OR IDENTIFYING NO.	MATERIAL OR NOTES	NOMENCLATURE OR DESCRIPTION	FIND NO.

LIST OF MATERIALS

NEXT ASSY	USED ON
APPLICATION	

UNLESS OTHERWISE SPECIFIED DIMENSIONS ARE IN INCHES
CAPACITOR VALUES ARE IN μf
RESISTOR VALUES ARE IN OHMS
TOLERANCES ON
FRACTIONS ± DECIMALS ± ANGLES ±
DO NOT SCALE THIS DRAWING

MATERIAL
SEE NOTE

MIT INSTRUMENTATION LAB
CAMBRIDGE, MASS.

MANNED SPACECRAFT CENTER
HOUSTON, TEXAS

DRAWN W. Gellenberg 5-7-65 / 28 APR 65
CHECKED A. Caggiano 7 May 65
APPROVED
APPROVED Edwin C. Hall 14 June 65
APPROVED MIT M. G. Morley 6-15-65
APPROVED MSC K. Mulbach 6/15/65
DATE

VALVE, PNEUMATIC TANK

SPECIFICATION CONTROL DRAWING

CODE IDENT NO. 80230 | SIZE C | DRAWING NO. 1006345

SCALE NONE | SHEET 1 OF 1

1006349

REVISIONS			
SYM	DESCRIPTION	DATE	APPROVED
–	INITIAL RELEASE CLASS A PER TOOR 14682	5 MAY 65	WK

REQUIREMENTS:

1. GENERAL:
   - A. INTERPRET DRAWING IN ACCORDANCE WITH STANDARDS PRESCRIBED BY MIL-D-70327.
   - B. SUPPLIER SHALL CONFORM TO THE QUALITY ASSURANCE PROVISIONS CONTAINED IN ND 1015404, CLASS 2.
   - C. PART MARKING: UNITS SHALL BE MARKED: PER NO 1002019, ON THE SURFACE(S) INDICATED: WITH THE MANUFACTURER'S SYMBOL, LOT CODE OR NUMBER, AND NASA PART NUMBER (DRAWING NUMBER AND REVISION LETTER).
   - D. PREPARATION FOR DELIVERY SHALL BE IN ACCORDANCE WITH ND 1002215, CLASS I , CODE 3.
     - (1) MARKING OF SHIPPING CONTAINERS SHALL CONFORM TO THE MARKING OF UNIT AND INTERMEDIATE PACKAGES AND THE METHODS OF MARKING PER ND 1002215.
2. ACCEPTANCE & INSPECTION (100%)
   - A. MECHANICAL PROPERTIES:
     - (1) DIMENSIONS: AS DELINEATED HEREIN.
     - (2) MARKING: AS SPECIFIED IN NOTES 1.C AND 1.D.
     - (3) COMPRESSION: RUBBER SEAL PORTION SHALL BE CAPABLE OF BEING COMPRESSED TO THE LEVEL OF THE PLATE WITHOUT DAMAGE.
     - (4) SURFACE ROUGHNESS 125 ✓
   - B. VENDOR SUPPLIED DATA: EACH SHIPMENT OF PARTS SHALL BE ACCOMPANIED BY THE FOLLOWING DOCUMENTATION
     - (1) CERTIFICATE OF COMPLIANCE WITH MATERIAL, HARDNESS AND FINISH REQUIREMENTS.
     - (2) CERTIFICATE OF COMPLIANCE TO 1015404 CLASS 2
3. DESIGN:
   - A. STORAGE LIFE: ONE YEAR MINIMUM (RUBBER GASKET) WHEN STORED AT ORDINARY ROOM CONDITIONS (77 ± 5°F AND 50% RH).
   - B. CONSTRUCTION: MACHINED OR PRECISION CAST ALUMINUM PLATE WITH BUTYL RUBBER GASKETS MOLDED IN PLACE.
     - (1) MATERIAL AND FINISH, PLATE: 6061-T6 ALUMINUM ALLOY PER QQ-A-250/11, BLACK ANODIZED PER MIL-A-8625 , TYPE II, COLOR BLACK.
     - (2) MATERIAL, RUBBER GASKET: BUTYL TYPE RUBBER PER AMS-3238 .
     - (3) HARDNESS RUBBER: 70 ± 5 SHORE A DUROMETER (ASTM D-785).
   - C. SEALING: WHEN COMPRESSED TO THE PLATE LEVEL, THE RUBBER SHALL BE CAPABLE OF SEALING AGAINST A LEAKAGE OF 10^{-8} ATM CC/SEC/INCH OF SEAL OF DRY NITROGEN AT A PRESSURE DIFFERENTIAL OF 2 ATMOSPHERES.

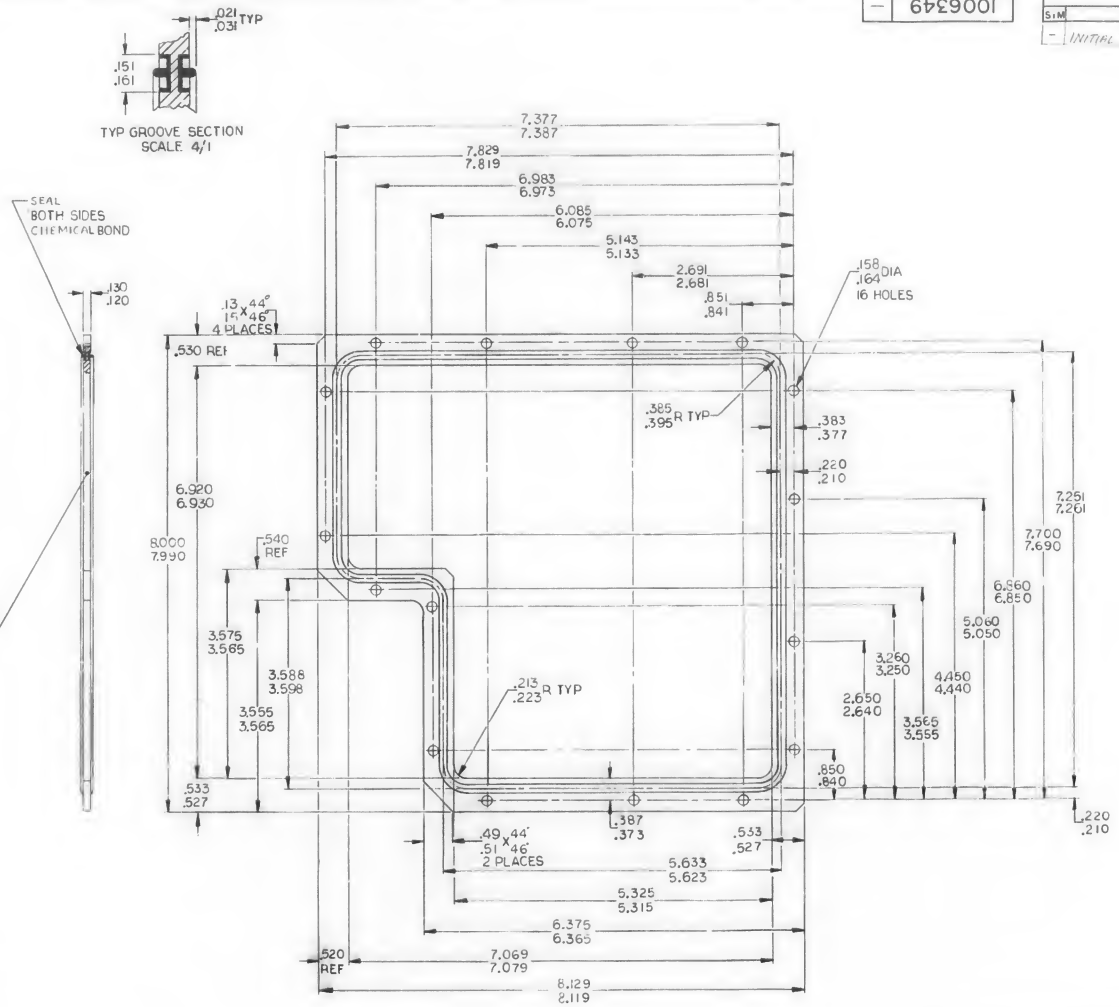

PROCURE ONLY FROM APPROVED SOURCES LISTED IN ND 1002034 FOR THIS DRAWING.

QTY REQD	PART OR IDENTIFYING NO.	NOMENCLATURE OR DESCRIPTION	FIND NO.
LIST OF MATERIALS			

NEXT ASSY	USED ON
APPLICATION	

UNLESS OTHERWISE SPECIFIED DIMENSIONS ARE IN INCHES
TOLERANCES ON
DECIMALS .XX ± DECIMALS .XXX ± ANGLES ±
DO NOT SCALE DRAWING
MATERIAL

MIT INSTRUMENTATION LAB Cambridge Mass
DRAWN DATE 5 MAY 65
CHECKED
APPROVAL
APPROVAL
APPROVAL
NASA APPROVAL
MIT APPROVAL

MANNED SPACECRAFT CENTER HOUSTON, TEXAS

GASKET, BONDED, RUBBER, RETAINED

SPECIFICATION CONTROL DRAWING

CODE IDENT NO.	SIZE	NASA DRAWING NO
—	D	1006349
SCALE 1/1	WT	SHEET 1 OF 1

REQUIREMENTS:

1. GENERAL:
   - A. INTERPRET DRAWING IN ACCORDANCE WITH STANDARDS PRESCRIBED BY MIL-D-70327.
   - B. SUPPLIER SHALL CONFORM TO THE QUALITY ASSURANCE PROVISIONS CONTAINED IN ND 1015404, CLASS 3
   - C. PART MARKING: IDENTIFY PER ND 1002019. THE SURFACE(S) INDICATED: WITH THE MANUFACTURER'S SYMBOL, LOT CODE OR NUMBER, AND NASA PART NUMBER (DRAWING NUMBER AND REVISION LETTER).
   - D. PREPARATION FOR DELIVERY SHALL BE IN ACCORDANCE WITH ND 1002215, CLASS I . CODE 3.
     - (1) MARKING OF SHIPPING CONTAINERS SHALL CONFORM TO THE MARKING OF UNIT AND INTERMEDIATE PACKAGES AND THE METHODS OF MARKING PER ND 1002215.

2. ACCEPTANCE & INSPECTION (100%)
   - A. MECHANICAL PROPERTIES:
     - (1) DIMENSIONS: AS DELINEATED HEREIN.
     - (2) MARKING: AS SPECIFIED IN NOTES 1.C AND 1.D.
     - (3) COMPRESSION: RUBBER SEAL PORTION SHALL BE CAPABLE OF BEING COMPRESSED TO THE LEVEL OF THE PLATE WITHOUT DAMAGE.
     - (4) SURFACE ROUGHNESS 125 PER MIL-STD-10
   - B. VENDOR SUPPLIED DATA: EACH SHIPMENT OF PARTS SHALL BE ACCOMPANIED BY THE FOLLOWING DOCUMENTATION.
     - (1) CERTIFICATE OF COMPLIANCE WITH MATERIAL, HARDNESS AND FINISH REQUIREMENTS.
     - (2) CERTIFICATE OF COMPLIANCE WITH ND 1015404, CLASS 3

3. DESIGN:
   - A. STORAGE LIFE: ONE YEAR MINIMUM (RUBBER GASKET) WHEN STORED AT ORDINARY ROOM CONDITIONS (77° ± 5°F AND 50% RH).
   - B. CONSTRUCTION: MACHINED OR PRECISION CAST ALUMINUM PLATE WITH BUTYL RUBBER GASKETS MOLDED IN PLACE.
     - (1) MATERIAL AND FINISH, PLATE: 6061-T6 ALUMINUM ALLOY PER QQ-A-250/11. CHROMATE FILM PER MIL-C-5541, TYPE II, CLASS 3.
     - (2) MATERIAL, RUBBER GASKET: BUTYL TYPE RUBBER PER AMS-3238A.
     - (3) HARDNESS, RUBBER: 70 ± 5 SHORE A DUROMETER (ASTM D-785).
   - C. SEALING: WHEN COMPRESSED TO THE PLATE LEVEL, THE RUBBER SHALL BE CAPABLE OF SEALING AGAINST A LEAKAGE OF 2×10^{-8} ATM CC/SEC/INCH OF SEAL OF DRY NITROGEN AT A PRESSURE DIFFERENTIAL OF 2 ATMOSPHERES AND A TEMPERATURE OF -10° TO 82°C.

PROCURE ONLY FROM APPROVED SOURCES LISTED IN ND 1002034 FOR THIS DRAWING.

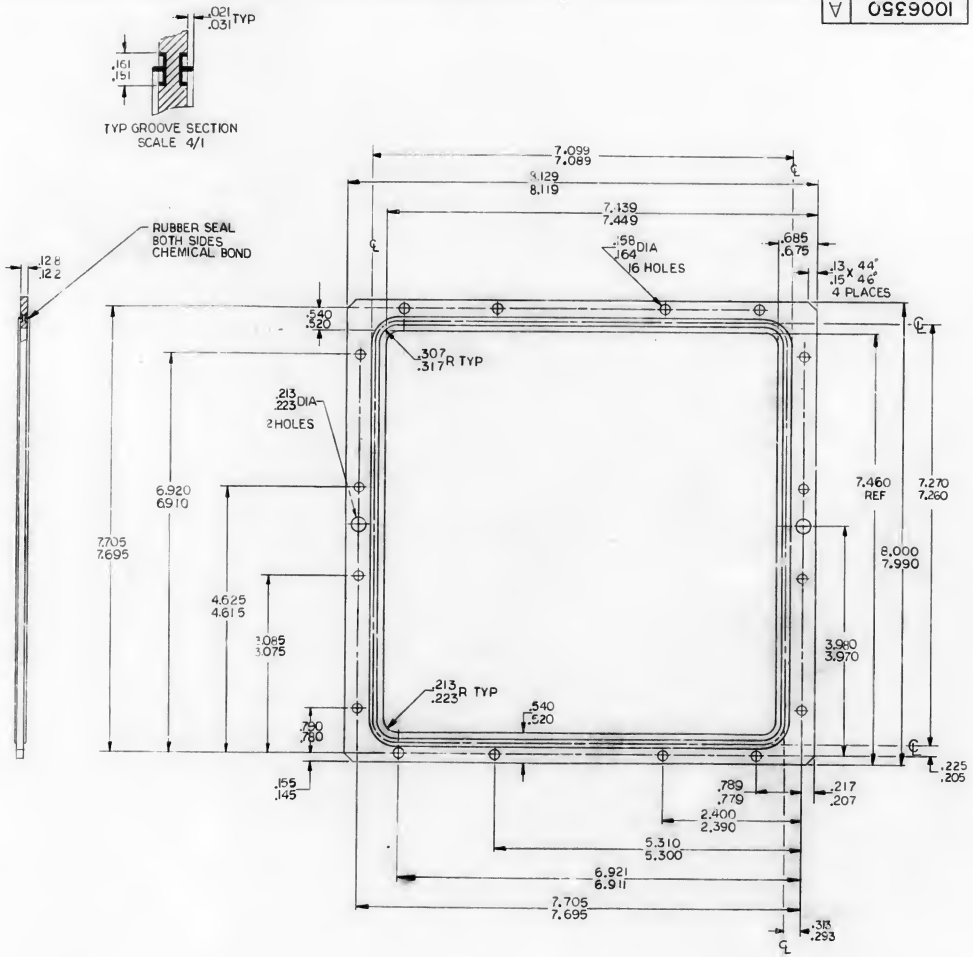

SYM	DESCRIPTION	DATE	APPROVED
—	INITIAL RELEASE CLASS A PER TDRR 20100	6-15-66	
A	REVISED PER TDRR 22129	9/14	

REVISIONS

QTY REQD	PART OR IDENTIFYING NO.	NOMENCLATURE OR DESCRIPTION	FIND NO.

LIST OF MATERIALS

NEXT ASSY	USED ON
APPLICATION	

UNLESS OTHERWISE SPECIFIED DIMENSIONS ARE IN INCHES
TOLERANCES ON
DECIMALS .XX ± DECIMALS .XXX ± ANGLES ±

DO NOT SCALE DRAWING

MATERIAL

MIT INSTRUMENTATION LAB CAMBRIDGE MASS

DRAWN DATE
CHECKED
APPROVAL
APPROVAL
APPROVAL
NASA APPROVAL
MIT APPROVAL
MIT APPROVAL

MANNED SPACECRAFT CENTER HOUSTON, TEXAS

GASKET, BONDED, RUBBER, RETAINED

SPECIFICATION CONTROL DRAWING

CODE IDENT NO. 80030 | SIZE D | NASA DRAWING NO. 1006350

SCALE 1/1 | WT | SHEET 1 OF 1

1006350 A

REVISIONS			
SYM	DESCRIPTION	DATE	APPROVED
—	INITIAL RELEASE CLASS A PER TDRR 11698	2-14-67	Will
A	REVISED PER TDRR 22131	4/14	1/16/71

A 1006351

REQUIREMENTS:

1. GENERAL:
   - A. INTERPRET DRAWING IN ACCORDANCE WITH STANDARDS PRESCRIBED BY MIL-D-70327.
   - B. SUPPLIER SHALL CONFORM TO THE QUALITY ASSURANCE PROVISIONS CONTAINED IN ND 1015404, CLASS 3
   - C. PART MARKING: IDENTIFY PER ND1002019 WITH THE MANUFACTURER'S SYMBOL, LOT CODE OR NUMBER, AND NASA PART NUMBER (DRAWING NUMBER AND REVISION LETTER).
   - D. PREPARATION FOR DELIVERY SHALL BE IN ACCORDANCE WITH ND 1002215, CLASS I , CODE 3.
     - (1) MARKING OF SHIPPING CONTAINERS SHALL CONFORM TO THE MARKING OF UNIT AND INTERMEDIATE PACKAGES AND THE METHODS OF MARKING PER ND 1002215.

2. ACCEPTANCE & INSPECTION (100%)
   - A. MECHANICAL PROPERTIES:
     - (1) DIMENSIONS: AS DELINEATED HEREIN.
     - (2) MARKING: AS SPECIFIED IN NOTES 1.C AND 1.D.
     - (3) COMPRESSION: RUBBER SEAL PORTION SHALL BE CAPABLE OF BEING COMPRESSED TO THE LEVEL OF THE PLATE WITHOUT DAMAGE.
     - (4) SURFACE ROUGHNESS 125 PER MIL-STD-10
   - B. VENDOR SUPPLIED DATA: EACH SHIPMENT OF PARTS SHALL BE ACCOMPANIED BY THE FOLLOWING DOCUMENTATION.
     - (1) CERTIFICATE OF COMPLIANCE WITH MATERIAL, HARDNESS AND FINISH REQUIREMENTS.
     - (2) CERTIFICATE OF COMPLIANCE WITH 1015404 CLASS 3

3. DESIGN:
   - A. STORAGE LIFE: ONE YEAR MINIMUM (RUBBER GASKET) WHEN STORED AT ORDINARY ROOM CONDITIONS (77 ± 5°F AND 50% RH).
   - B. CONSTRUCTION: MACHINED OR PRECISION CAST ALUMINUM PLATE WITH BUTYL RUBBER GASKETS MOLDED IN PLACE.
     - (1) MATERIAL AND FINISH, PLATE: 6061-T6 ALUMINUM ALLOY PER QQ-A-250/11, CHROMATE FILM PER MIL-C-5541 TYPE II, CLASS 3
     - (2) MATERIAL, RUBBER GASKET: BUTYL TYPE RUBBER PER AMS-3238 .
     - (3) HARDNESS, RUBBER: 70 ± 5 SHORE A DUROMETER (ASTM D-785).
   - C. SEALING: WHEN COMPRESSED TO THE PLATE LEVEL, THE RUBBER SHALL BE CAPABLE OF SEALING AGAINST A LEAKAGE OF 2 X 10^{-8} ATM CC/SEC/INCH OF SEAL OF DRY NITROGEN AT A PRESSURE DIFFERENTIAL OF 2 ATMOSPHERES AND A TEMPERATURE OF −10° TO 82°C

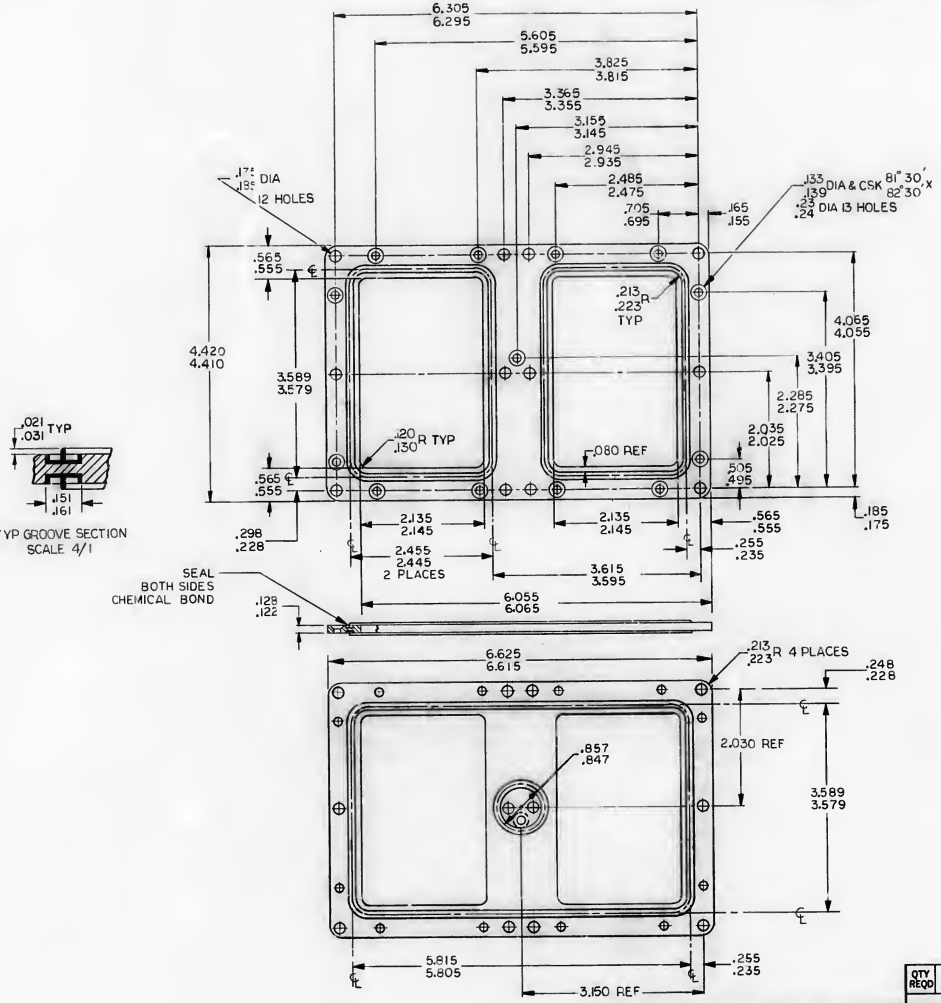

PROCURE ONLY FROM APPROVED SOURCES LISTED IN ND 1002034 FOR THIS DRAWING.

QTY REQD	PART OR IDENTIFYING NO.	NOMENCLATURE OR DESCRIPTION	FIND NO.

LIST OF MATERIALS

NEXT ASSY	USED ON
APPLICATION	

UNLESS OTHERWISE SPECIFIED DIMENSIONS ARE IN INCHES
TOLERANCES ON
DECIMALS .xx ± DECIMALS .xxx ± ANGLES ±

DO NOT SCALE DRAWING

MATERIAL

MIT INSTRUMENTATION LAB CAMBRIDGE, MASS

DRAWN DATE 6 MAY 65
CHECKED
APPROVAL
APPROVAL
APPROVAL
NASA APPROVAL 7/14/71
MIT APPROVAL
MIT APPROVAL 26 Feb 67

MANNED SPACECRAFT CENTER
HOUSTON, TEXAS

GASKET, BONDED, RUBBER, RETAINED
SPECIFICATION CONTROL DRAWING

CODE IDENT NO.	SIZE	NASA DRAWING NO.
80230	D	1006351

SCALE 1/1 WT SHEET 1 OF 1

1006351 A

REVISIONS

SYM	ZONE	DESCRIPTION	DR	CHK	DATE	APPROVED
–		INITIAL RELEASE CLASS A PER TDRR 22757			9-28-65	WR
A		REVISED PER TDRR 25528			3/19/66	WR
B		REVISED PER TDRR 26880	LJB		3/19/66	WR

REQUIREMENTS:

1. GENERAL:

   A. INTERPRET DRAWING IN ACCORDANCE WITH STANDARDS PRESCRIBED BY MIL-D-70327.

   B. SUPPLIER SHALL CONFORM TO THE QUALITY ASSURANCE PROVISIONS SPECIFIED IN ND 1015404, CLASS 3.

   C. UNIT PACKAGES AND SHIPPING CONTAINERS SHALL BE MARKED INTERNALLY AND EXTERNALLY, IN ACCORDANCE WITH MIL-STD-129, WITH THE MANUFACTURER'S NAME, PRODUCT IDENTIFICATION, QUANTITY, LOT CODE OR NUMBER, DATE OF MANUFACTURE OR CODE, AND NASA PART NUMBER (DRAWING NUMBER AND REVISION LETTER).

2. ACCEPTANCE AND INSPECTION:

   A. MECHANICAL REQUIREMENTS:

      (1) DIMENSIONS: AS SHOWN.

   B. ELECTRICAL REQUIREMENTS:

      (1) CONTINUITY: EACH CONDUCTOR SHALL BE ELECTRICALLY CONTINUOUS BETWEEN ITS TERMINATIONS.

      (2) DIELECTRIC WITHSTANDING VOLTAGE: 500 VDC (TEST PER MIL-STD-202, METHOD 301), AT 500 VDC.

      (3) INSULATION RESISTANCE: 100 MEGOHMS MINIMUM (TEST PER MIL-STD-202, METHOD 302)

   C. EACH SHIPMENT OF UNITS SHALL BE ACCOMPANIED BY THE FOLLOWING DATA:

      (1) CERTIFICATE OF COMPLIANCE WITH ND 1015404.

      (2) CERTIFICATE OF COMPLIANCE WITH THE DESIGN REQUIREMENTS OF THIS DRAWING.

3. DESIGN:

   A. CONSTRUCTION: THE UNIT SHALL CONSIST OF COPPER FOIL CONDUCTORS, LAMINATED BETWEEN SHEETS OF PLASTIC INSULATING MATERIAL, BACKED BY A SHEET OF GLASS CLOTH, AND HAVING SOLDERABLE CONDUCTOR TERMINATIONS.

   B. MATERIALS:

      (1) CONDUCTOR: TWO OUNCE (0.0027 THK) COPPER FOIL.

      (2) INSULATION: PLASTIC FILM, 0.005 THICK, (TRIFLUOROCHLOROETHYLENE (KEL-F) OR FLUOROHALOCARBON (ACLAR)

      (3) BACKUP SHEET: .001 THICK GLASS CLOTH. AND .002 ACLAR OR KEL-F TO LAMINATE

   C. VOLTAGE RATING: 300 VRMS.

PROCURE ONLY FROM APPROVED SOURCES LISTED IN ND 1002034 FOR THIS DRAWING.

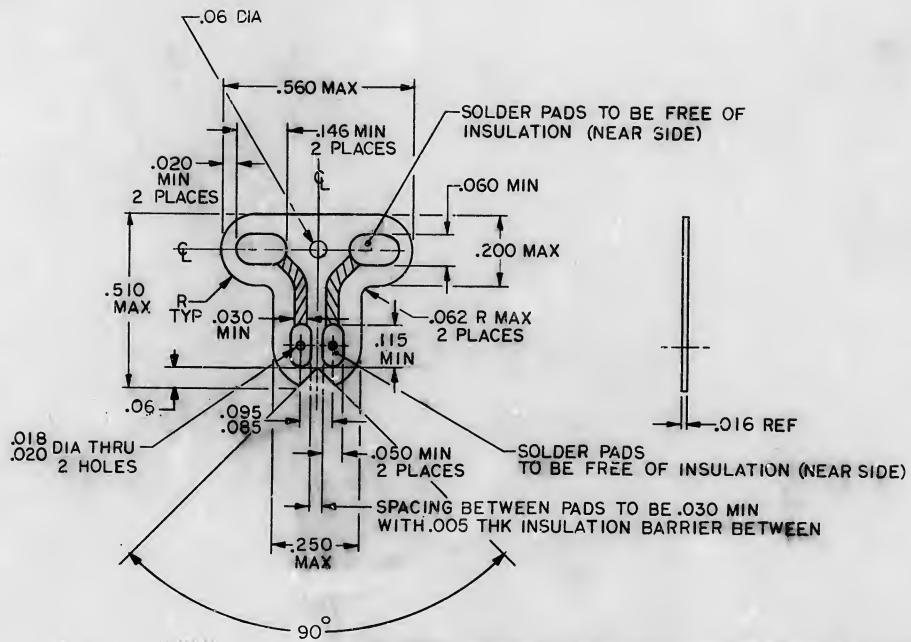

QTY REQD	PART OR IDENTIFYING NO.	MATERIAL OR NOTES	NOMENCLATURE OR DESCRIPTION	FIND NO.

LIST OF MATERIALS

NEXT ASSY	USED ON
APPLICATION	

UNLESS OTHERWISE SPECIFIED DIMENSIONS ARE IN INCHES
CAPACITOR VALUES ARE IN μf
RESISTOR VALUES ARE IN OHMS
TOLERANCES ON
FRACTIONS ± DECIMALS ±.01 ANGLES ±2°
DO NOT SCALE THIS DRAWING

MATERIAL: SEE NOTE

MIT INSTRUMENTATION LAB, CAMBRIDGE, MASS.

MANNED SPACECRAFT CENTER, HOUSTON, TEXAS

DRAWN H. Wong GB 7SEP65
CHECKED J.P. Teagan JPT 14SEP65
APPROVED
APPROVED Ellen C Hull 28Sep65
APPROVED MAINT NOT REQUIRED PER LETTER
APPROVED MSC PP7-65-612 DATE

CABLE ASSEMBLY, SPECIAL PURPOSE, ELECTRICAL

SPECIFICATION CONTROL DRAWING

CODE IDENT NO.	SIZE	DRAWING NO.
80230	C	1006371

SCALE NONE SHEET 1 OF 1

MODERN BLUE PRINT CO. D-19550

REVISIONS						
SYM	ZONE	DESCRIPTION	BY	CHK	DATE	APPROVED
A		REPLACES REV - WITH CHANGE PER TDRR 24277	[illegible]		11-15-67	[illegible]
B		REVISED PER TDRR 25936	[illegible]		2-12-68	[illegible]
C		REVISED PER TDRR 26207			8/1/68	[illegible]

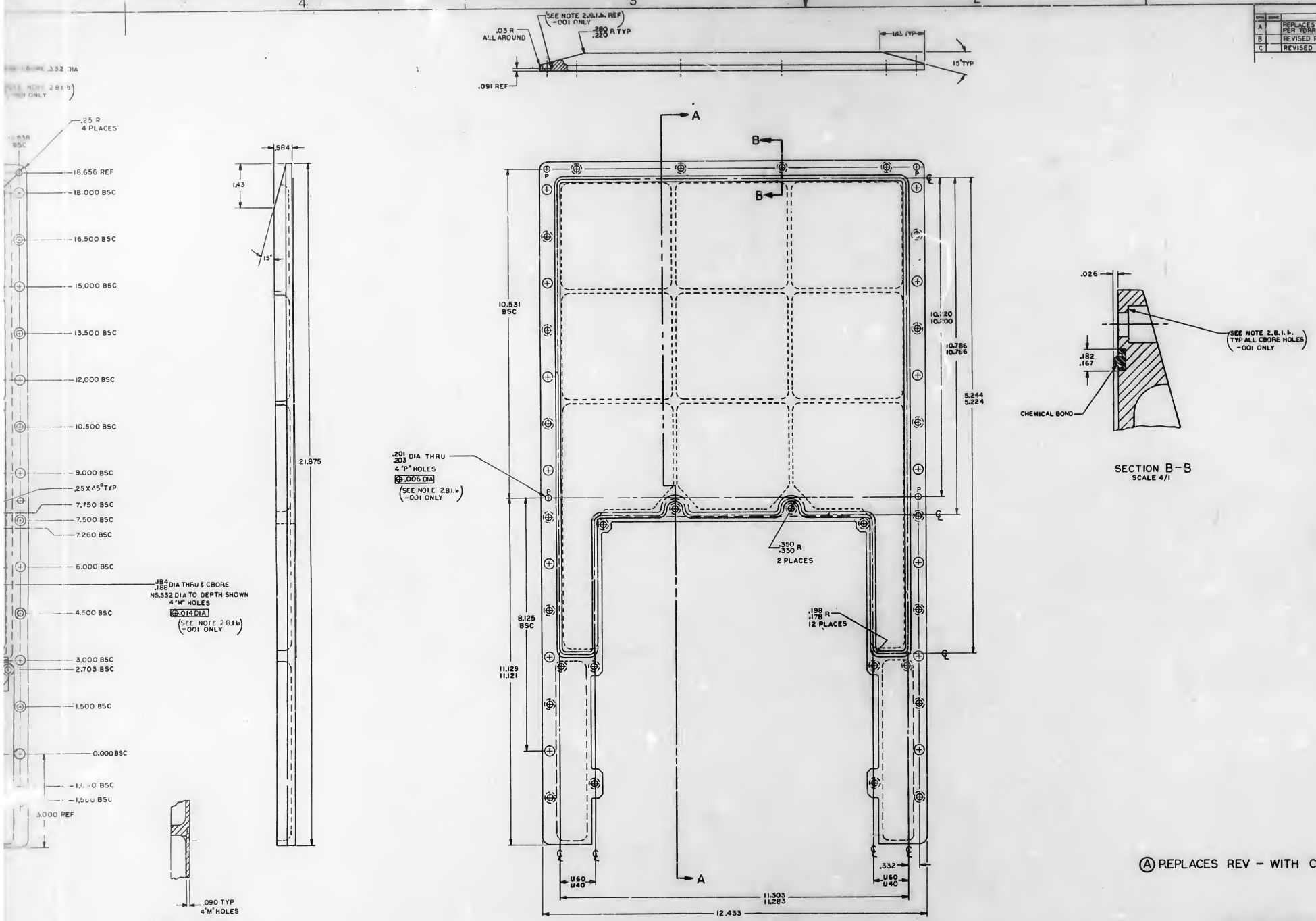

Ⓐ REPLACES REV - WITH CHANGE

QTY REQ'D	PART OR IDENTIFYING NO	NOMENCLATURE OR DESCRIPTION	FIND NO.
		LIST OF MATERIALS	

UNLESS OTHERWISE SPECIFIED DIMENSIONS ARE IN INCHES
CAPACITOR VALUES ARE IN μf
RESISTOR VALUES ARE IN OHMS
TOLERANCES ON
FRACTIONS ± — DECIMALS .XX ±.03 .XXX ±.01 ANGLES ± 1°
DO NOT SCALE THIS DRAWING

MATERIAL: SEE REQUIREMENTS

NEXT ASSY | USED ON | APPLICATION

MIT INSTRUMENTATION LAB
CAMBRIDGE, MASS

MANNED SPACECRAFT CENTER
HOUSTON, TEXAS

DRAWN [illegible] | CHECKED [illegible] | APPROVED [illegible] | APPROVED [illegible] | APPROVED MIT [illegible] | APPROVED NASA [illegible]

GASKET, RETAINED

SPECIFICATION CONTROL DRAWING

CODE IDENT NO 80230 | SIZE J | DRAWING NO. 1006378

DATE | SCALE 1/1 | SHEET 1 OF 1

1006378 C

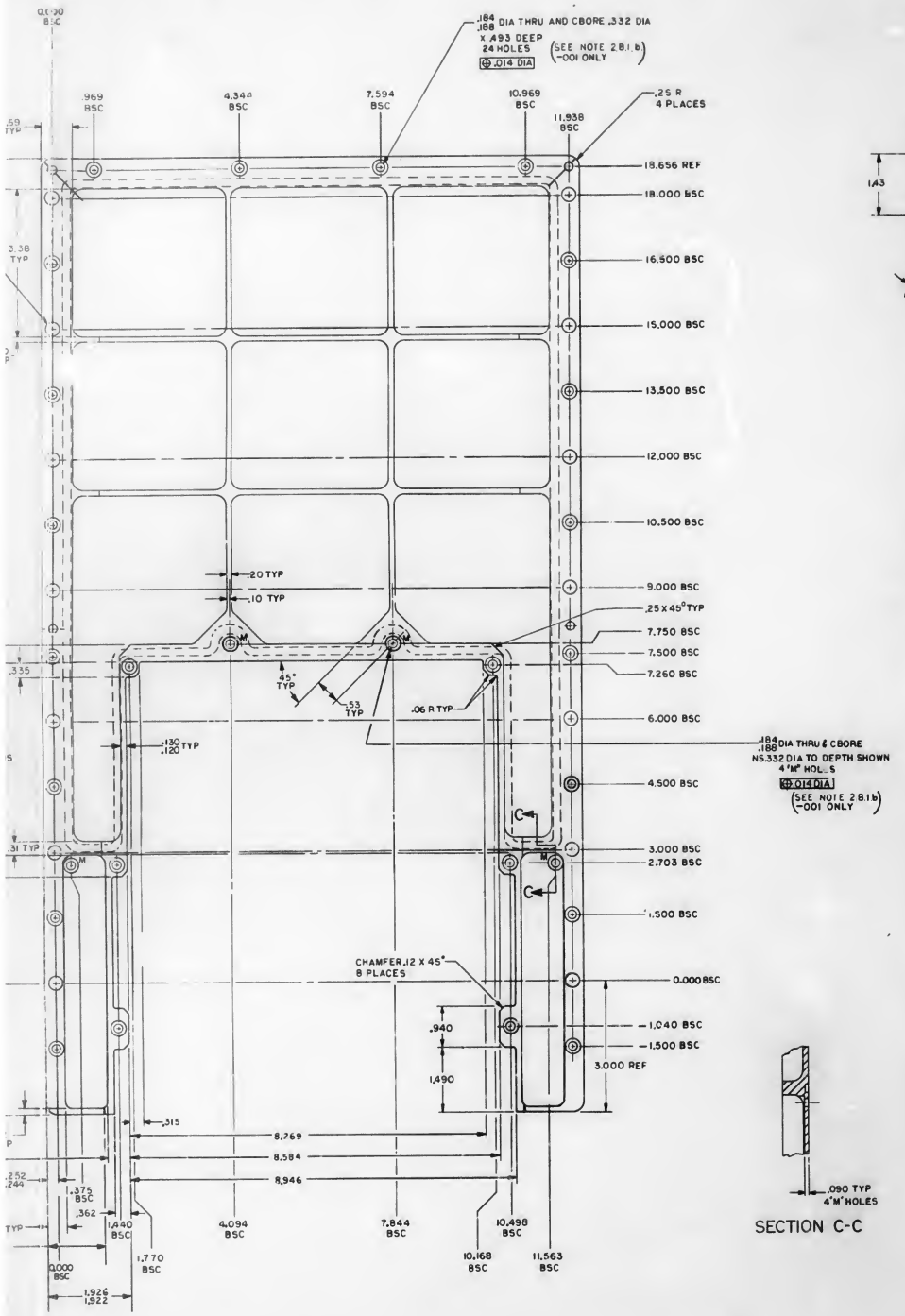

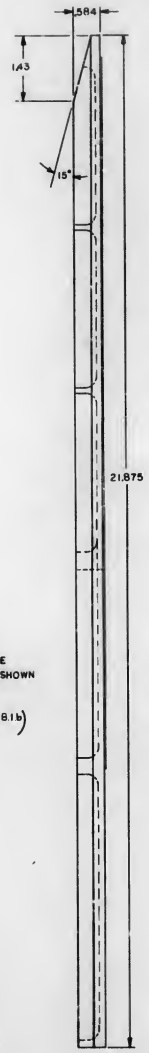

SECTION C-C

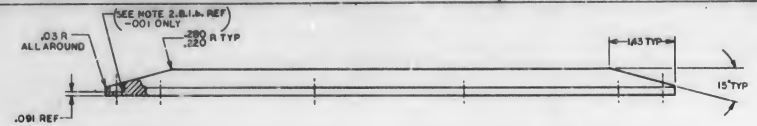

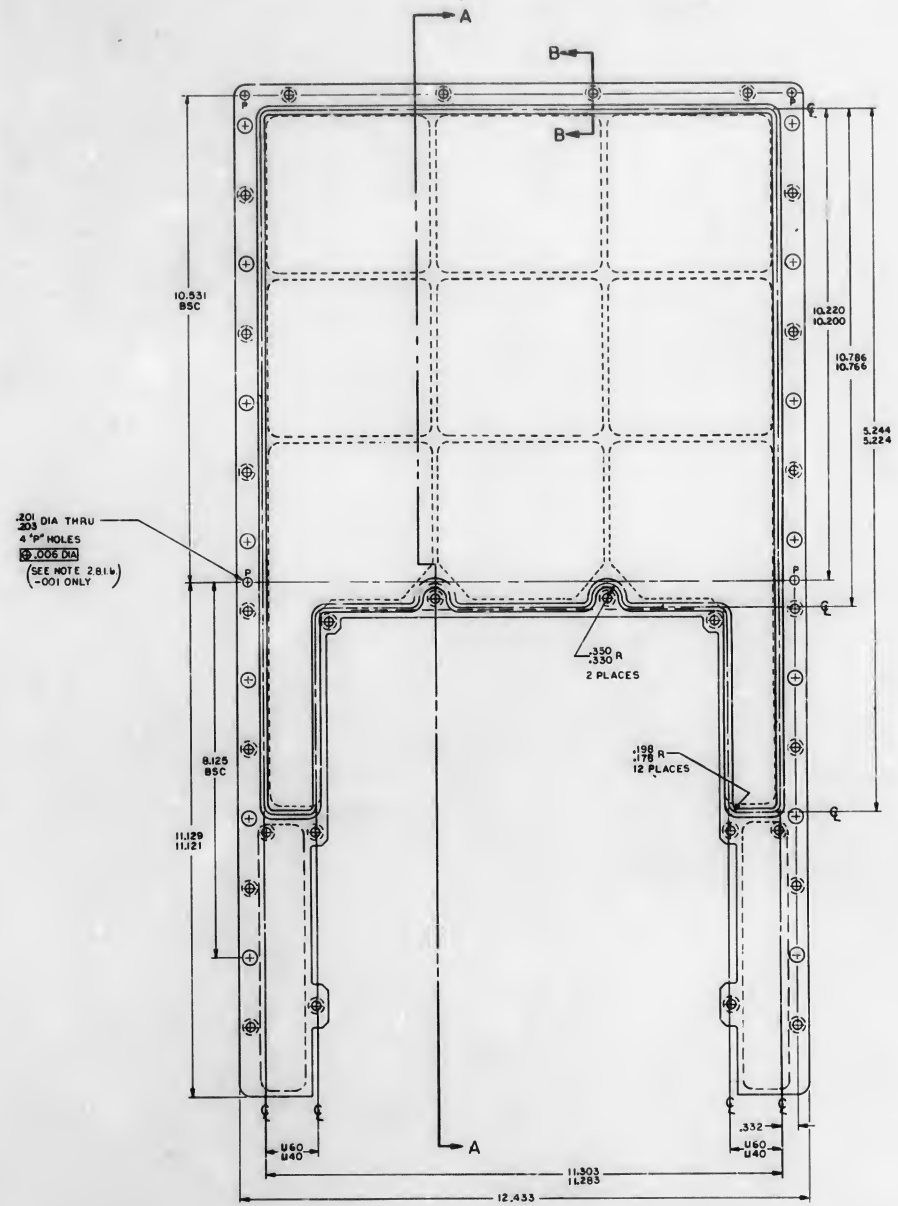

1006378 C

REQUIREMENTS:

1. GENERAL:
   - A. INTERPRET DRAWING IN ACCORDANCE WITH STANDARDS PRESCRIBED BY MIL-D-70327
   - B. SUPPLIER SHALL CONFORM TO QUALITY ASSURANCE PROVISIONS SPECIFIED IN N01015404, CLASS 3.
   - C. PRESERVATION, PACKAGING, PACKING, AND CONTAINER MARKING PER N01002215, CLASS 1 CODE 4

2. INSPECTION AND ACCEPTANCE:
   - A. MATERIAL:
     - (1) SEE CHART
     - (2) SEAL: BUTYL RUBBER PER AMS 3238.
   - B. FINISH:
     - (1) RETAINER:
       - a.) SEE CHART
       - b.) SEE REMARKS COLUMN IN CHART
   - C. SURFACE ROUGHNESS SHALL BE 125/ PER MIL-STD-10 UNLESS OTHERWISE SPECIFIED.
   - D. REMOVE ALL BURRS AND BREAK SHARP EDGES.
   - E. ALL INSIDE RADII TO BE .25 SPHERICAL
   - F. VENDOR SHALL SUPPLY CURE DATE OF ELASTOMER

3. DESIGN:
   - A. MAX. OPERATING TEMPERATURE: +200°F
   - B. OPERATING PRESSURE: 0-17 PSI DIFFERENTIAL
   - C. MEDIUM SEALED: 90% NITROGEN 10% HELIUM.
   - D. VACUUM SERVICE: 10^{-6} TORR
   - E. SEALING: WHEN PROPERLY INSTALLED AND COMPRESSED TO THE PLATE LEVEL (ZERO DEFLECTION OF MATING FLANGES) THE RUBBER SHALL BE CAPABLE OF SEALING AGAINST A LEAKAGE OF 10^{-8} ATM CC/SEC/INCH OF SEAL OF DRY NITROGEN AT A PRESSURE DIFFERENTIAL OF 1 ATMOSPHERE.

PART NO.	MATERIAL	FINISH	REMARKS
1006378-001	MAGNESIUM AZ 31B-M24 PER QQ-M-44 COND H24	FINISH PER _____	SURFACE SHALL BE FREE OF ANODIZE. TREAT SURFACE INDICATED PER DO NOT EPOXY COAT, ELECTRICAL BONDING REQUIRED
1006378-002	ALUM-6061-T6 PER QQ-A-250/11 TEMP 6	CHROMATE PER MIL-C-5541, TYPE II GRADE C, CLASS 3	

PROCURE ONLY FROM APPROVED SOURCES LISTED ON N01002034 FOR THIS DRAWING.

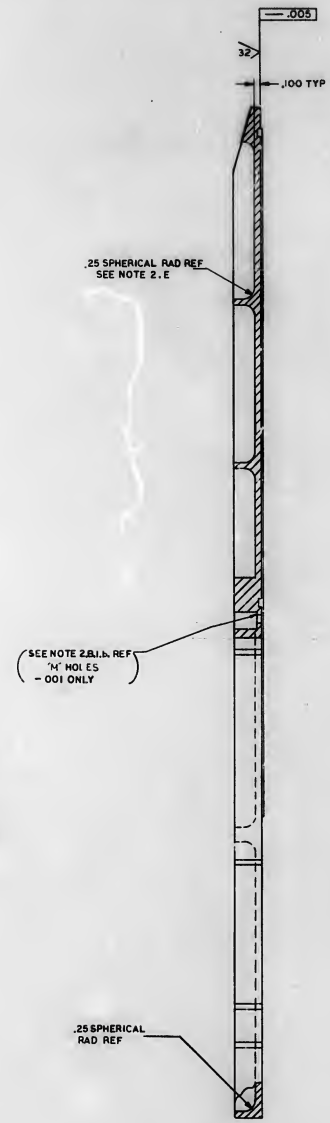

SECTION A-A

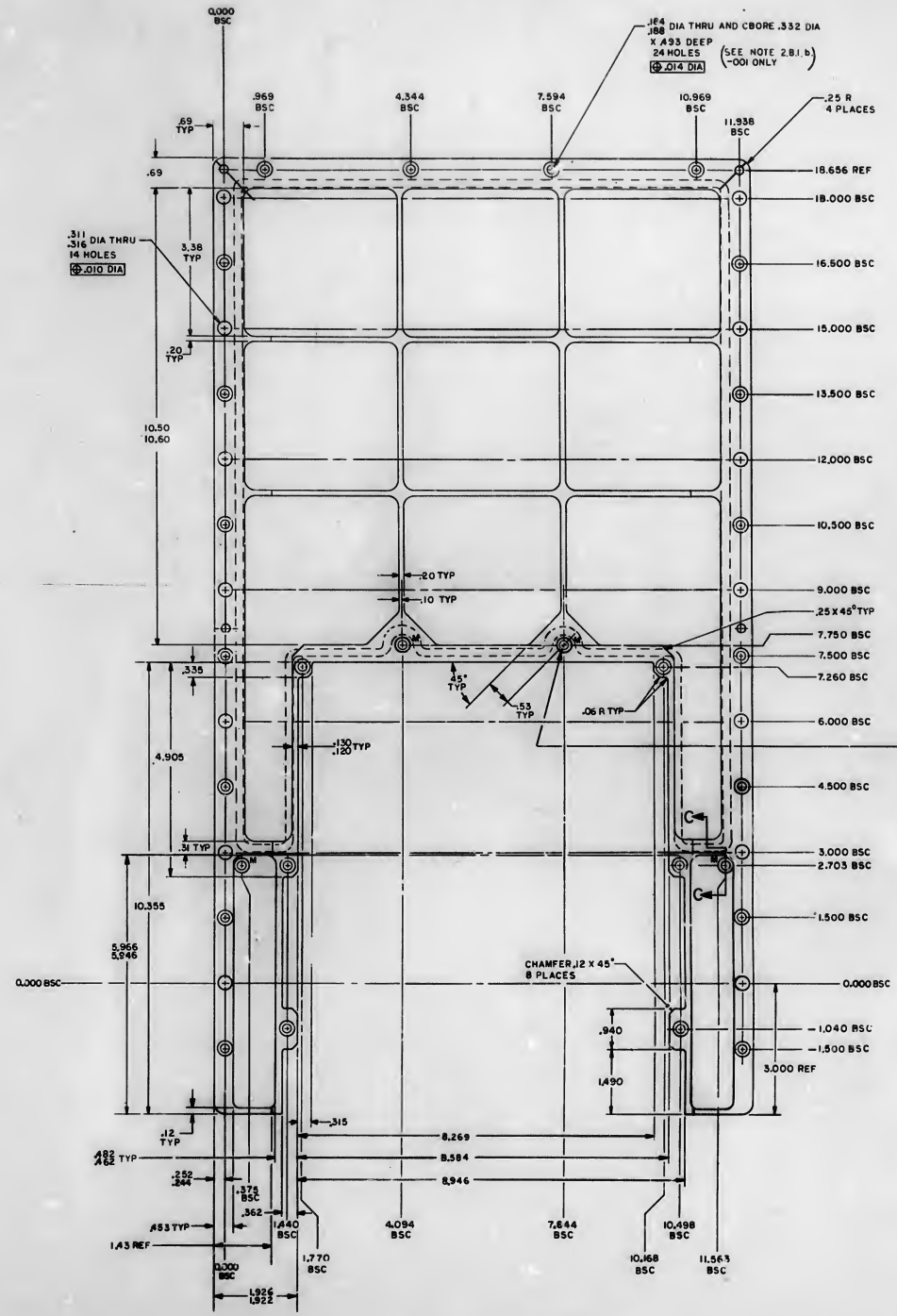

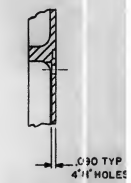

SECTION C-C

1006378 C

REVISIONS			
SYM	DESCRIPTION	DATE	APPROVAL
A	REVISED PER TDRR 04013		
B	REVISED PER TDRR 04135		
C	REVISED PER TDRR 06032		

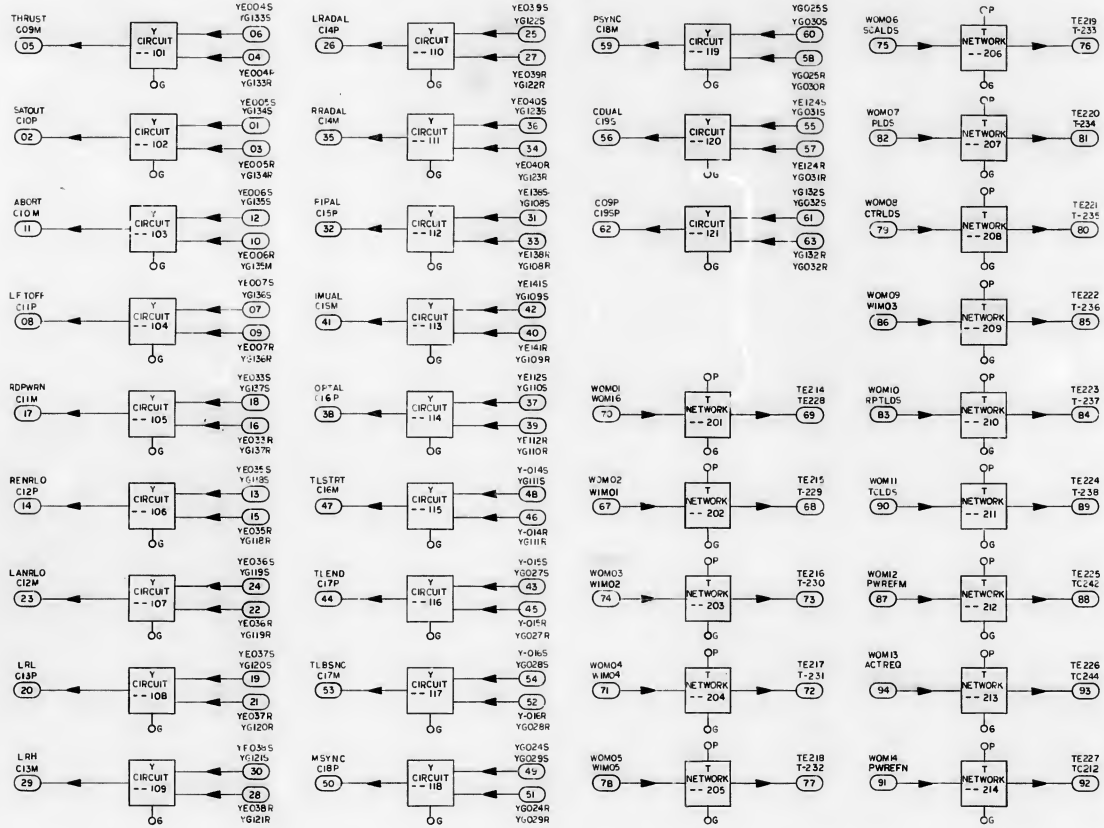

REFERENCE DWG:
1. 1006087: 'Y' TRANSFORMER INPUT CIRCUIT
2. 1006088: INTERFACE CIRCUITS

NOTES:
1. INTERPRET DRAWING IN ACCORDANCE WITH STANDARDS PRESCRIBED BY MIL-D-70327
2. CIRCUIT NUMBERS FOR COMPUTER POSITION 19 ARE PREFIXED BY 71
   CIRCUIT NUMBERS FOR COMPUTER POSITION 39 ARE PREFIXED BY 73
3. UPPER SIGNAL NAME USED IN COMPUTER POSITION 19
   LOWER SIGNAL NAME USED IN COMPUTER POSITION 39

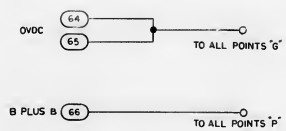

QTY REQD	PART OR IDENTIFYING NO	NOMENCLATURE OR DESCRIPTION	FIND NO.
		LIST OF MATERIALS	

UNLESS OTHERWISE SPECIFIED DIMENSIONS ARE IN INCHES
TOLERANCES ON
FRACTIONS ± DECIMALS ± ANGLES ±
DO NOT SCALE THIS DRAWING
MATERIAL
HEAT TREATMENT
FINAL FINISH
NEXT ASSY | USED ON
APPLICATION

MIT INSTRUMENTATION LAB
CAMBRIDGE MASS
DRAWN
CHECKED
APPROVAL
APPROVAL
NASA APPROVAL
MIT APPROVAL

MANNED SPACECRAFT CENTER
HOUSTON, TEXAS

FLOW DIAGRAM
INTERFACE MODULE A19 OR A39

CODE IDENT NO | SIZE E | NASA DRAWING NO. 1006534
SCALE NONE | WT | SHEET 1 OF 1

BANK SELECTOR
BANK SPACE
BANK REGISTER
ADDER SPACE
BANK SELECTOR

1006708

REVISIONS			
SYM	DESCRIPTION	DATE	APPROVAL
—	INITIAL RELEASE CLASS A PER TDRR 02617	8/14/63	WK

REQUIREMENTS:

1. GENERAL:
   - A. INTERPRET DRAWING IN ACCORDANCE WITH STANDARDS PRESCRIBED IN MIL-D-70327.
   - B. SUPPLIER SHALL CONFORM TO THE QUALITY ASSURANCE PROVISIONS AS CONTAINED IN ND 1015404, CLASS 3.
   - C. MARKING: PACKAGING SHALL BE MARKED IN ACCORDANCE WITH MIL-STD-129 WITH THE QUANTITY ENCLOSED, MANUFACTURER'S NAME AND/OR SYMBOL, NASA DRAWING NUMBER, AND REVISION LETTER.

2. ACCEPTANCE AND INSPECTION:
   - A. MECHANICAL PROPERTIES:
     - (1) DIMENSIONS: SEE SKETCH.

3. DESIGN:
   - A. MATERIAL OF TERMINAL LUG: BRASS PER QQ-B-626, COMPOSITION 22, 1/2 HARD.
   - B. FINISH: SOLDER (40 TO 70 PERCENT TIN)
     ELECTROPLATE .0003 MINIMUM THICK SILVER.
   - C. MATERIAL OF BASE: POLYTETRAFLUOROETHYLENE PER MIL-P-14078.
   - D. A CERTIFICATE OF COMPLIANCE WITH MATERIAL REQUIREMENTS SHALL BE SUPPLIED WITH EACH SHIPMENT.
   - E. ELECTRICAL CHARACTERISTICS:
     - (1) VOLTAGE RATING: 1000 VOLTS MINIMUM.
     - (2) CAPACITANCE: 0.60 MICROMICROFARADS MAXIMUM.
     - (3) FLASHOVER VOLTAGE (SEA LEVEL): 3000 VOLTS MINIMUM.

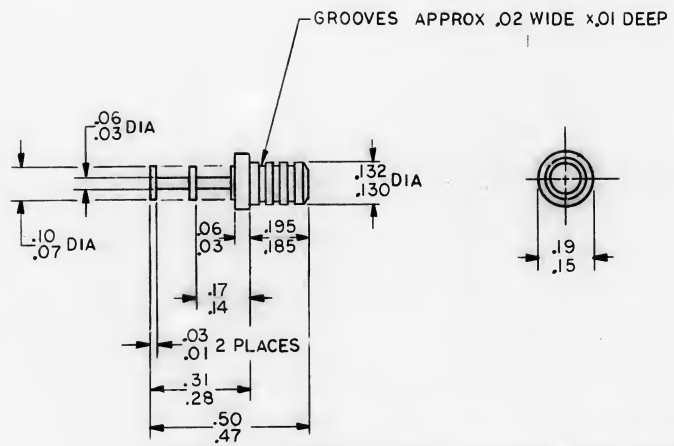

QTY REQD	PART OR IDENTIFYING NO.	NOMENCLATURE OR DESCRIPTION	FIND NO.

LIST OF MATERIALS

PROCURE ONLY FROM APPROVED SOURCES LISTED IN ND 1002034 FOR THIS DRAWING.

NEXT ASSY	USED ON
APPLICATION	

UNLESS OTHERWISE SPECIFIED DIMENSIONS ARE IN INCHES
TOLERANCES ON
FRACTIONS ± DECIMALS ± ANGLES ±
DO NOT SCALE THIS DRAWING
MATERIAL SEE NOTES
HEAT TREATMENT
FINAL FINISH

MIT INSTRUMENTATION LAB
CAMBRIDGE, MASS.
DWG. NO. CONTRACT

DRAWN J.D.H. Bennett DATE 20 JUN 63
CHECKED Reggie W. Maynard 25 JUL 63
APPROVAL
APPROVAL Eldon C. Hall 15 Aug 63
NASA APPROVAL W. J. Ehrie 8-14-63
MIT APPROVAL W. Ruppe 14 Aug 63

MANNED SPACECRAFT CENTER
HOUSTON, TEXAS

TERMINAL, STUD
INSULATED
SPECIFICATION CONTROL DRAWING

CODE IDENT NO. | SIZE C | NASA DRAWING NO. 1006708
SCALE NONE | WT | SHEET 1 OF 1

1006732 D

REVISIONS 04617

SYM	DESCRIPTION	DATE	APPROVAL
—	INITIAL RELEASE CLASS A PER TDRR 04617	13 Nov 63	WK
A	REVISED PER TDRR 05627	1/14/64	LH
B	REVISED PER TDRR 07624	4/1/64	LH
C	REVISED PER TDRR 24794	22 Dec 65	WK
D	REVISED PER TDRR 27682	3/31/66	WK

REQUIREMENTS:

1. GENERAL:

   A. INTERPRET DRAWING IN ACCORDANCE WITH STANDARDS PRESCRIBED BY MIL-D-70327.

   B. SUPPLIER SHALL CONFORM TO THE QUALITY ASSURANCE PROVISIONS AS CONTAINED IN ND 1015404, CLASS 3.

   C. MARKING: PACKAGING SHALL BE MARKED IN ACCORDANCE WITH MIL-STD-129 WITH THE MANUFACTURER'S NAME AND/OR SYMBOL, LOT OR SERIAL NUMBER, DATE OF MANUFACTURE OR CODING, NASA DRAWING NUMBER, REVISION LETTER, DASH NUMBER AND QUANTITY ENCLOSED AND THE PRECAUTIONARY WORDS "FRAGILE", "THIS END UP" AND "DO NOT DROP OR ROLL".

   PACKAGING: WIRE SHALL BE FURNISHED IN A BARREL PACK, THE BARREL DIAMETER SHALL BE 20 INCHES AND THE MINIMUM DIAMETER OF THE COIL SHALL BE 13 INCHES.

2. ACCEPTANCE AND INSPECTION:

   A. MECHANICAL REQUIREMENTS:

      (1) INSULATION: COLOR-PER TABLE 1

      (2) DIAMETER OF CONDUCTOR: 0.010 INCH + 0.0003, -0.0001 INCH.

      (3) DIAMETER OVER INSULATION: 0.021 INCH, ± 0.0015 INCH.

      (4) MATERIAL OF CONDUCTOR: SOLID, NON-MAGNETIC, HIGH STRENGTH COPPER ALLOY WITH 98 PERCENT COPPER MINIMUM, SILVER PLATED 40 MICROINCHES MINIMUM. TO 80 MICROINCHES MAXIMUM. A CERTIFICATE OF COMPLIANCE SHALL ACCOMPANY EACH SHIPMENT.

      (5) MINIMUM CONTINUOUS LENGTH: 500 FEET.

      (6) FLAMMABILITY: INSULATION SHALL NOT SUPPORT COMBUSTION.

      (7) STRIP FORCE: THE INSULATION PULL-OFF FORCE FOR A 3 INCH STRIP SHALL BE 8 OUNCES MINIMUM, 5 POUNDS MAXIMUM.

   B. ELECTRICAL CHARACTERISTICS:

      (1) DC RESISTANCE: 125 OHMS MAXIMUM PER 1000 FEET.

      (2) VOLTAGE RATING: 300 VOLTS RMS.

      (3) DIELECTRIC STRENGTH: 1000 VOLTS RMS, MINIMUM AFTER 4 HOURS IN WATER 25°C PLUS OR MINUS 5°C, SAMPLE BASIS.

      (4) INSULATION RESISTANCE: 2500 MEGOHMS MINIMUM PER 1000 FEET AFTER 4 HOURS IN WATER 25°C PLUS OR MINUS 5°C.

3. DESIGN:

   A. OPERATING TEMPERATURE: 140°C, MAXIMUM.

   B. TENSILE STRENGTH: 50,000 POUNDS PER SQUARE INCH, MINIMUM. TO 70,000 POUNDS PER SQUARE INCH MAXIMUM.

   C. ELONGATION: 7.5 PERCENT MINIMUM.

   D. SPLICES: SPLICES SHALL HAVE INSULATION STRIPPED 2" ON EACH SIDE AND THE ENDS SHALL BE TIED IN A KNOT.

   E. DIELECTRIC CONSTANT: 3.3 MAXIMUM AT 60 CPS AND 77°F.

   F. CONCENTRICITY: AT ANY CROSS SECTION ALONG THE LENGTH OF THE COMPLETED WIRE THE MINIMUM THICKNESS OF THE INSULATION SHALL NOT BE LESS THAN 41 PERCENT OF THE DIFFERENCE BETWEEN THE MEASURED DIAMETER OVER THE INSULATION AND THE MEASURED DIAMETER OVER THE CONDUCTOR, OR NOT LESS THAN 70 PERCENT OF THE MAXIMUM THICKNESS AT THAT CROSS-SECTION.

   G. HEAT RESISTANCE: INSULATION SHALL WITHSTAND 500 VOLTS MINIMUM AFTER 96 HOURS AT 150°C.

   H. COLD BEND: INSULATION SHALL WITHSTAND 500 VOLTS MINIMUM AFTER 4 HOURS AT -65°C AND BENT AROUND A 1/2 INCH DIAMETER MANDREL.

   J. INSULATION CUT-THROUGH: AT A TEMPERATURE OF 50°C THE INSULATION SHALL RESIST THE PENETRATION OF A STANDARD U.L. CHISEL TESTER WITH A 90° CUTTING EDGE OF .005 INCH RADIUS, WEIGHTED WITH 300 GRAMS APPLIED AT THE POINT OF CONTACT FOR 24 HOURS. THERE SHALL BE NO ELECTRICAL CONTINUITY BETWEEN THE BLADE AND THE CONDUCTOR WHEN A POTENTIAL OF 500 VOLTS RMS IS APPLIED.

   K. MINIMUM CURL OF WIRE: WHEN A 30 INCH LENGTH OF WIRE IS CUT FROM A BARREL OR SPOOL, THE WIRE, WHEN LYING UNRESTRAINED ON A SMOOTH, FLAT SURFACE, SHALL NOT CURL UP TO A DIAMETER OF LESS THAN 10 INCHES WITHIN ONE MINUTE AT AMBIENT TEMPERATURES.

   L. SPARK TEST: 1500 VOLTS RMS.

   M. APPROVED MATERIALS: MONOTRIFLOROETHELYNE (KEL-F MODIFIED)

TABLE 1

NASA DWG. NO.	COLOR
1006732-1	YELLOW
-2	RED
-3	BLUE

PROCURE ONLY FROM APPROVED SOURCES LISTED IN ND 1002034 FOR THIS DRAWING.

QTY REQD	PART OR IDENTIFYING NO.	NOMENCLATURE OR DESCRIPTION	FIND NO.

LIST OF MATERIALS

NEXT ASSY	USED ON
APPLICATION	

UNLESS OTHERWISE SPECIFIED DIMENSIONS ARE IN INCHES
TOLERANCES ON
FRACTIONS ± DECIMALS ± ANGLES ±
DO NOT SCALE THIS DRAWING
MATERIAL SEE NOTES
HEAT TREATMENT
FINAL FINISH

MIT INSTRUMENTATION LAB CAMBRIDGE, MASS.
DWG. NO. CONTRACT
DRAWN DATE 10 Oct 63
CHECKED
APPROVAL
APPROVAL 8 Nov 63
NASA APPROVAL 11/8/63
MIT APPROVAL 13 Nov 63

MANNED SPACECRAFT CENTER
HOUSTON, TEXAS

WIRE, ELECTRICAL, INSULATED

SPECIFICATION CONTROL DRAWING

CODE IDENT NO. —
SIZE C
NASA DRAWING NO. 1006732
SCALE NONE WT SHEET 1 OF 1

K 1006776

REVISIONS

SYM	DESCRIPTION	DATE	APPROVAL
G	REPLACES REV F WITH CHANGE PER TDRR 08859	5/26/64	DJR
H	REVISED PER TDRR 10887	8/24/64	WK
J	REVISED PER TDRR 27363	5/25/66	WK
K	REVISED PER TDRR 28432	5/10/66	[illegible]

REQUIREMENTS:

1. GENERAL

A. INTERPRET DRAWING IN ACCORDANCE WITH STANDARDS PRESCRIBED IN MIL-D-70327.

B. SUPPLIER PROCESS AND QUALITY CONTROL, INCLUDING FINAL INSPECTION, SHALL BE IN ACCORDANCE WITH SPECIFICATION ND 1015404 CLASS 3.

C. EACH SHIPPING AND UNIT CONTAINER SHALL BE PERMANENTLY AND LEGIBLY MARKED WITH THE MANUFACTURER'S NAME AND/OR SYMBOL, ITEM NAME, NASA DRAWING NUMBER AND REVISION LETTER, NET CONTENTS AND LOT NUMBER.

2. ACCEPTANCE AND INSPECTION:

A. INSULATION ON SLEEVING SHALL BE POLYTETRAFLUOROETHYLENE RESIN, NON-RIGID, AND SHALL CONFORM TO THE ACCEPTANCE REQUIREMENTS OF MIL-I-22129 WITH THE FOLLOWING EXCEPTIONS:

(1) COLORS SHALL BE IN ACCORDANCE WITH MIL-STD-104 AND AS INDICATED BY THE DASH NUMBER, TABLE I, OF THIS DRAWING.

(2) INSIDE DIAMETER AND WALL THICKNESS SHALL BE IN ACCORDANCE WITH TABLE I OF THIS DRAWING.

B. CRACK AND SPLIT RESISTANCE

THE SLEEVING SHALL NOT SPLIT OR CRACK WHEN TESTED AS FOLLOWS:

ONE 6 INCH SAMPLE OF SLEEVING SHALL BE SELECTED FROM EACH END OF EACH COIL. INSERT A SOFT COPPER WIRE APPROXIMATELY .005 INCH SMALLER IN DIAMETER THAN THE MINIMUM SLEEVING I.D. AND WRAP THIS CONFIGURATION FIVE CLOSE TURNS UPON ITSELF. PREPARED SAMPLES SHALL BE PLACED IN A 550° TO 560°F. OVEN FOR 24 +1/2-0 HOURS. REMOVE SAMPLES FROM OVEN, COOL TO ROOM TEMPERATURE AND EXAMINE. REJECT ANY COIL FROM WHICH SAMPLES HAVE BEEN TAKEN THAT SHOW SPLITS OR CRACKS.

3. DESIGN REQUIREMENTS:

A. MATERIAL SHALL COMPLY WITH THE REQUIREMENTS OF MIL-I-22129 WITH THE EXCEPTION OF COLOR, INSIDE DIAMETER AND WALL THICKNESS WHICH SHALL BE AS SPECIFIED HEREIN.

B. INTENDED USE: THIS MATERIAL IS INTENDED FOR USE AS AN ELECTRICAL INSULATION SLEEVING WHICH WILL NOT SUPPORT COMBUSTION AND WHERE OPERATING TEMPERATURES RANGE FROM -65°C TO +260°C

C. TENSILE STRENGTH: 2500 P.S.I. MIN 6000 PSI MAX @ 200% ELONGATION (PER FEDERAL TEST METHOD STD. NO. 601, METHOD 4111) MINIMUM RETENTION OF INITIAL VALUE 95% AFTER AGING 96 HOURS AT 250° C

D. OPERATING TEMPERATURE RANGE: -65°C TO +260°C.

E. BREAKDOWN VOLTAGE: (MINIMUM VALUE REQUIRED VOLTS @ 60 CYCLES RMS) WALL THICKNESS

.009	11.500
.012	14.600
.016	16.300
.020	17.000

(G) REPLACES REV (F) WITH CHANGE

PROCURE ONLY FROM APPROVED SOURCES LISTED ON ND1002034 FOR THIS DRAWING

QTY REQD	PART OR IDENTIFYING NO.	NOMENCLATURE OR DESCRIPTION	FIND NO.

LIST OF MATERIALS

NEXT ASSY	USED ON
APPLICATION	

UNLESS OTHERWISE SPECIFIED DIMENSIONS ARE IN INCHES
TOLERANCES ON
FRACTIONS ± DECIMALS ± ANGLES ±
DO NOT SCALE THIS DRAWING
MATERIAL: SEE NOTE
HEAT TREATMENT: N/A
FINAL FINISH: N/A

MIT INSTRUMENTATION LAB, CAMBRIDGE, MASS.
DWG. NO. CONTRACT
DRAWN B. Copia DATE 8/24/64
CHECKED G. Mayo 5-22-64
APPROVAL G. MAYO 5/6/64
APPROVAL [illegible] 5/27/64
NASA APPROVAL [illegible] 5/14/64
MIT APPROVAL [illegible] 5/26/64

MANNED SPACECRAFT CENTER
HOUSTON, TEXAS

INSULATION SLEEVING ELECTRICAL
SPECIFICATION CONTROL DRAWING

CODE IDENT NO. ——— | SIZE C | NASA DRAWING NO. 1006776
SCALE NONE | WT | SHEET 1 OF 2

K 1006776

REVISIONS

SYM	DESCRIPTION	DATE	APPROVAL
G	THIS SHEET ADDED PER TDRR 08859	5/26/64	[illegible]
H	REVISED PER TDRR 10887	[illegible]	WK
J	REVISED PER TDRR 27363	2/24/66	WK
K	REVISED PER TDRR 28432	5/6/66	[illegible]

TABLE I

AWG SIZE	LB/FT CALC	DIMENSIONS I.D.	DIMENSIONS WALL THICKNESS	DASH NO. COLOR-WHITE	DASH NO. COLOR-BLACK	DASH NO. COLOR-BROWN	DASH NO. COLOR-RED	DASH NO. COLOR-ORANGE	DASH NO. COLOR-YELLOW	DASH NO. COLOR-GREEN	DASH NO. COLOR-BLUE	DASH NO. COLOR-VIOLET	DASH NO. COLOR-GREY
1	.021	.311-.289		1	26	51	76	101	126	151	176	201	226
2	.019	.278-.258		2	27	52	77	102	127	152	177	202	227
3	.017	.249-.229		3	28	53	78	103	128	153	178	203	228
4	.015	.224-.204		4	29	54	79	104	129	154	179	204	229
5	.014	.198-.182	.016	5	30	55	80	105	130	155	180	205	230
6	.012	.178-.162	.024	6	31	56	81	106	131	156	181	206	231
7	.011	.158-.144		7	32	57	82	107	132	157	182	207	232
8	.010	.141-.129		8	33	58	83	108	133	158	183	208	233
9	.007	.124-.114		9	34	59	84	109	134	159	184	209	234
10	.003	.112-.102		10	35	60	85	110	135	160	185	210	235
11	.003	.101-.091		11	36	61	86	111	136	161	186	211	236
12	.003	.089-.081		12	37	62	87	112	137	162	187	212	237
13	.002	.080-.072		13	38	63	88	113	138	163	188	213	238
14	.002	.072-.064	.013	14	39	64	89	114	139	164	189	214	239
15	.002	.067-.057	.019	15	40	65	90	115	140	165	190	215	240
16	.002	.061-.051		16	41	66	91	116	141	166	191	216	241
17	.002	.054-.045		17	42	67	92	117	142	167	192	217	242
18	.002	.049-.040		18	43	68	93	118	143	168	193	218	243
19	.002	.044-.036		19	44	69	94	119	144	169	194	219	244
20	.002	.039-.032		20	45	70	95	120	145	170	195	220	245
22	.002	.029-.025	.010	21	46	71	96	121	146	171	196	221	246
24	.002	.027-.020	.014	22	47	72	97	122	147	172	197	222	247
26	.001	.020-.016	.007	23	48	73	98	123	148	173	198	223	248
28	.001	.017-.013	.011	24	49	74	99	124	149	174	199	224	249
30	.001	.014-.010		25	50	75	100	125	150	175	200	225	250

(G) THIS SHEET ADDED

QTY REQD	PART OR IDENTIFYING NO.	NOMENCLATURE OR DESCRIPTION	FIND NO.

LIST OF MATERIALS

NEXT ASSY	USED ON
APPLICATION	

UNLESS OTHERWISE SPECIFIED DIMENSIONS ARE IN INCHES
TOLERANCES ON
FRACTIONS ± DECIMALS ± ANGLES ±
DO NOT SCALE THIS DRAWING

MATERIAL: SEE NOTE
HEAT TREATMENT: N/A
FINAL FINISH: N/A

MIT INSTRUMENTATION LAB, CAMBRIDGE, MASS.
DWG. NO. CONTRACT

DRAWN [illegible] DATE [illegible]
CHECKED G. Mayo 5-22-64
APPROVAL G. MAYO 5/22/64
APPROVAL [illegible] 5/22/64
NASA APPROVAL [illegible] 5/26/64
MIT APPROVAL [illegible] 5/26/64

MANNED SPACECRAFT CENTER
HOUSTON, TEXAS

INSULATION SLEEVING ELECTRICAL SPECIFICATION CONTROL DRAWING

CODE IDENT NO. ——— | SIZE C | NASA DRAWING NO. 1006776
SCALE NONE | WT | SHEET 2 OF 2

S 9089001

REVISIONS TDRR01101

SYM	DESCRIPTION	DATE	APPROVAL
—			
A	REVISED PER TDRR 02393	8/7/63	[illegible]
B	REVISED PER TDRR 02620	8/14/63	WK
C	REVISED PER TDRR 02813	8/28/63	RA
D	REVISED PER TDRR 03512	30 Oct 63	WK
E	REVISED PER TDRR 04001	12 Dec 63	WK
F	REVISED PER TDRR 04182	10/30/63	WK
G	REVISED PER TDRR 06955	3/17/64	WK
H	REVISED PER TDRR 10115	6/11/64	[illegible]
J	REVISED PER TDRR 16805	3/12/65	WK
K	REVISED PER TDRR 17477	3-23-65	WK
L	REVISED PER TDRR 18240	7/65	WK
M	REVISED PER TDRR 18627	5/24/65	WK
N	REVISED PER TDRR 21413	8/11/65	WK
P	REVISED PER TDRR 22436	9/24/65	WK
R	REVISED PER TDRR 23171	11/5/65	WK
S	REVISED PER TDRR 23876	11/23/65	WK

REQUIREMENTS:

1. GENERAL:

   A. INTERPRET DRAWING IN ACCORDANCE WITH STANDARDS PRESCRIBED IN MIL-D-70327.

   B. MATERIAL SHALL BE CAPABLE OF MEETING THE APPLICABLE REQUIREMENTS OF MIL-I-15126, EXCEPT AS AND IN ADDITION TO THE REQUIREMENTS SPECIFIED HEREIN.

   C. SUPPLIERS SHALL CONFORM TO THE QUALITY ASSURANCE PROVISIONS AS CONTAINED IN ND 1015404, CLASS 3.

   D. PACKAGING: TAPE SHALL BE PACKAGED IN SUCH FASHION AS TO PREVENT ANY DEFORMITY IN SHAPE OR CONTOUR OF THE ROLLS DURING SHIPMENT.

   E. MARKING: UNIT PACKAGES, INTERMEDIATE PACKAGES AND EXTERIOR SHIPPING CONTAINERS SHALL BE PERMANENTLY AND LEGIBLY MARKED WITH THE MANUFACTURER'S NAME AND/OR SYMBOL, TYPE NUMBER, WIDTH, EXPIRATION DATE AS WELL AS THE NASA DRAWING NUMBER, DASH NUMBER AND REVISION LETTER PER MIL-STD-129.

2. ACCEPTANCE AND INSPECTION:

   A. PHYSICAL PROPERTIES: PER TABLE I.

   B. MARKING: PER PARAGRAPH 1 E.

   C. TAPE SHALL BE A MYLAR, POLYESTER FILM, WITH A THERMOSETTING, PRESSURE SENSITIVE, ADHESIVE. SUPPLIER SHALL CERTIFY THAT TYPE A (CLEAR) MYLAR OR EQUIVALENT WAS USED TO FABRICATE SHIPMENT.

   D. THICKNESS, WITH ADHESIVE, LESS LINER: SEE TABLE I, CONDITION C-96/23/50.

3. DESIGN:

   B. TEMPERATURE RANGE: -55° TO +130°C.

   C. CURING REQUIREMENTS; RECOMMENDED: 3 HOURS AT +250°F, OR 2 HOURS AT +275°F, OR 1 HOUR AT +300°F, OR 24 HOURS IN AIR.

   D. LINER: SHALL BE SILICONE TREATED CREPE PAPER 0.005 ± .002 THICK SEE TABLE I. LINER FOR DASH NO-2 SHALL BE SPLIT LENGTHWISE IN 2 PLACES, EACH SIDE @ .300 ± .010 FROM EACH EDGE.

   E. STORAGE LIFE: 2 YEARS FROM THE DATE OF ORIGINAL MANUFACTURE WHEN STORED AT +25°C UNDER AMBIENT ROOM CONDITIONS.

      (1) EXPIRATION DATE: SHALL BE SPECIFIED AND DETERMINED FROM THE STORAGE LIFE.

   F. CHARACTERISTICS: (TYPICAL)

      (2) TENSILE STRENGTH: 16 POUNDS MIN PER INCH WIDTH, CONDITION C-96/23/50.

      (3) ADHESION TO STEEL: 38 OUNCES MIN PER INCH WIDTH, CONDITION C-96/23/50.

      (4) INDIRECT ELECTROLYTIC CORROSION: 1 X 10^{-12} MHOS, CONDITION C-18/23/96.

      (5) DIELECTRIC BREAKDOWN: 4500 VOLTS RMS, CONDITION C-96/23/96.

      (6) INSULATION RESISTANCE: 1 X 10^{6} MEGOHMS, MINIMUM AT 500 VOLTS DC, CONDITION C-96/23/96.

      (7) ADHESION TO BACKING: 8 OUNCES PER INCH WIDTH, CONDITION C-96/23/50.
          25 OUNCES PER INCH WIDTH, CONDITION E-2/130.

      (8) BOND SEPARATION AFTER CURE: 30 MINUTES.

      (9) RESISTANCE TO PENETRATION AT ELEVATED TEMPERATURES: +200°C. (AS DEFINED PER MIL-I-15126)

      (10) ELONGATION: 55 PERCENT, MAXIMUM.

      (11) LENGTH PER ROLL: 36 YDS.

TABLE I CONTINUED

PHYSICAL PROPERTIES

DASH NO.	WIDTH	COATING	LINER	THICKNESS	ADHESIVE COLOR
-22	.295±.002	SINGLE	NONE	.003/.005	YELLOW
-23	.089±.002	SINGLE	NONE	.003/.005	YELLOW
-24	0.400±.005	SINGLE	NONE	.005/.003	YELLOW
-25	0.600±.005	TRIPLE	SINGLE	.021/.011	YELLOW
-26	.188±.010	SINGLE	SINGLE	.005/.003	YELLOW
-27	0.580 ±.002	DOUBLE	DOUBLE	.0066 /.0056	YELLOW
-28	0.480 ±.002	DOUBLE	DOUBLE	.0066/.0056	YELLOW
-29	0.218 ±.002	SINGLE	NONE	.0027/.0020	YELLOW
-30	0.448 ±.005	SINGLE	NONE	.006/.004	YELLOW
-31	0.448 ±.005	DOUBLE	SINGLE	.007/.005	YELLOW

TABLE I

PHYSICAL PROPERTIES

DASH NO.	WIDTH	COATING	LINER	THICKNESS	ADHESIVE COLOR
-1	0.800 ± .002	DOUBLE	DOUBLE	.0066 .0056	YELLOW
-2	1.400 ± .002	DOUBLE	DOUBLE	.0066 .0056	"
-3	0.600 ± .002	DOUBLE	DOUBLE	.0066 .0056	"
-4	0.500 ± .002	DOUBLE	DOUBLE	.0066 .0056	"
-5	0.700 ± .002	DOUBLE	DOUBLE	.0066 .0056	"
-6	0.188 ± .002	DOUBLE	DOUBLE	.0066 .0056	"
-7	0.500 ± .005	SINGLE	NONE	.004 .002	"
-8	0.700 ± .005	SINGLE	NONE	.004 .002	"
-9	0.800 ± .005	SINGLE	NONE	.004 .002	"
-10	0.900 ± .005	DOUBLE	DOUBLE	.0066/.0056	"
-11	0.800 ± .002	DOUBLE	DOUBLE	.0076/.0066	"
-12	1.400 ± .002	DOUBLE	DOUBLE	.0076/.0066	"
-13	.500 ± .002	DOUBLE	DOUBLE	.0076/.0066	"
-14	0.700 ± .002	DOUBLE	DOUBLE	.0076/.0066	"
-15	0.700 ± .005	SINGLE	NONE	.005/.003	"
-16	0.600 ± .005	SINGLE	SINGLE	.021/.011	"
-17	0.218 ± .002	SINGLE	NONE	.004/.002	"
-18	0.218 ± .002	DOUBLE	DOUBLE	.0066/.0056	"
-19	.060±.002	SINGLE	NONE	.003/.005	"
-20	.334±.002	SINGLE	NONE	.003/.005	"
-21	.502±.002	SINGLE	NONE	.003/.005	"

SEE NOTE 3.D.1.

QTY REQD	PART OR IDENTIFYING NO.	NOMENCLATURE OR DESCRIPTION	FIND NO.

LIST OF MATERIALS

NEXT ASSY	USED ON
APPLICATION	

UNLESS OTHERWISE SPECIFIED DIMENSIONS ARE IN INCHES
TOLERANCES ON
FRACTIONS ± DECIMALS ± ANGLES ±
DO NOT SCALE THIS DRAWING

MATERIAL: SEE NOTES

HEAT TREATMENT: NONE

FINAL FINISH: NONE

MIT INSTRUMENTATION LAB, CAMBRIDGE, MASS.
DWG. NO. CONTRACT
DRAWN A. Yuhas DATE 16 APR 63
CHECKED [illegible] 16 APR 63
APPROVAL [illegible] 30 APR 63
APPROVAL

NASA APPROVAL [illegible] 7-1-63
MIT APPROVAL [illegible]

MANNED SPACECRAFT CENTER
HOUSTON, TEXAS

INSULATION TAPE, ELECTRICAL
THERMOSETTING ADHESIVE
SPECIFICATION CONTROL DRAWING

CODE IDENT NO. —
SIZE C
NASA DRAWING NO. 1006806
SCALE NONE WT
SHEET 1 OF 1

PROCURE ONLY FROM APPROVED SOURCES LISTED ON ND1002034 FOR THIS DRAWING.

MAS ER

REVISIONS

SYM	ZONE	DESCRIPTION	DR	CHK	DATE	APPROVED
	D	REPLACES REV C WITH CHANGES PER TDRR 17169			3-9-65	WK

REQUIREMENTS

1. GENERAL:

   A. INTERPRET DRAWING IN ACCORDANCE WITH STANDARDS PRESCRIBED BY MIL-D-70327.

   B. SUPPLIER PROCESS AND QUALITY CONTROL INCLUDING FINAL TESTING SHALL BE IN ACCORDANCE WITH SPECIFICATION ND1015404, CLASS 3.

   C. EACH CONTAINER OF THE COMPOUND OR UNIT CARTON, IF PROCURED IN COLLAPSIBLE TUBES, SHALL BE PERMANENTLY AND LEGIBLY MARKED WITH THE MANUFACTURER'S NAME AND/OR SYMBOL, ITEM NAME, NASA DRAWING NUMBER AND REVISION LETTER, NET CONTENTS, LOT NUMBER AND DATE OF MANUFACTURER.

2. ACCEPTANCE AND INSPECTION:

   A. MATERIAL: THE COMPOUND SHALL BE A SILICONE OIL BLENDED TO A PASTE-LIKE CONSISTENCY WITH INORGANIC SILICA AND METAL OXIDES.

      (1) COLOR: OPAQUE WHITE

      (2) CONSISTENCY: WORKED AND MEASURED WITHIN ONE MINUTE AFTER WORKING PENETRATION 250 TO 320 WHEN TESTED PER ASTM D217.

      (3) SPECIFIC GRAVITY: 2.3 MINIMUM AT 77° ± 2°F WHEN TESTED PER METHOD 4184 OF FED. STD. 141 OR EQUIVALENT.

      (4) THERMAL CONDUCTIVITY: 0.0015 gm/cal/sec/cm^2/C°/CM

      (5) BLEED: THE BLEED SHALL BE 0.5% MAXIMUM AND THE EVAPORATION SHALL BE 1.0% MAXIMUM WHEN TESTED PER METHOD 321.1 OF FED. STD 791 OR EQUIVALENT EXCEPT THAT:

         (a) THE CONE SHALL BE SUSPENDED FROM A ROD SUPPORTED ON THE EDGE OF THE BEAKER, WITHOUT COVERING THE BEAKER.

         (b) THE OVEN SHALL BE MAINTAINED AT 200° ± 5°C.

         (c) THE TEST TIME SHALL BE 24 HOURS AT 200°C WHEN TESTED USING EQUIPMENT PER MIL-I-8660.

      (6) EVAPORATION: LESS THAN 1.0% AFTER 24 HOURS AT 200°C WHEN TESTED USING EQUIPMENT PER MIL-I-8660.

3. DESIGN:

   A. OPERATING TEMPERATURE RANGE: -70°C TO +200°C.

   B. SERVICE LIFE: 1 YEAR MINIMUM OF TEMPERATURE UP TO 200°C WITHOUT DETERIORATION.

   C. SHELF LIFE: THE MATERIAL SHALL HAVE NOT LESS THAN ONE YEAR SHELF LIFE REMAINING WHEN RECEIVED BY THE PURCHASER AND STORED BELOW 100°F IN UNOPENED CONTAINER.

   D. INTENDED USE: THIS MATERIAL IS INTENDED FOR USE IN INCREASING HEAT TRANSFER BETWEEN MATING SURFACES. A TYPICAL THERMAL CONDUCTIVITY FOR THIS MATERIAL IS 0.0010 GRAM-CALORIES /SEC/CM^2/°C/CM

   AS AN ELECTRICAL INSULATOR, THE VOLUME RESISTIVITY IS 2.5 X 10^{15} OHM-CM (TYPICAL)

(D) REPLACES REV (C) WITH CHANGE

QTY REQD	PART OR IDENTIFYING NO.	MATERIAL OR NOTES	NOMENCLATURE OR DESCRIPTION	FIND NO.

LIST OF MATERIALS

NEXT ASSY	USED ON
APPLICATION	

UNLESS OTHERWISE SPECIFIED
DIMENSIONS ARE IN INCHES
CAPACITOR VALUES ARE IN µf
RESISTOR VALUES ARE IN OHMS
TOLERANCES ON
FRACTIONS ± — DECIMALS ± — ANGLES ± —
DO NOT SCALE THIS DRAWING

MATERIAL

MIT INSTRUMENTATION LAB
CAMBRIDGE, MASS.

MANNED SPACECRAFT CENTER
HOUSTON, TEXAS

DRAWN	A. Martin	3-4-65
CHECKED	W. Simpson	3-4-65
APPROVED	[illegible]	4 Mar 65
APPROVED		
APPROVED MIT	W. Kupfer	9 Mar 65
APPROVED MSC	W. J. Phillips	3 Feb 65

DATE

SILICONE COMPOUND
THERMOCONDUCTIVE

SPECIFICATION CONTROL DRAWING

CODE IDENT NO. —

SIZE C

DRAWING NO. 1006879

SCALE NONE

SHEET 1 OF 1

MASTER

REVISIONS						
SYM	ZONE	DESCRIPTION	DR	CHK	DATE	APPROVED
A		REVISED PER TDRR 17742	JM		820651	

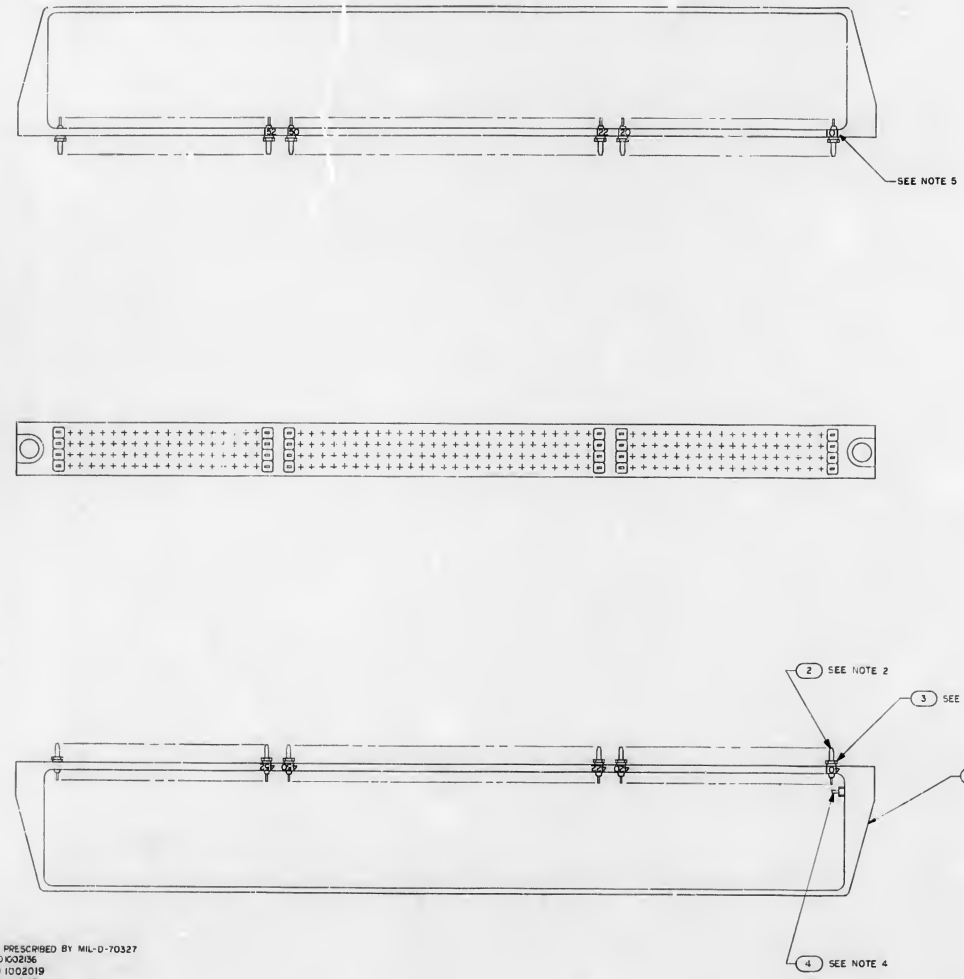

NOTES

1. INTERPRET DRAWING IN ACCORDANCE WITH STANDARDS PRESCRIBED BY MIL-D-70327
2. ASSEMBLE FIND NO 2 AND FIND NO 3 TO FIND NO 1 PER ND 1002136
3. IDENTIFY WITH DRAWING NO. AND REVISION PER ND 1002019
4. MOUNTING TORQUE FOR FIND NO 4 TO BE 15-20 INCH OUNCES
5. MARK .08 / .06 HIGH WHITE CHARACTERS PER ND1002019 AND ND1002122 TYPE II CLASS 2 USING INK PER 1006271-1

QTY REQD	PART OR IDENTIFYING NO.	NOMENCLATURE OR DESCRIPTION	FIND NO.
1	2004039	TERMINAL, THREADED	4
276	1006775	INSULATOR, WRAPOST-MALE, MINATURE	3
276	1001782-1	CONTACT, WRAPOST-MALE, MINATURE	2
1	2004025	HEADER, LOGIC MODULE	1

LIST OF MATERIALS

2003020	
NEXT ASSY	USED ON
APPLICATION	

UNLESS OTHERWISE SPECIFIED DIMENSIONS ARE IN INCHES CAPACITOR VALUES ARE IN µf RESISTOR VALUES ARE IN OHMS TOLERANCES ON FRACTIONS ± DECIMALS ± ANGLES ± DO NOT SCALE THIS DRAWING

MATERIAL

MIT INSTRUMENTATION LAB CAMBRIDGE, MASS.

MANNED SPACECRAFT CENTER HOUSTON, TEXAS

DRAWN
CHECKED
APPROVED
APPROVED
APPROVED MIT
APPROVED NASA

HEADER HOUSING ASSY
LOGIC MODULE

CODE IDENT NO. | SIZE E | DRAWING NO. 2003000

DATE | SCALE 2/1 | SHEET 1 OF 1

SYM	DESCRIPTION	DATE	APPROVAL
	REVISIONS 17215		

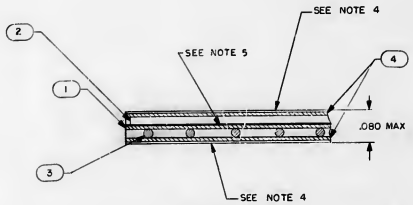

SECTION A-A
SCALE : NONE
POTTING REMOVED
FOR CLARITY

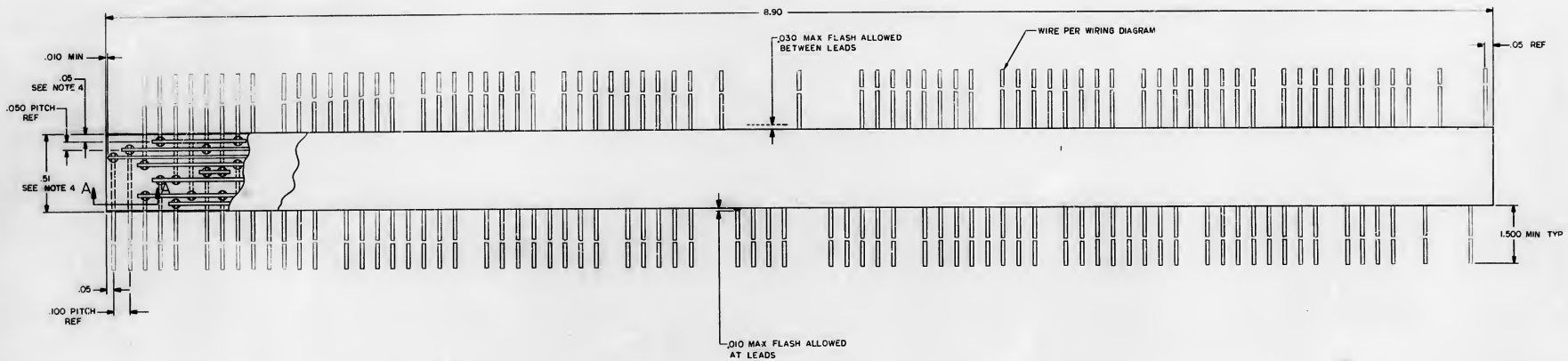

NOTES:
1. INTERPRET DRAWING IN ACCORDANCE WITH STANDARDS PRESCRIBED BY MIL-D-70327
2. AR DENOTES AS REQUIRED
3. WELD PER ND1002005
4. ASSEMBLE PER ND1002260
5. IDENTIFY WITH DRAWING NO. AND REVISION PER ND1002019

QTY REQD	PART OR IDENTIFYING NO.	NOMENCLATURE OR DESCRIPTION	FIND NO.
	2005016	WIRING DIAGRAM	REF
AR	1006335-002	GLASS TAPE	4
AR	1006757-8	WIRE, ELECTRICAL	3
AR	1006757-1	WIRE, ELECTRICAL	2
1	2004008-011	INSULATOR MATRIX	1

-011 LIST OF MATERIALS

2003043	
NEXT ASSY	USED ON
APPLICATION	

UNLESS OTHERWISE SPECIFIED DIMENSIONS ARE IN INCHES
TOLERANCES ON
FRACTIONS ± — DECIMALS ±.01 ANGLES ± —
DO NOT SCALE THIS DRAWING
MATERIAL
HEAT TREATMENT
FINAL FINISH

MIT INSTRUMENTATION LAB CAMBRIDGE, MASS.
DRAWN DATE
CHECKED
APPROVAL
APPROVAL
NASA APPROVAL
MIT APPROVAL

MANNED SPACECRAFT CENTER
HOUSTON TEXAS

MATRIX ASSEMBLY
SENSE AMPLIFIER MODULE

CODE IDENT NO 80230 | SIZE E | NASA DRAWING NO 2003005
SCALE 4/1 | WT | SHEET 1 OF 1

2003005

A REVISED PER TDRR 19685

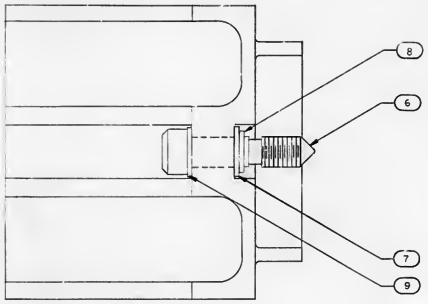

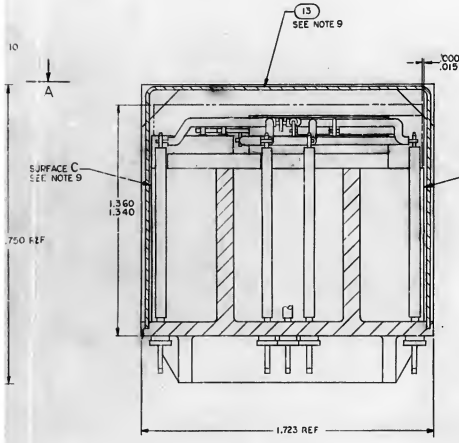

SECTION B-B

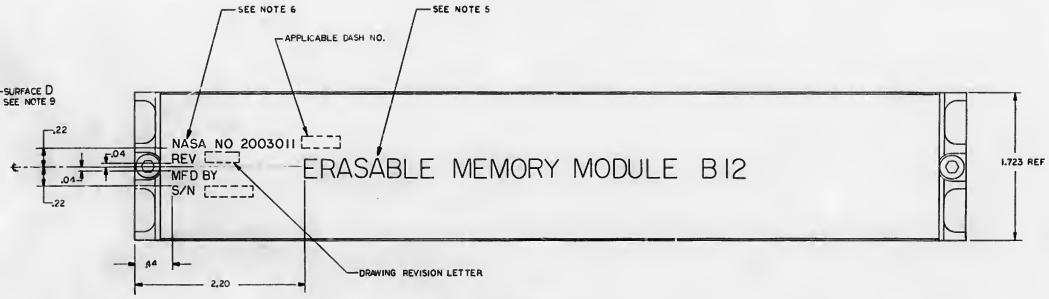

VIEW A-A
SCALE 2/1

PIN 201 REF
PIN 501 REF
PIN 501 REF
PIN 401 REF

QTY REQD	PART OR IDENTIFYING NO	NOMENCLATURE OR DESCRIPTION	FIND NO
	2005006	SCHEMATIC	REF
1	2004083	COVER	13
~~2~~	~~1000083-2~~	~~SCREW, BUTTON-HD~~	~~12~~
AR	1006776-20	INSULATION SLEEVING ELECTRICAL	11
1	2004039	TERMINAL, THREADED	10
2	1004546-1	WASHER FLAT	9
2	MS 16633-4015	RING RETAINING EXTERNAL "E"	8
2	1004546-3	WASHER FLAT	7
2	1004579-1	SCREW JACKING	6
AR	1006776-21	INSULATION SLEEVING	5
AR	1006757-8	WIRE ELECTRICAL	4
~~AR~~	~~1006806-5~~	~~22" LG 2010 F SLOPED TAPE~~	~~3~~
1	2003012-011	DIODE BLOCK ASSY ERASABLE MEMORY	2
1	2003009-011	CORE STACK ASSY ERASABLE MEMORY	1

-C11 LIST OF MATERIALS

UNLESS OTHERWISE SPECIFIED DIMENSIONS ARE IN INCHES
TOLERANCES ON
FRACTIONS ± DECIMALS ±.02 ANGLES ±
DO NOT SCALE THIS DRAWING
MATERIAL
HEAT TREATMENT
FINAL FINISH
NEXT ASSY | USED ON
APPLICATION

MIT INSTRUMENTATION LAB
Cambridge, Mass.
DRAWN | DATE
CHECKED
APPROVAL
APPROVAL
NASA APPROVAL
MIT APPROVAL

MANNED SPACECRAFT CENTER
HOUSTON, TEXAS

ERASABLE MEMORY
B 12
ASSEMBLY

CODE IDENT NO 80230 | SIZE J | NASA DRAWING NO 2003011
SCALE 2/1 | WT | SHEET 1 OF 1

2003011

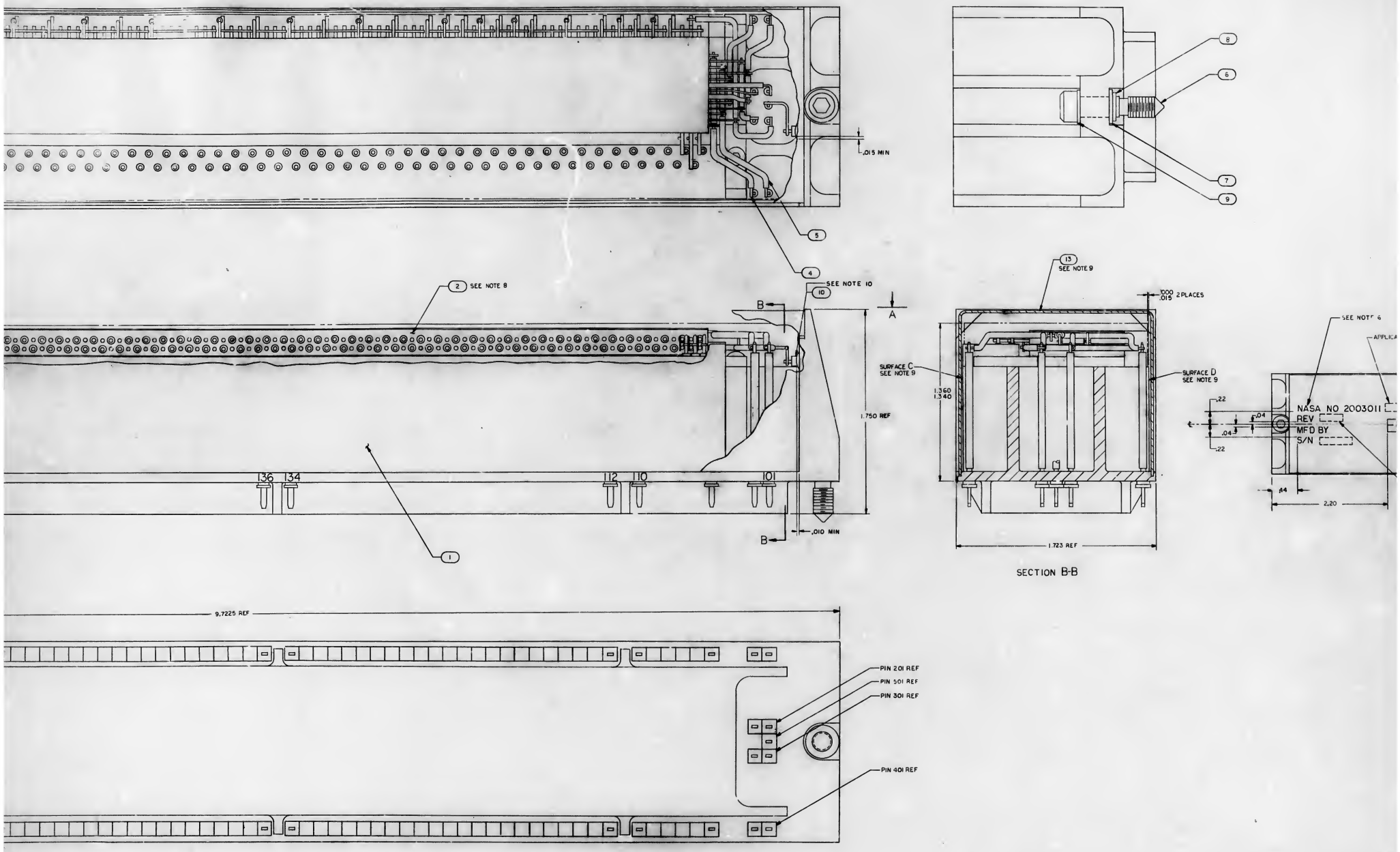
.015 MIN
SEE NOTE 10
SEE NOTE 8
1.750 REF
.010 MIN
136
134
112
110
101
9.7225 REF
PIN 201 REF
PIN 501 REF
PIN 301 REF
PIN 401 REF
SEE NOTE 9
.000
.015
2 PLACES
SURFACE C
SEE NOTE 9
SURFACE D
SEE NOTE 9
1.360
1.340
1.723 REF
SECTION B-B
SEE NOTE 6
APPLICA
NASA NO 2003011
REV
MFD BY
S/N
.22
.04
.04
.22
.84
2.20

2003011

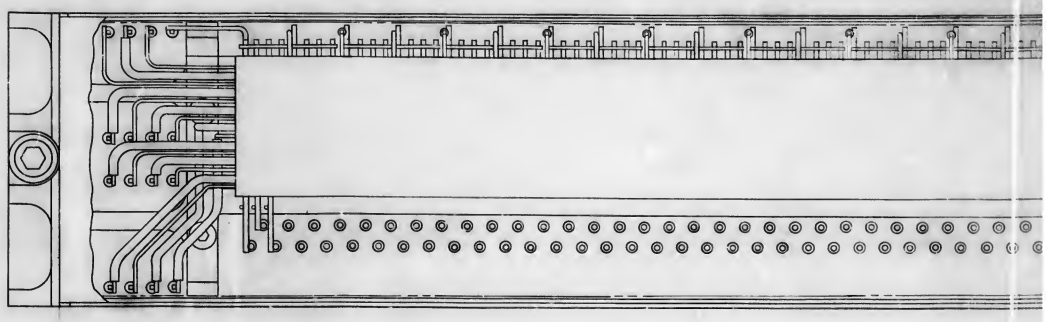

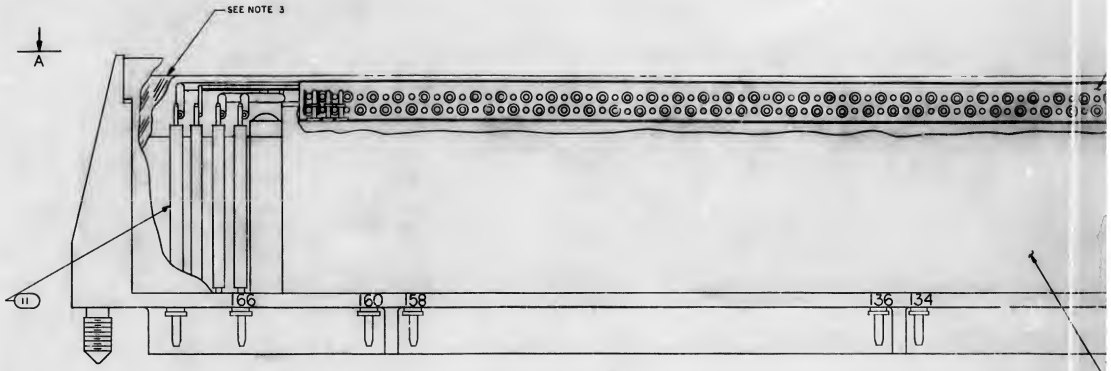

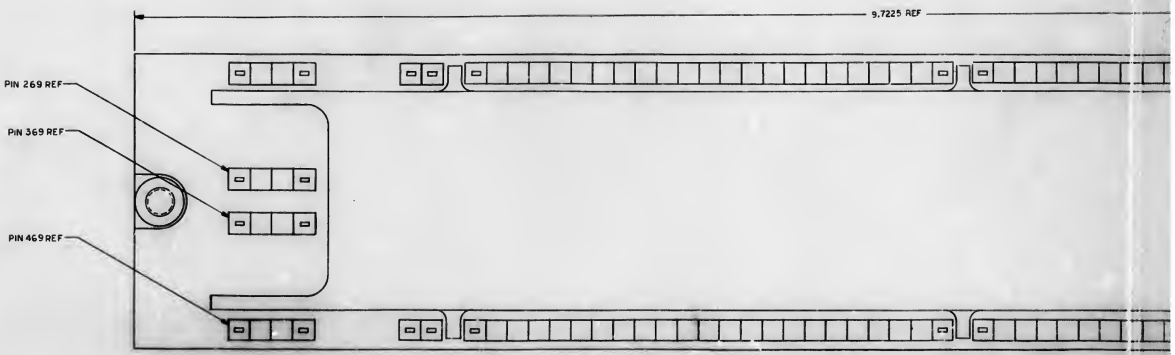

NOTES:

1. INTERPRET DRAWING IN ACCORDANCE WITH STANDARDS PRESCRIBED BY MIL-D-70327
2. WELD PER ND1002005
3. ENCAPSULATE PER ND1002009, METHOD F
4. AR DENOTES AS REQUIRED
5. MARK .26/.24 HIGH WHITE CHARACTERS PER ND1002019 AND ND1002022 TYPE II CLASS 2 USING MARKING INK 1006271-1
6. MARK .10/.08 HIGH WHITE CHARACTERS PER ND1002019 AND ND1002022 TYPE II CLASS 2 AND SERIALIZE PER ND1002023 USING MARKING INK 1006271-1
7. UNLESS OTHERWISE SPECIFIED ALL WIRING SHALL BE IN ACCORDANCE WITH ND1002069
8. SEAL FIND NO. 2 AT ALL MATING SURFACES PER ND1002004, TYPE XI
9. BOND FIND NO. 13 TO FIND NO. 1 ALONG GROOVES & TO SURFACES C & D PER ND1002004, TYPE XI
10. SEAL FIND NO. 10 TO FIND NO. 1 PER ND1002004, TYPE XI
11. MOUNTING TORQUE FOR FIND NO. 10 TO BE 15 TO 20 INCH OUNCES

2003011

REVISIONS

REV	DESCRIPTION	DATE	APPROVAL

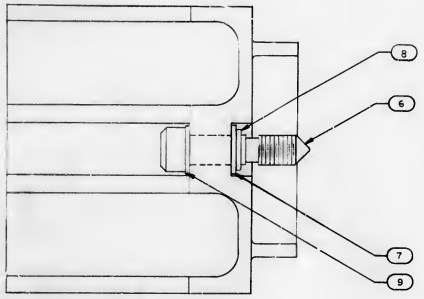

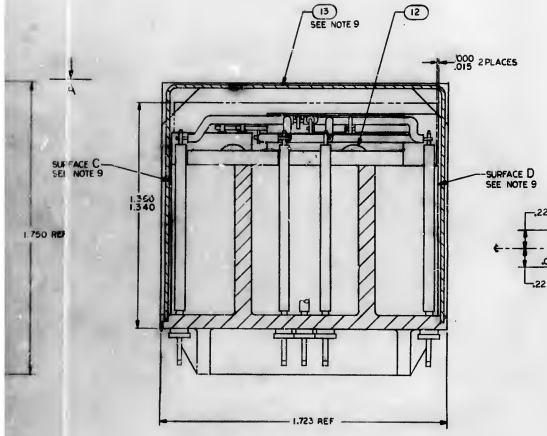

SECTION B-B

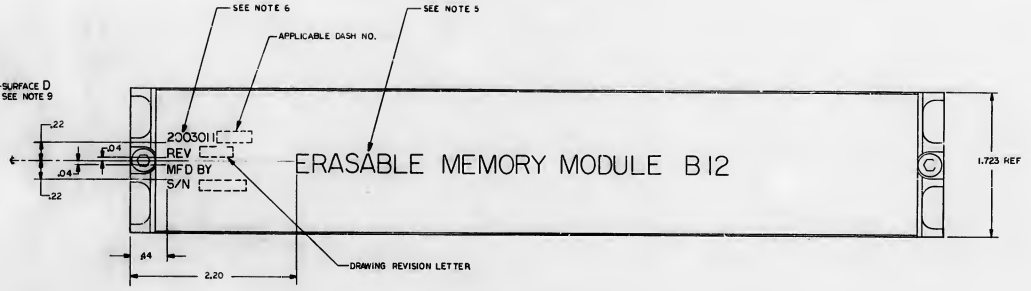

VIEW A-A
SCALE 2/1

PIN 201 REF
PIN 501 REF
PIN 301 REF
PIN 401 REF

QTY REQD	PART OR IDENTIFYING NO	NOMENCLATURE OR DESCRIPTION	FIND NO
	2005006	SCHEMATIC	REF
1	2004083	COVER	13
2	1000093-2	SCREW, BUTTON HD	12
AR	1006776-20	INSULATION SLEEVING ELECTRICAL	11
1	2004039	TERMINAL, THREADED	10
2	1004545-1	WASHER FLAT	9
2	MS 16633-401S	RING RETAINING EXTERNAL "E"	8
2	1004546-3	WASHER FLAT	7
2	1004579-1	SCREW JACKING	6
AR	1006776-21	INSULATION SLEEVING	5
AR	1006757-8	WIRE, ELECTRICAL	4
AR	1006806-5	.225 LG DOUBLE SIDED TAPE	3
1	2003012-011	DIODE BLOCK ASSY ERASABLE MEMORY	2
1	2003009-011	CORE STACK ASSY ERASABLE MEMORY	1

C11 LIST OF MATERIALS

UNLESS OTHERWISE SPECIFIED DIMENSIONS ARE IN INCHES
TOLERANCES ON
FRACTIONS ± DECIMALS X.XX±.005 X.XXX±.002 ANGLES ±
DO NOT SCALE THIS DRAWING
MATERIAL
HEAT TREATMENT
FINAL FINISH
NEXT ASSY | USED ON
APPLICATION

NEY INSTRUMENTATION LAB CAMBRIDGE MASS

DRAWING | CHECKED | APPROVAL | APPROVAL | NASA APPROVAL | NYT APPROVAL

MANNED SPACECRAFT CENTER
HOUSTON, TEXAS

ERASABLE MEMORY
B 12
ASSEMBLY

CODE IDENT NO 80230 | SIZE J | NASA DRAWING NO 2003011

2003011

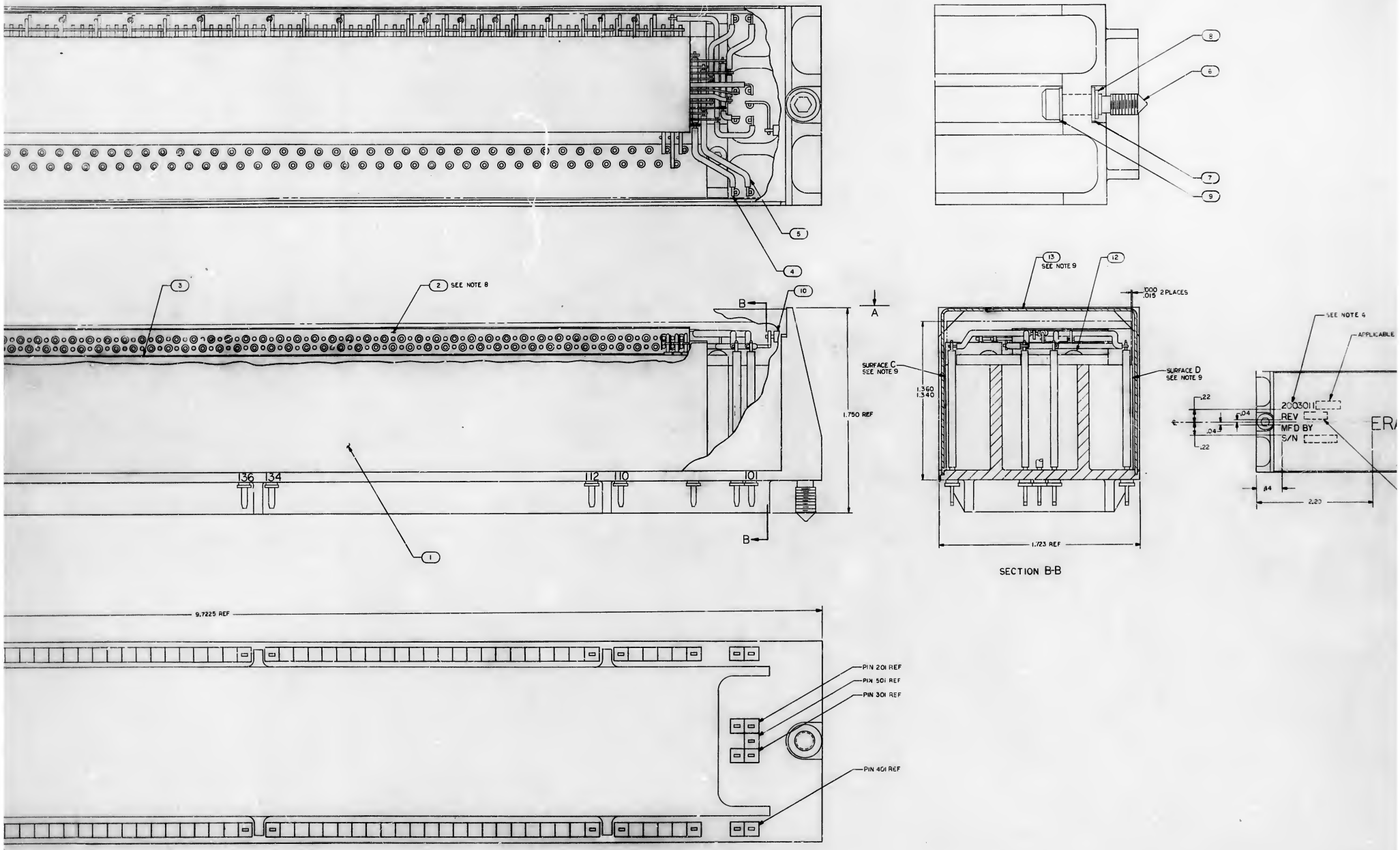
1
2
SEE NOTE 8
3
4
5
6
7
8
9
10
12
13
SEE NOTE 9
B
A
1.750 REF
136
134
112
110
101
SURFACE C
SEE NOTE 9
SURFACE D
SEE NOTE 9
1.360
1.340
.000
.015
2 PLACES
1.723 REF
SECTION B-B
SEE NOTE 6
APPLICABLE
2003011
REV
MFD BY
S/N
.22
.04
.84
2.20
9.7225 REF
PIN 201 REF
PIN 501 REF
PIN 301 REF
PIN 401 REF

2003011

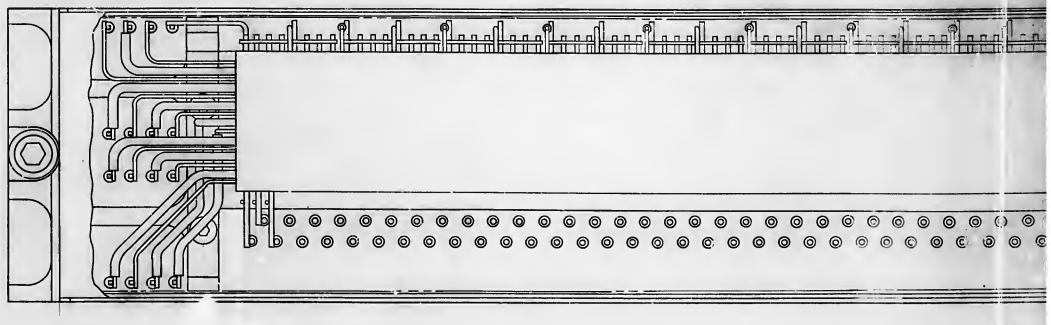

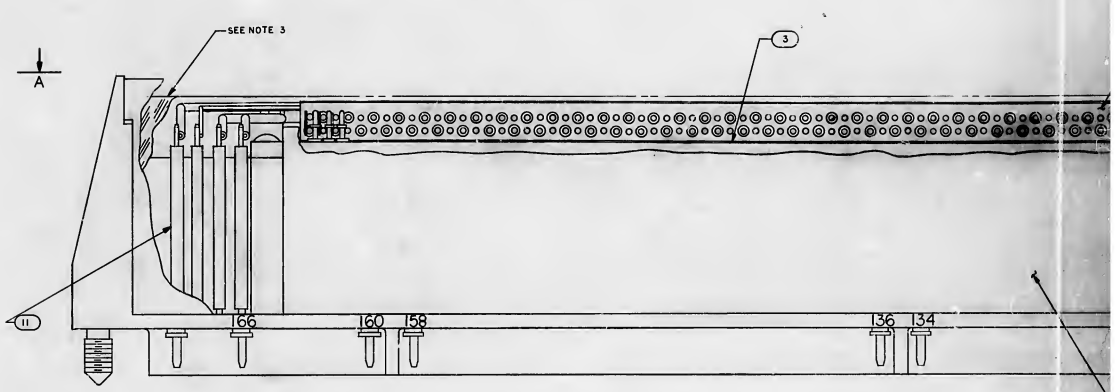

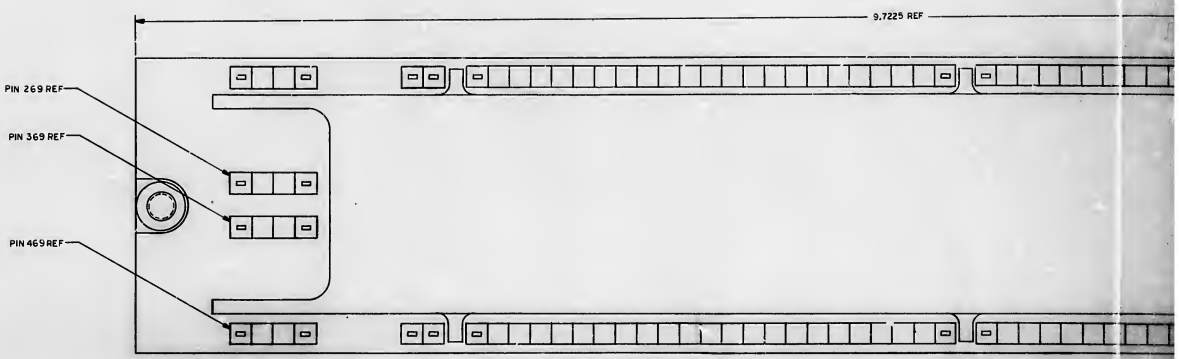

NOTES:

1. INTERPRET DRAWING IN ACCORDANCE WITH STANDARDS PRESCRIBED BY MIL-D-70327
2. WELD PER ND1002005
3. ENCAPSULATE PER ND1002009, METHOD F
4. AR DENOTES AS REQUIRED
5. MARK .25/.24 HIGH WHITE CHARACTERS PER ND1002019 AND ND1002022 TYPE II CLASS 2 USING MARKING INK PER 1006271-1
6. MARK .10/.06 HIGH WHITE CHARACTERS PER ND1002019 AND ND1002022 TYPE II CLASS 2 AND SERIALIZE PER ND1002023 USING MARKING INK PER 1006271-1
7. UNLESS OTHERWISE SPECIFIED ALL WIRING SHALL BE IN ACCORDANCE WITH ND1002069
8. BOND FIND NO. 2 AT ALL MATING SURFACES PER ND1002004, TYPE IV
9. BOND FIND NO. 13 TO FIND NO. 1 ALONG GROOVES & TO SURFACES C & D PER ND1002004, TYPE VI

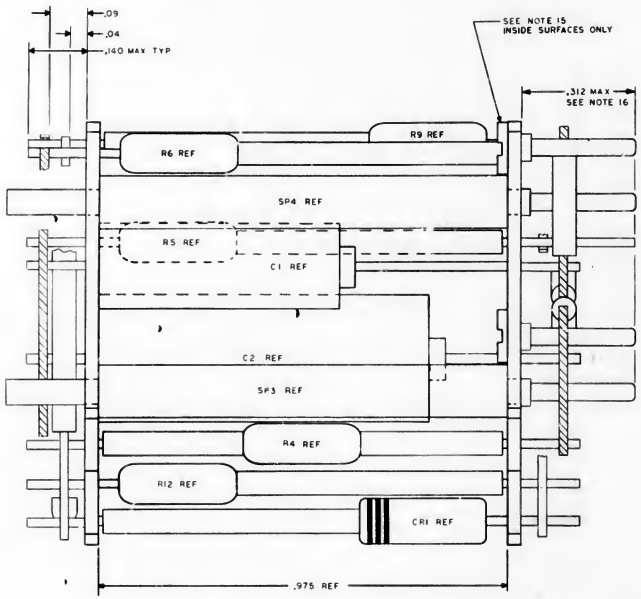

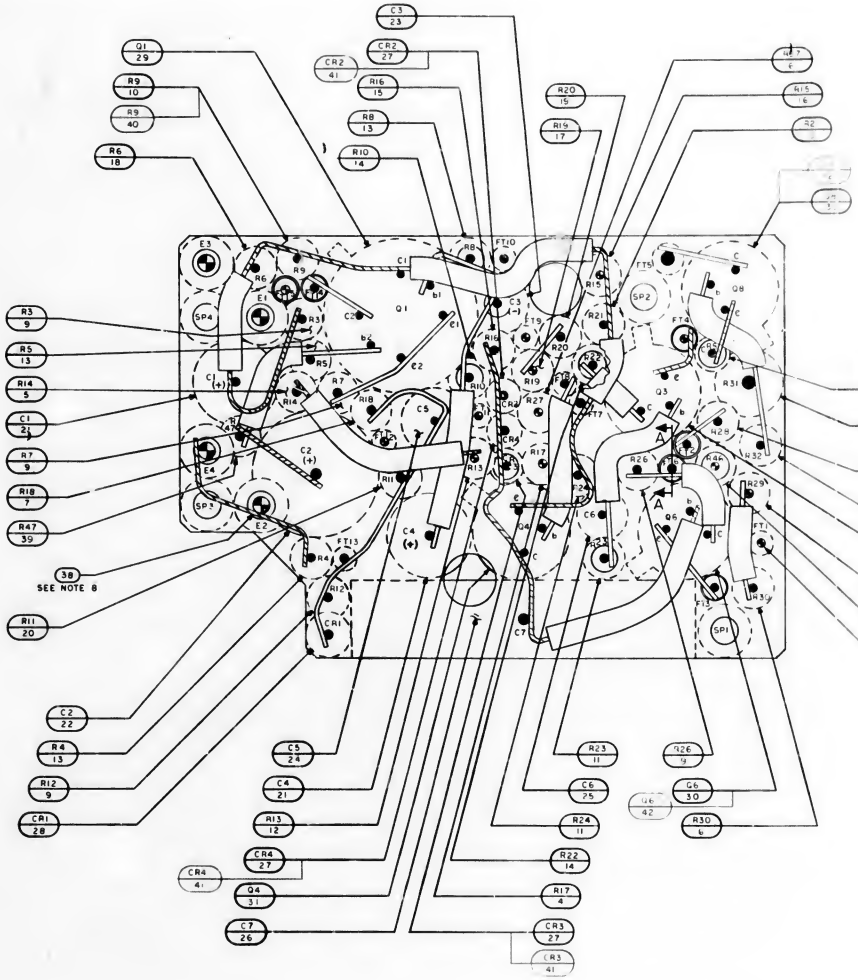

NOTES:

1. INTERPRET DRAWING IN ACCORDANCE WITH STANDARDS PRESCRIBED BY MIL-D-70327
2. AR DENOTES AS REQUIRED
3. FT DENOTES FEED THRU
4. WELD PER ND1002005
5. UNLESS OTHERWISE SPECIFIED ALL WIRING SHALL BE IN ACCORDANCE WITH ND1002069
6. BOND FIND NO.3 TO FIND NO.1 AND 2 PER ND1002004 TYPE V
7. BOND C1, C2, Q2, Q5, AND Q7 TO FIND NO.2 PER ND1002004 TYPE V
8. BOND E1, E2, E3, E4, Q1, Q3, Q4, Q6, AND Q8 TO FIND NO.1 PER ND1002004 TYPE V
9. LOCATE R9, R13, R14, R16, R17, R18, R23, R28, R29, R47, CR1 AND CR5 TO THIS DIMENSION
10. LOCATE R5, R6, R7, R11, R12, R24, R31, R32, C3, C6 AND CR3 TO THIS DIMENSION
11. TYP SLEEVING FOR FIND NO.4 THRU FIND NO.20 FIND NUMBERS 23, 25, 27, 28, 39, 40, AND 41
12. TYP FOR FT1 THRU FT4, FT6 THRU FT14
13. TYP THRU FIND NO. 2 FOR FT3, FT6, R23, R46 AND CR3
14. TYP THRU FIND NO. 1 FOR FT2, FT3, FT4, FT6, FT14, FT15, R8, R10, R22, R23, R46, CR3, CR5, AND C3
15. COAT INDICATED SURFACES OF E1, E2, E3, E4, Q1 AND Q8 WITH CLEAR EPOXY PER ND1002064 TYPE D SEMI-RIGID
16. DENOTES LEADS TO BE CUT TO DIMENSION SHOWN
17. BLACK DOT LEADS TO BE CUT TO DIMENSION SHOWN
18. + DENOTES POSITIVE SIDE OF CAPACITOR
19. CLEAR WIRING INDICATES LOWER LEVEL WIRING
20. CROSS HATCHED WIRING INDICATES UPPER LEVEL WIRING
21. K DENOTES CATHODE SIDE OF DIODE
22. IDENTIFY WITH PART NO PER ND1002019

2003029 H

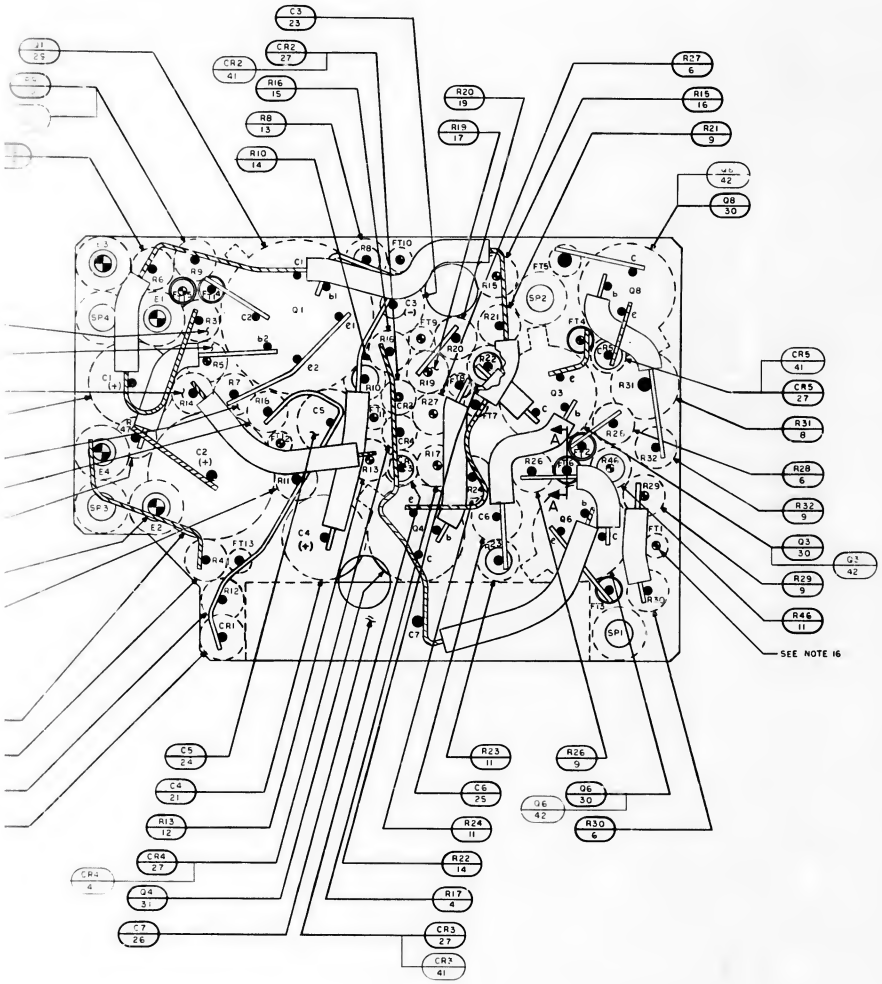

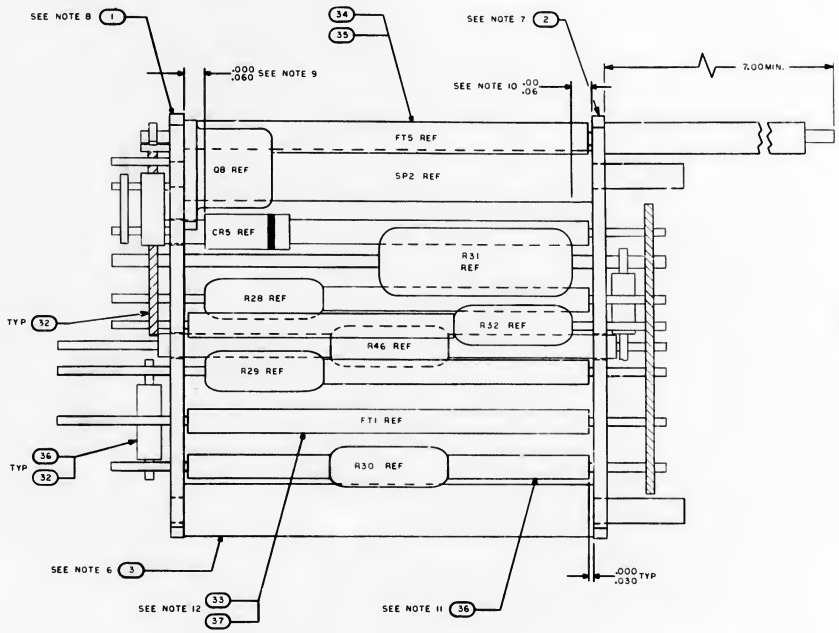

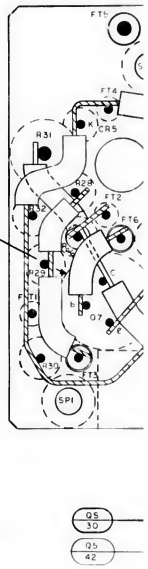

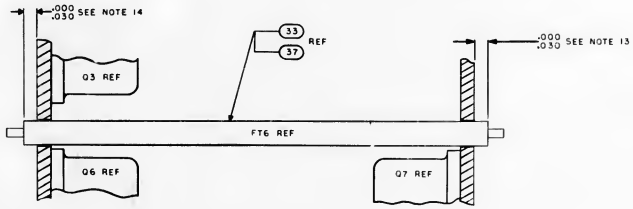

SECTION A-A

2003029 H

REV	ZONE	DESCRIPTION	BY	CHK	DATE	APPROVED
A		REVISED PER TDRR 20951				
B		REVISED PER TDRR 22264				
C		REVISED PER TDRR 22544				
D		REVISED PER TDRR 24192				
E		REVISED PER TDRR 25487				
F		REVISED PER TDRR 26148				
G		REVISED PER TDRR 32561				
H		REVISED PER TDRR 37424				

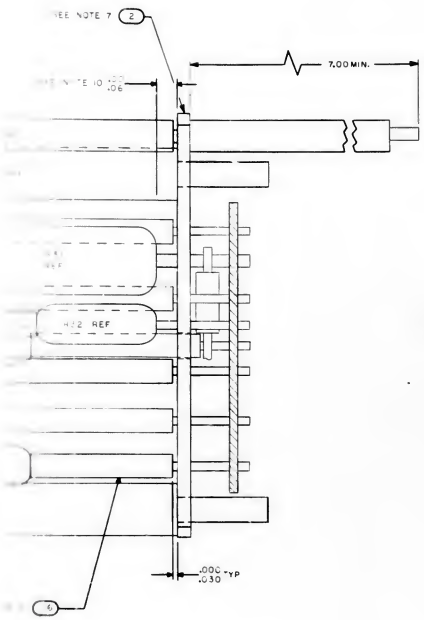

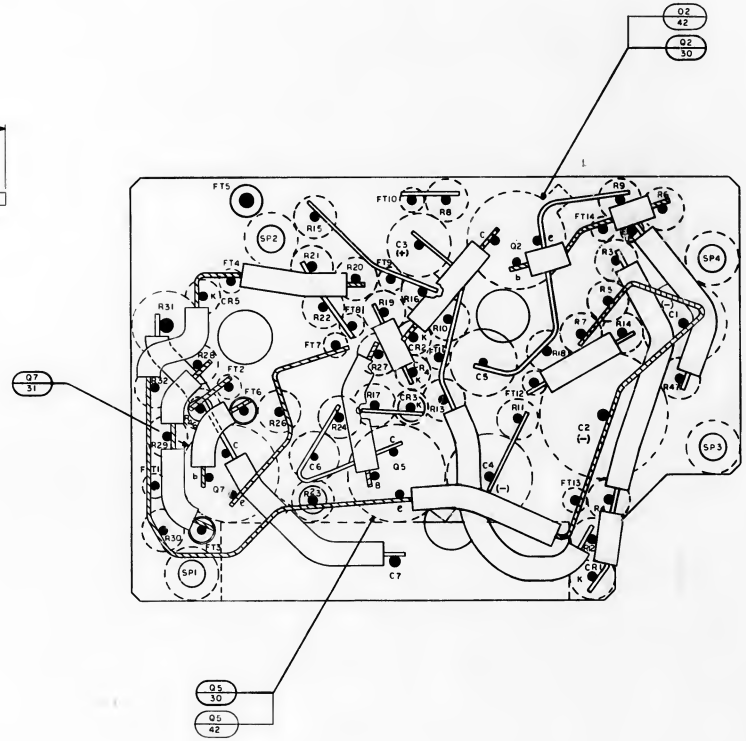

QTY REQD	QTY REQD	QTY REQD	PART OR IDENTIFYING NO	NOMENCLATURE OR DESCRIPTION	FIND NO
			2005936	SCHEMATIC	REF
			2005916	SCHEMATIC	REF
			2005010	SCHEMATIC	REF
5			2004184-002	TRANSISTOR UNPOTTED	42
4			2004183-001	DIODE	41
1	1		1006750-25	RESISTOR	40
1	1	1	1006750-56	RESISTOR	39
4	4	4	2004154	TERMINAL	38
AR	AR	AR	1006776-22	INSULATION, SLEEVING	37
AR	AR	AR	1006776-21	INSULATION, SLEEVING	36
AR	AR	AR	1006776-20	INSULATION, SLEEVING	35
AR	AR	AR	1006757-9	WIRE, ELECTRICAL	34
AR	AR	AR	1006757-8	WIRE, ELECTRICAL	33
AR	AR	AR	1006757-1	WIRE, ELECTRICAL	32
2	2	2	2004004-004	TRANSISTOR, UNPOTTED	31
	5	5	2004004-003	TRANSISTOR, UNPOTTED	30
1	1	1	1010376-3	TRANSISTOR	29
1	1	1	2004112-002	DIODE	28
	4	4	2004103-001	DIODE	27
1	1	1	1006793-30	CAPACITOR	26
1	1	1	1006777-28	CAPACITOR	25
1	1	1	1006777-31	CAPACITOR	24
1	1	1	1006755-57	CAPACITOR	23
1	1	1	1006755-14	CAPACITOR	22
2	2	2	1006755-79	CAPACITOR	21
1	1	1	1006788-10	RESISTOR	20
1	1	1	1006750-145	RESISTOR	19
1	1	1	1006750-141	RESISTOR	18
1	1	1	1006750-65	RESISTOR	17
1	1	1	1006750-64	RESISTOR	16
1	1	1	1006750-54	RESISTOR	15
2	2	2	1006750-43	RESISTOR	14
3	3	3	1006750-39	RESISTOR	13
1	1	1	1006750-36	RESISTOR	12
3	3	3	1006750-32	RESISTOR	11
—	—	1	1006750-28	RESISTOR	10
7	7	7	1006750-24	RESISTOR	9
1	1	1	1006760-22	RESISTOR	8
1	1	1	1006750-16	RESISTOR	7
3	3	3	1006750-15	RESISTOR	6
1	1	1	1006750-1	RESISTOR	5
1	1	1	1006750-8	RESISTOR	4
4	4	4	2004054	SPACER	3
1	1	1	2004059	WIRING BOARD, BOTTOM	2
1	1	1	2004058	WIRING BOARD, TOP	1

-031-021-011 LIST OF MATERIALS

2003987	
2003953	
2003056	
NEXT ASSY	USED ON
APPLICATION	

UNLESS OTHERWISE SPECIFIED DIMENSIONS ARE IN INCHES CAPACITOR VALUES ARE IN μf RESISTOR VALUES ARE IN OHMS TOLERANCES ON FRACTIONS DECIMALS ANGLES ± — XX ±.01 ± —
DO NOT SCALE THIS DRAWING
MATERIAL

MIT INSTRUMENTATION LAB CAMBRIDGE MASS

DRAWN
CHECKED
APPROVED
APPROVED
APPROVED MIT
APPROVED MSC
DATE

MANNED SPACECRAFT CENTER HOUSTON TEXAS

AGC POWER SUPPLY CONTROL CIRCUIT SUB-ASSY

CODE IDENT NO 80230 | SIZE J | DRAWING NO 2003029

SCALE 10/1 | SHEET 1 OF 1

2003029 H

SYM	ZONE	DESCRIPTION	BY	CHK	DATE	APPROVED

REVISIONS

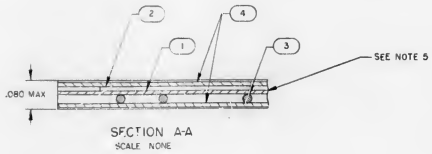

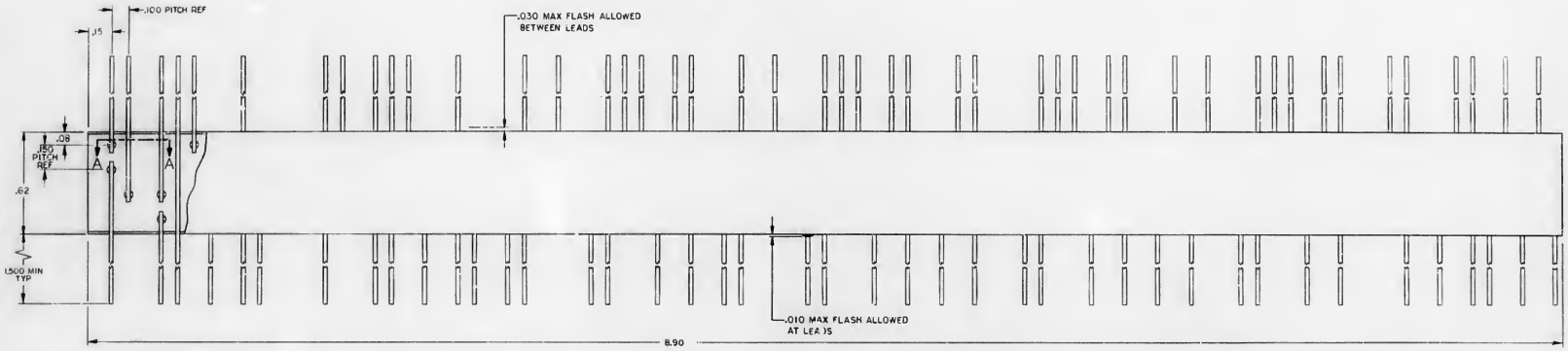

NOTES:
1. INTERPRET DRAWING IN ACCORDANCE WITH STANDARDS PRESCRIBED BY MIL-D-70327
2. AR DENOTES AS REQUIRED
3. WELD PER NO 1002005
4. ASSEMBLE PER NC
5. APPLY FIND NO. 5 BEFORE ASSEMBLY OF FIND NO. 2
6. IDENTIFY WITH DRAWING NO. AND REVISION PER NO 1002019

QTY REQD	PART OR IDENTIFYING NO	NOMENCLATURE OR DESCRIPTION	FIND NO
	2003013	WIRING DIAGRAM	REF
AR	1006318	ADHESIVE	5
AR	1006335	GLASS TAPE	4
AR	1006757-8	WIRE, ELECTRICAL	3
AR	1003757-1	WIRE, ELECTRICAL	2
1	2004077	INSULATOR, MATRIX	1

LIST OF MATERIALS

2003026	
NEXT ASSY	USED ON
APPLICATION	

UNLESS OTHERWISE SPECIFIED DIMENSIONS ARE IN INCHES
CAPACITOR VALUES ARE IN μf
RESISTOR VALUES ARE IN OHMS
TOLERANCES ON
FRACTIONS ± DECIMALS ± ANGLES ±
DO NOT SCALE THIS DRAWING

MATERIAL

MIT INSTRUMENTATION LAB CAMBRIDGE, MASS

MANNED SPACECRAFT CENTER HOUSTON, TEXAS

DRAWN 3/4/65
CHECKED
APPROVED
APPROVED

MATRIX ASSEMBLY
CURRENT SWITCH MODULE

APPROVED MIT
APPROVED NASA

DATE

CODE IDENT NO

SIZE E

DRAWING NO 2003031

SCALE 4/1

SHEET 1 OF 1

REVISIONS 20405					
REV	ZONE	DESCRIPTION	DR	CHK	DATE	APPROVED
A		REVISED PER TDRR 20865				
B		REVISED PER TDRR 21855				

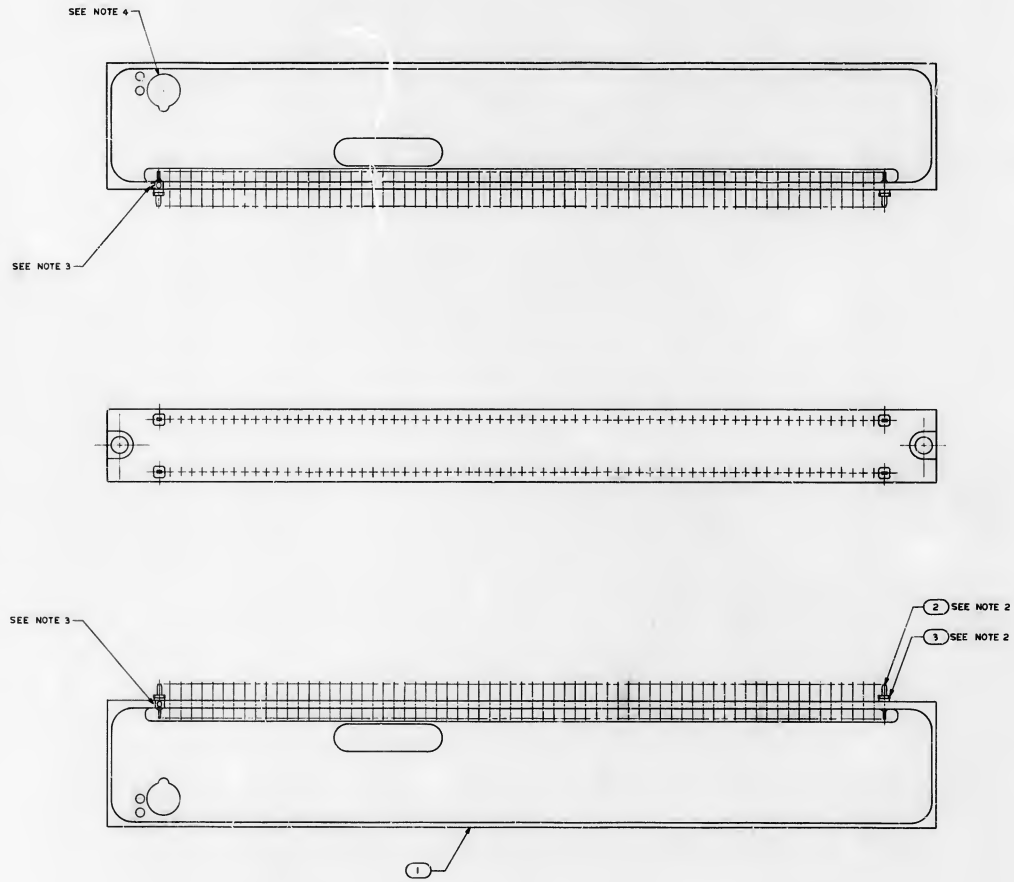

NOTES:

1. INTERPRET DRAWING IN ACCORDANCE WITH STANDARDS PRESCRIBED BY MIL-D-70327
2. ASSEMBLE FIND NO.2 AND FIND NO.3 TO FIND NO.1 PER ND 1002136
3. MARK .08/.06 HIGH WHITE CHARACTERS PER ND 1002019 AND ND 1002122, TYPE II CLASS 2. CENTRALIZE AS SHOWN
4. PARTIAL HOLE PATTERN SHOWN FOR ORIENTATION PURPOSES ONLY
5. IDENTIFY WITH DRAWING NO. AND REVISION PER ND 1002019

QTY REQD	PART OR IDENTIFYING NO.	NOMENCLATURE OR DESCRIPTION	FIND NO.
138	1006775	INSULATOR, WRAPOST – MALE, MINAT	3
138	[illegible]-1	CONTACT, WRAPOST – MALE, MINAT	2
1	2004146	HEADER HOUSING	1

-011

LIST OF MATERIALS

2003069	
NEXT ASSY	USED ON
APPLICATION	

UNLESS OTHERWISE SPECIFIED DIMENSIONS ARE IN INCHES
CAPACITOR VALUES ARE IN μf
RESISTOR VALUES ARE IN OHMS
TOLERANCES ON
FRACTIONS ± DECIMALS ± ANGLES ±
DO NOT SCALE THIS DRAWING
MATERIAL

MIT INSTRUMENTATION LAB
CAMBRIDGE, MASS.

MANNED SPACECRAFT CENTER
HOUSTON, TEXAS

DRAWN
CHECKED
APPROVED
APPROVED
APPROVED MIT
APPROVED NASA
DATE

HEADER HOUSING ASSY, ALARM MODULE

CODE IDENT NO. 80230 | SIZE E | DRAWING NO. 2003032

SCALE 2/1 | SHEET 1 OF 1

REVISIONS

SYM	SCY B	DESCRIPTION	DR	CHK	DATE	APPROVED

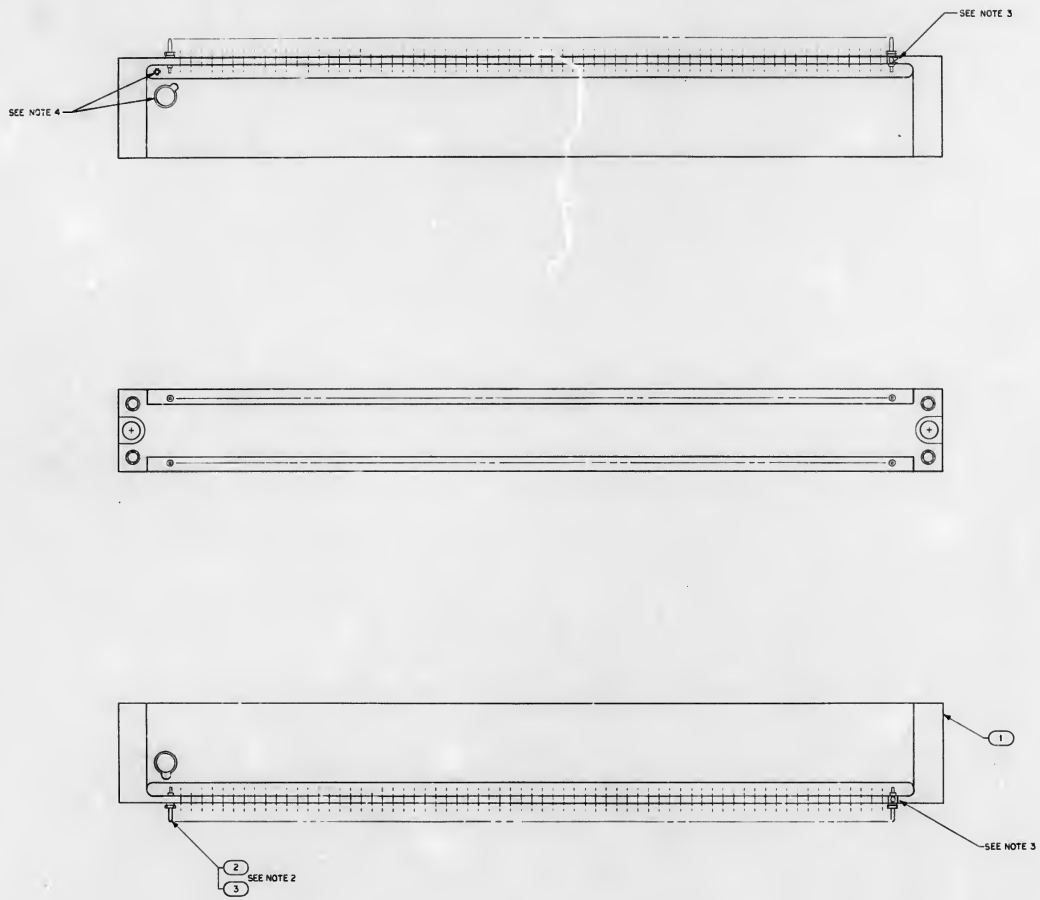

NOTES

1. INTERPRET DRAWING IN ACCORDANCE WITH STANDARDS PRESCRIBED BY MIL-D-70327
2. ASSEMBLE FIND NO. 2 AND FIND NO. 3 TO FIND NO. 1 PER ND1002136
3. MARK .08 /.06 HIGH WHITE CHARACTERS PER ND1002019 AND ND 1002122 TYPE II CL SS 2 USING INK 1006271-1
4. PARTIAL HOLE PATTERN SHOWN FOR ORIENTATION PURPOSES ONLY
5. IDENTIFY WITH DRAWING NO. AND REVISION PER ND1002019

LIST OF MATERIALS

QTY REQD	PART OR IDENTIFYING NO.	NOMENCLATURE OR DESCRIPTION	FIND NO.
138	1006775	INSULATOR, WRAPOST-MALE, MINAT	3
138	1006782-1	CONTACT, WRAPOST-MALE, MINAT	2
1	2004020	HEADER, HOUSING	1

-011

NEXT ASSY	USED ON
2003026	

APPLICATION

UNLESS OTHERWISE SPECIFIED
DIMENSIONS ARE IN INCHES
CAPACITOR VALUES ARE IN μf
RESISTOR VALUES ARE IN OHMS
TOLERANCES ON
FRACTIONS DECIMALS ANGLES
± — ± — ±
DO NOT SCALE THIS DRAWING

MATERIAL

MIT INSTRUMENTATION LAB
CAMBRIDGE, MASS.

MANNED SPACECRAFT CENTER
HOUSTON, TEXAS

DRAWN T. Jones
CHECKED T. Jones
APPROVED
APPROVED

HEADER HOUSING ASSY
CURRENT SWITCH MODULE

APPROVED MIT
APPROVED MSC
DATE

CODE IDENT NO
SIZE E
DRAWING NO. 2003033
SCALE 2/1
SHEET OF 1

2003033

REVISIONS					
SYM	ZONE	DESCRIPTION	BY	CHK	DATE	APPROVED
A		REVISED PER TDRR 19684	WM			
B		REVISED PER TDRR 23218	RCH			
C		REVISED PER TDRR 24218	RCT			
D		REVISED PER TDRR 25149	AJG			
E		REVISED PER TDRR 25930				

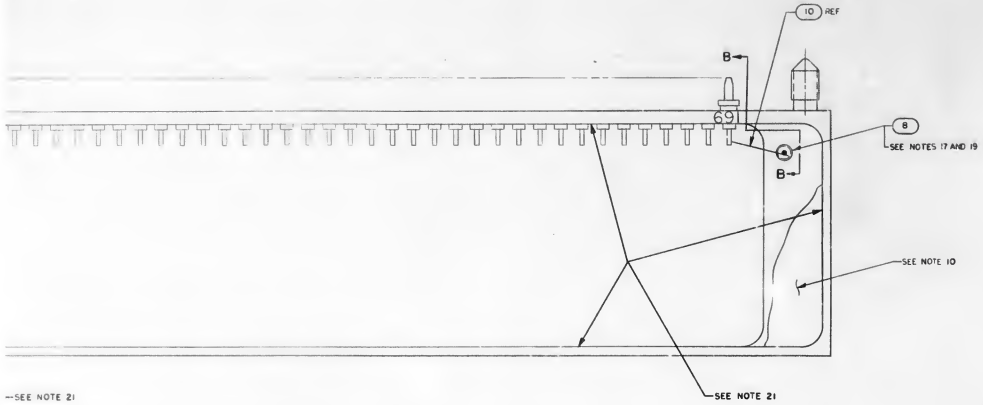

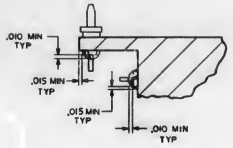

PARTIAL SECTION B-B
SEE NOTE 15

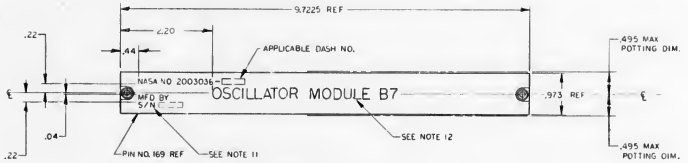

MARKING VIEW
SCALE 1/1

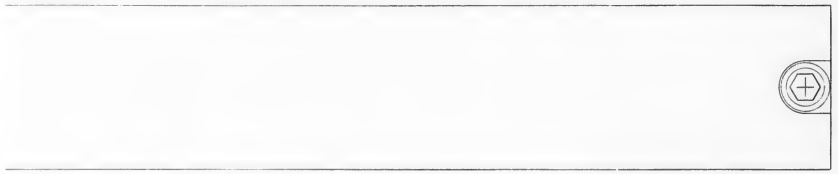

R2, R3, R4, R6, R7, R8, R9 AND R10							
PART NO.		VALUE	PART NO.		VALUE	PART NO.		VALUE
1010733-121		511	1010733-313		5110	1010733-490		42700
	-125	536		-317	5360		-494	44800
	-128	556		-320	5560		-497	46400
	-133	590		-323	5760		-499	47500
	-136	612		-325	5900		-501	48700
	-141	649		-328	6120		-503	49900
	-144	673		-330	6260		-505	51100
	-149	715		-333	6490		-507	52300
	-153	750		-336	6730		-509	53600
	-156	777		-341	7150		-512	55600
	-160	816		-345	7500		-515	57600
	-165	866		-348	7770		-517	59000
	-169	909		-352	8160		-520	61200
	-173	953		-355	8450		-522	62600
	-176	988		-357	8660		-525	64900
	-178	1010		-361	9090		-528	67300
	-181	1050		-365	9530		-530	69000
	-185	1100		-368	9880		-533	71500
	-189	1150		-370	10100		-535	73200
	-192	1200		-373	10500		-537	75000
	-195	1240		-377	11000		-540	77700
	-199	1300		-381	11500		-542	79600
	-204	1380		-384	12000		-544	81600
	-209	1470		-387	12400		-546	83500
	-213	1540		-391	13000		-549	86600
	-216	1600		-396	13800		-551	88700
	-221	1690		-401	14700		-553	90900
	-225	1780		-405	15400		-555	93100
	-230	1890		-408	16000		-557	95300
	-234	1980		-413	16900		-560	98800
	-239	2100		-417	17800		-562	101000
	-243	2210		-420	18400		-565	105000
	-246	2290		-422	18900		-569	110000
	-250	2400		-426	19800		-573	115000
	-254	2520		-428	20300		-576	120000
	-259	2670		-431	21000		-579	124000
	-264	2840		-435	22100		-583	130000
	-269	3010		-438	22900		-588	138000
	-273	3160		-442	24000		-593	147000
	-277	3320		-446	25200		-597	154000
	-280	3440		-451	26700	1010733-600		160000
	-284	3610		-456	28400			
	-287	3740		-461	30100			
	-291	3920		-465	31600			
	-295	4120		-469	33200			
	-298	4270		-472	34400			
	-302	4480		-476	36100			
	-305	4640		-479	37400			
	-308	4810		-483	39200			
1010733-310		4930	1010733-487		41200			

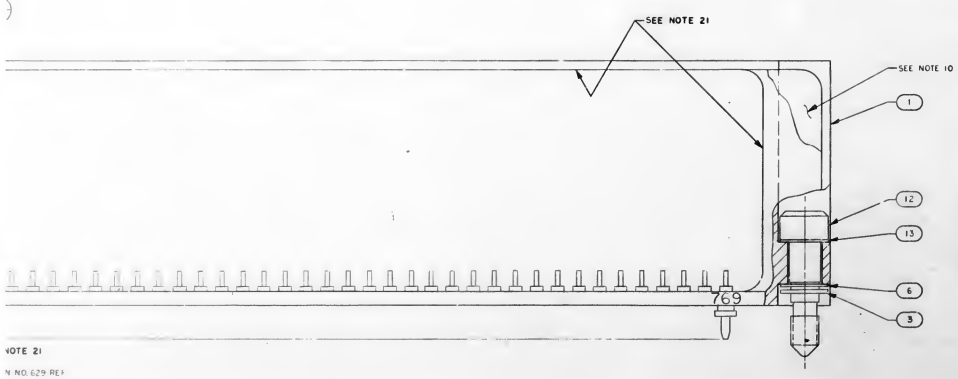

NOTE 21
N NO. 629 REF

	2005003	SCHEMATIC	REF
2	NAS620C-4L	WASHER, FLAT	16
8	NAS620C-2	WASHER, FLAT	15
8	SEE NOTE 13	RESISTOR	14
2	1004546-1	WASHER, FLAT	13
2	1004579-1	SCREW, JACKING	12
AR	1006776-22	INSULATION, SLEEVING	11
AR	1006757-8	WIRE, ELECTRICAL	10
2	1006783-18	SCREW, BUTTON HEAD	9
1	2004039	TERMINAL, THREADED	8
8	1006763-9	SCREW, BUTTON HEAD	7
2	1004546-3	WASHER, FLAT	6
1	2004062	COVER B	5
1	2004061	COVER A	4
2	MS16653-4015	RING, RETAINING	3
1	2003035-011	OSCILLATOR SUBASSEMBLY	2
1	2003037-011	HEADER HOUSING ASSEMBLY	1
QTY REQD	PART OR IDENTIFYING NO.	NOMENCLATURE OR DESCRIPTION	REF NO.

-011 LIST OF MATERIALS

MIT INSTRUMENTATION LAB
CAMBRIDGE, MASS

MANNED SPACECRAFT CENTER
HOUSTON, TEXAS

OSCILLATOR MODULE B7 ASSEMBLY

DRAWN E.W. 3/5/68
CHECKED
APPROVED
APPROVED
APPROVED MIT
APPROVED MSC

CODE IDENT NO. 80230
SIZE J
DRAWING NO. 2003036
SCALE 4/1
SHEET 1 OF 1

2003100
NEXT ASSY
USED ON
APPLICATION

UNLESS OTHERWISE SPECIFIED DIMENSIONS ARE IN INCHES
CAPACITOR VALUES ARE IN μf
RESISTOR VALUES ARE IN OHMS
TOLERANCES ON
FRACTIONS DECIMALS ANGLES
± ±.02 ±
DO NOT SCALE THIS DRAWING
MATERIAL

2003036 D

R2	
PART NO.	VALUE
1006750-39	2.0K
-124	2.3K
-125	2.55K
-42	2.7K
-43	3K
-44	3.3K
-45	3.6K
-46	3.9K
-47	4.3K
-48	4.7K
-49	5.1K
-50	5.6K
-51	6.2K
-52	6.8K
-136	7.15K
-53	7.5K
-137	7.85K
-54	8.2K
-138	8.65K
-55	9.1K
-139	9.55K
-56	10K
-140	10.5K
-57	11K
-141	11.5K
-58	12K
-142	12.5K
-59	13K
-143	14K
-60	15K
-144	15.5K
-61	16K
-145	17K
-62	18K
-146	19K
-63	20K
-147	21K
1006750-64	22K
SEE NOTE 14	∞

R4 AND R6			
PART NO.	VALUE	PART NO.	VALUE
1006750-25	510	1006750-126	2.85K
-109	535	-43	3K
-26	560	-127	3.15K
-110	590	-44	3.3K
-27	620	-128	3.45K
-111	650	-45	3.6K
-28	680	-129	3.75K
-112	715	-46	3.9K
-29	750	-130	4.1K
-113	785	-47	4.3K
-30	820	-131	4.5K
-114	865	-48	4.7K
-31	910	-132	4.9K
-115	955	-49	5.1K
-32	1K	-133	5.35K
-116	1.05K	-50	5.6K
-33	1.1K	-134	5.9K
117	1.15K	-51	6.2K
-34	1.2K	-135	6.5K
-118	1.25K	-52	6.8K
-35	1.3K	-136	7.15K
-119	1.4K	-53	7.5K
-36	1.5K	-137	7.85K
-120	1.55K	-54	8.2K
-37	1.6K	-138	8.65K
-121	1.7K	-55	9.1K
-38	1.8K	-139	9.55K
-122	1.9K	-56	10K
-39	2.0K	-140	10.5K
-123	2.1K	-57	11K
-40	2.2K	-141	11.5K
-124	2.3K	1006750-58	12K
-41	2.4K	1006757-8	0
-125	2.55K	SEE NOTE 14	∞
1006750-42	2.7K		

R9			
PART NO.	VALUE	PART NO.	VALUE
1006750-25	510	1006750-134	5.9K
-109	535	-51	6.2K
-26	560	-135	6.5K
-110	590	-52	6.8K
-27	620	-136	7.15K
-111	650	-53	7.5K
-28	680	-137	7.85K
-112	715	-54	8.2K
-29	750	-138	8.65K
-113	785	-55	9.1K
-30	820	-139	9.55K
-114	865	-56	10K
-31	910	-140	10.5K
-115	955	-57	11K
-32	1K	-141	11.5K
-116	1.05K	-58	12K
-33	1.1K	-142	12.5K
-117	1.15K	-59	13K
-34	1.2K	-143	14K
-118	1.25K	-60	15K
-35	1.3K	-144	15.5K
-119	1.4K	-61	16K
-36	1.5K	-145	17K
-120	1.55K	-62	18K
-37	1.6K	-146	19K
-121	1.7K	-63	20K
-38	1.8K	-147	21K
-122	1.9K	-64	22K
-39	2.0K	-148	23K
-123	2.1K	-65	24K
-40	2.2K	-149	25.5K
-124	2.3K	-66	27K
-41	2.4K	-150	28.5K
-125	2.55K	-67	30K
-42	2.7K	-151	31.5K
-126	2.85K	-68	33K
-43	3K	-152	34.5K
-127	3.15K	-69	36K
-44	3.3K	-153	37.5K
-128	3.45K	-70	39K
-45	3.6K	-154	41K
-129	3.75K	-71	43K
-46	3.9K	-155	45K
-130	4.1K	-72	47K
-47	4.3K	-156	49K
-131	4.5K	-73	51K
-48	4.7K	-157	53.5K
-132	4.9K	-74	56K
-49	5.1K	-158	59K
-133	5.35K	-75	62K
-50	5.6K	-159	65K
-51	6.2K	-76	68K
-135	6.5K	-160	71.5K
-52	6.8K	-77	75K
1006750-73	51K	-161	78.5K
SEE NOTE 14	∞	-78	82K
		-162	86.5K
		-79	91K
		1006750-163	95.5K

R10			
PART NO.	VALUE	PART NO.	VALUE
1006750-32	1K	1006750-53	7.5K
-116	1.05K	-137	7.85K
-33	1.1K	-54	8.2K
-117	1.15K	-138	8.65K
-34	1.2K	-55	9.1K
-118	1.25K	-139	9.55K
-35	1.3K	-56	10K
-119	1.4K	-140	10.5K
-36	1.5K	-57	11K
-120	1.55K	-141	11.5K
-37	1.6K	-58	12K
-121	1.7K	-142	12.5K
-38	1.8K	-59	13K
-122	1.9K	-143	14K
-39	2.0K	-60	15K
-123	2.1K	-144	15.5K
-40	2.2K	-61	16K
-124	2.3K	-145	17K
-41	2.4K	-62	18K
-125	2.55K	-146	19K
-42	2.7K	-63	20K
-126	2.85K	-147	21K
-43	3K	-64	22K
-127	3.15K	-148	23K
-44	3.3K	-63	24K
-128	3.45K	-149	25.5K
-45	3.6K	-66	27K
-129	3.75K	-150	28.5K
-46	3.9K	-67	30K
-130	4.1K	-151	31.5K
-47	4.3K	-68	33K
-131	4.5K	-152	34.5K
-48	4.7K	-69	36K
-132	4.9K	-153	37.5K
-49	5.1K	-70	39K
-133	5.35K	-154	41K
-50	5.6K	-71	43K
-134	5.9K	-155	45K
-51	6.2K	-72	47K
-135	6.5K	-156	49K
-52	6.8K	1006750-73	51K
1006750-136	7.15K	SEE NOTE 14	∞

R7 AND R8	
PART NO.	VALUE
1006750-56	10K
-140	10.5K
-57	11K
-141	11.5K
-58	12K
-142	12.5K
-59	13K
-143	14K
-60	15K
-144	15.5K
-61	16K
-145	17K
-62	18K
-146	19K
-63	20K
-147	21K
-64	22K
-148	23K
-65	24K
-149	25.5K
-66	27K
-150	28.5K
-67	30K
-151	31.5K
-68	33K
-152	34.5K
-69	36K
-153	37.5K
-70	39K
-154	41K
-71	43K
-155	45K
-72	47K
-156	49K
-73	51K
-157	53.5K
-74	56K
-158	59K
-75	62K
-159	65K
-76	68K
-160	71.5K
-77	75K
-161	78.5K
-78	82K
-162	86.5K
-79	91K
1006750-163	95.5K

R3	
PART NO.	VALUE
1006750-157	53.5K
-74	56K
-158	59K
-75	62K
-159	65K
-76	68K
-160	71.5K
-77	75K
-161	78.5K
-78	82K
-162	86.5K
-79	91K
-163	95.5K
-80	100K
-164	105K
-81	110K
-165	115K
-82	120K
-166	125K
-83	130K
-167	140K
1006750-84	150K

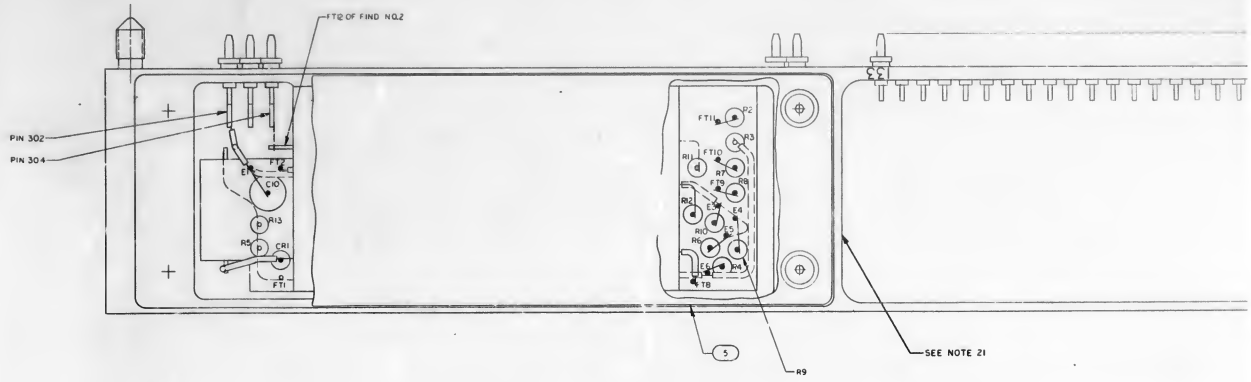

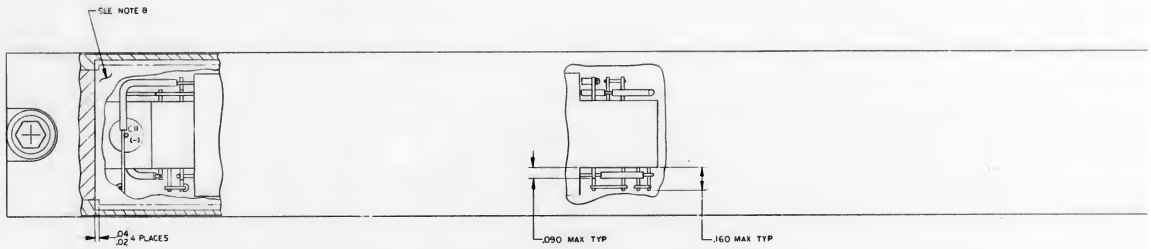

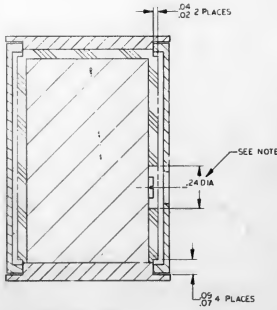

SECTION A-A

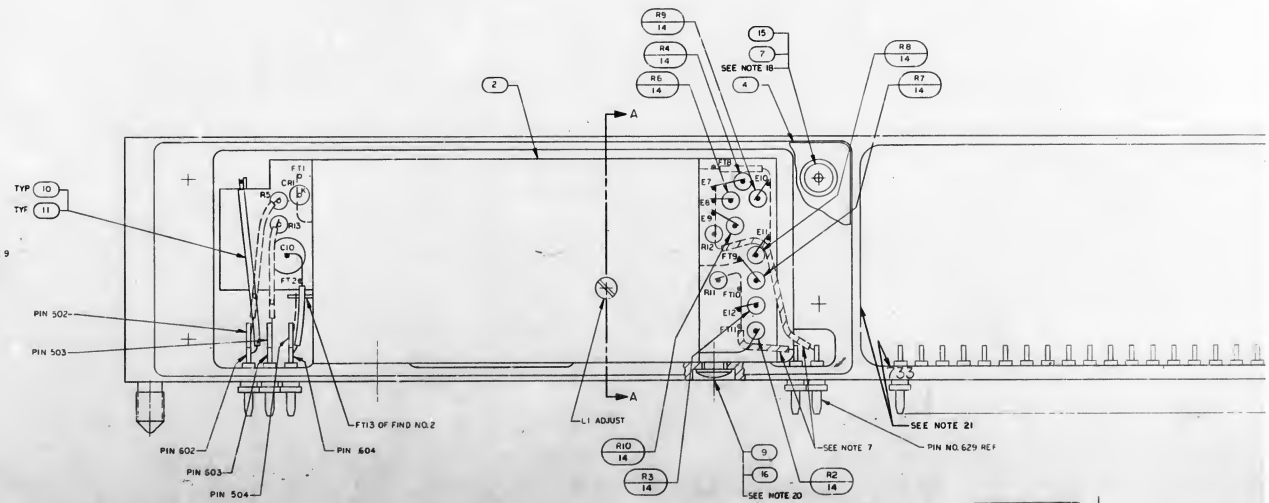

NOTES:

1. INTERPRET DRAWING IN ACCORDANCE WITH STANDARDS REFERENCED BY MIL-E-70327
2. WELDING ND1002003
3. AS DENOTES AS REQUIRED
4. BLACK DOT AND SINGLE SOLID LEADS INDICATE UPPER WIRING
5. WHITE DOT AND SINGLE DOTTED LEADS INDICATE LOWER LEVEL WIRING
6. UNLESS OTHERWISE SPECIFIED ALL WIRING SHALL BE IN ACCORDANCE WITH ND1002069
7. BEFORE ENCAPSULATING REMOVE CROSS HATCHED LEADS FROM R12 FIND NO. 2 TO PIN 629 AND FROM FT11 FIND NO. 2 TO PIN 628
8. ENCAPSULATE PER ND1002009 METHOD F USING 5% THINNER
9. INDICATED AREA TO BE FREE OF ENCAPSULATING COMPOUND
10. ENCAPSULATE PER ND1002002 PRIOR TO ASSEMBLY OF FIND NO. 2 TO FIND NO. 1. REMOVE FLASHING
11. MARK .10/.08 HIGH WHITE CHARACTERS PER ND1002019 AND ND1002122 TYPE II CLASS 2 USING INK 1006271-1, SERIALIZE PER ND1002023
12. MARK .26/.24 HIGH WHITE CHARACTERS PER ND1002019 AND ND1002122 TYPE II CLASS 2 USING INK 1006271-1
13. SELECT R2, R3, R4, AND R6 THRU R10 PER APPLICABLE PS FROM APPROPRIATE CHART UTILIZING 1006750 OR 1010733
14. WHEN VALUE OF R6, R8, R9 OR R10 IS INFINITY (∞) NO COMPONENT WILL BE USED
15. SEAL INSULATORS AND TERMINALS TO HEADER PER ND1002004 TYPE XI
16. COMPLETED ASSEMBLY SHALL BE TESTED IN ACCORDANCE WITH AND SHALL MEET ALL THE REQUIREMENTS OF PS 2003036
17. MOUNTING TORQUE FOR FIND NO 8 TO BE 15-20 INCH OUNCES
18. MOUNTING TORQUE FOR FIND NO. 7 TO BE 20/25 INCH POUNDS
19. SEAL FIND NO 8 TO FIND NO.1 PER ND1002004, TYPE XI
20. MOUNTING TORQUE FOR FIND NO 9 TO BE 4-6 INCH POUNDS
21. COAT INDICATED SURFACES: BOTH ENDS, TOP AND BOTTOM AND BOTH SIDES PER ND1002187 TYPE II

2003036 D

REVISIONS					
SYM	ZONE	DESCRIPTION	CH	DRAN	DATE	APPROVED
A		REVISED PER TORR 19684	WW			
B		REVISED PER TORR 23216	RTW			
C		REVISED PER TORR 24218	RCT			
D		REVISED PER TORR 25149	AJG			
E		REVISED PER TORR 25930				
F		REVISED PER TORR 27309				

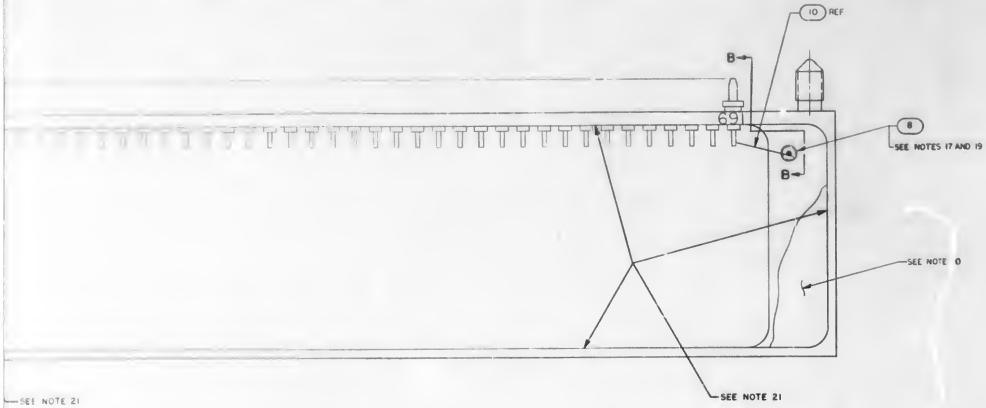

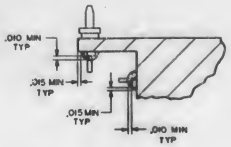

PARTIAL SECTION B-B
SEE NOTE 15

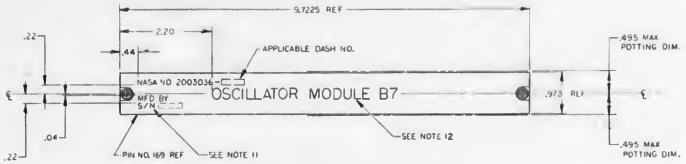

MARKING VIEW
SCALE 1/1

R2, R3, R4, R6, R7, R8, R9 AND R10					
PART NO.	VALUE	PART NO.	VALUE	PART NO.	VALUE
1010733-121	511	1010733-313	5110	1010733-490	42700
-125	536	-317	5360	-494	44800
-128	556	-320	5560	-497	46400
-133	590	-323	5760	-499	47500
-136	612	-325	5900	-501	48700
-141	649	-328	6120	-503	49900
-144	673	-330	6260	-505	51100
-149	715	-333	6490	-507	52300
-153	750	-336	6730	-509	53600
-156	777	-341	7150	-512	55600
-160	816	-345	7500	-515	57600
-165	866	-348	7770	-517	59000
-169	909	-352	8160	-520	61200
-173	953	-355	8450	-522	62600
-176	988	-357	8660	-525	64900
-178	1010	-361	9090	-528	67300
-181	1050	-365	9530	-530	69000
-185	1100	-368	9880	-533	71500
-189	1150	-370	10100	-535	73200
-192	1200	-373	10500	-537	75000
-195	1240	-377	11000	-540	77700
-199	1300	-381	11500	-542	79600
-204	1380	-384	12000	-544	81600
-209	1470	-387	12400	-546	83500
-213	1540	-391	13000	-549	86400
-216	1600	-396	13800	-551	88700
-221	1690	-401	14700	-553	90900
-225	1780	-405	15400	-555	93100
-230	1890	-408	16000	-557	95300
-234	1980	-413	16900	-560	98600
-239	2100	-417	17800	-562	101000
-243	2210	-420	18400	-565	105000
-246	2290	-422	18900	-569	110000
-250	2400	-426	19800	-573	115000
-254	2520	-428	20300	-576	120000
-259	2670	-431	21000	-579	124000
-264	2840	-435	22100	-583	130000
-269	3010	-438	22900	-586	138000
-273	3160	-442	24000	-593	147000
-277	3320	-446	25200	-597	154000
-280	3440	-451	26700	1010733-600	160000
-284	3610	-456	28400		
-287	3740	-461	30100		
-291	3920	-465	31600		
-295	4120	-469	33200		
-298	4270	-472	34400		
-302	4480	-476	36100		
-305	4640	-479	37400		
-308	4810	-483	39200		
1010733-310	4930	1010733-487	41200		

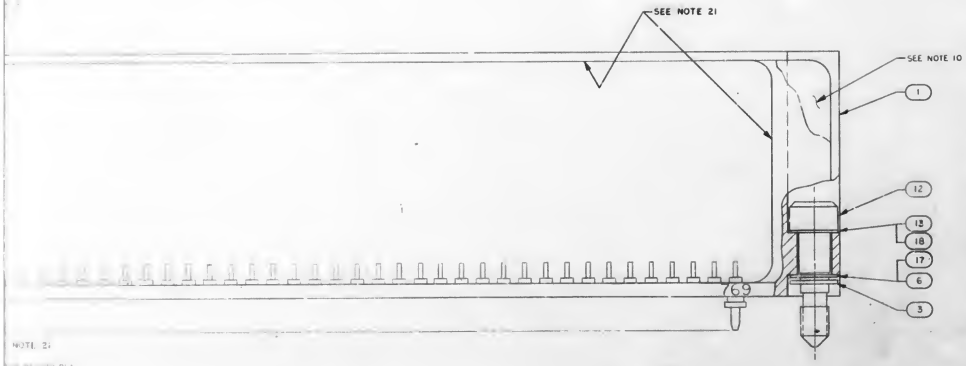

		2005003	SCHEMATIC	REF
2	—	NAS620A-4L	WASHER, FLAT	20
8	—	NAS620A-2	WASHER, FLAT	19
2	—	2004984-001	WASHER, FLAT	18
2	—	2004984-003	WASHER, FLAT	17
—	2	NAS620C-4L	WASHER, FLAT	16
—	8	NAS620C-2	WASHER, FLAT	15
8	8	SEE NOTE 13	RESISTOR	14
—	2	1004546-1	WASHER, FLAT	13
2	2	1004579-1	SCREW, JACKING	12
AR	AR	1006776-22	INSULATION, SLEEVING	11
AR	AR	1006757-8	WIRE, ELECTRICAL	10
2	2	1006783-18	SCREW, BUTTON HEAD	9
1	1	2004039	TERMINAL, THREADED	8
8	8	1006763-9	SCREW, BUTTON HEAD	7
—	2	1004546-3	WASHER, FLAT	6
1	1	2004062	COVER B	5
1	1	2004061	COVER A	4
2	2	MS16623-4015	RING, RETAINING	3
1	1	2003035-011	OSCILLATOR SUBASSEMBLY	2
1	1	2003037-011	HEADER HOUSING ASSEMBLY	1
QTY REQD	QTY REQD	PART OR IDENTIFYING NO	NOMENCLATURE OR DESCRIPTION	PART NO.

-011

LIST OF MATERIALS

2003200	
2003100	
NEXT ASSY	USED ON
APPLICATION	

UNLESS OTHERWISE SPECIFIED DIMENSIONS ARE IN INCHES. CAPACITOR VALUES ARE IN µf, RESISTOR VALUES ARE IN OHMS. TOLERANCES ON FRACTIONS ±1/64 DECIMALS ±.02 ANGLES ±2°. DO NOT SCALE THIS DRAWING. MATERIAL

MIT INSTRUMENTATION LAB CAMBRIDGE, MASS

MANNED SPACECRAFT CENTER HOUSTON, TEXAS

OSCILLATOR MODULE B7 ASSEMBLY

DRAWN E. W. Hanson 3/6/68
CHECKED
APPROVED
APPROVED
APPROVED MIT
APPROVED NASA

CODE IDENT NO. 80230 SIZE J DRAWING NO. 2003036

SCALE 4/1 SHEET OF

2003036 F

R2	
PART NO.	VALUE
1006750-39	2.0K
-124	2.3K
-125	2.55K
-42	2.7 K
-43	3K
-44	3.3K
-45	3.6K
-46	3.9K
-47	4.3K
-48	4.7K
-49	5.1K
-50	5.6K
-51	6.2K
-52	6.8K
-136	7.15K
-53	7.5K
-137	7.85K
-54	8.2K
-138	8.65K
-55	9.1K
-139	9.55K
-56	10K
-140	10.5K
-57	11K
-141	11.5K
-58	12K
-142	12.5K
-59	13K
-143	14K
-60	15K
-144	15.5K
-61	16K
-145	17K
-62	18K
-146	19K
-63	20K
-147	21 K
1006750-64	22K
SEE NOTE 14	∞

R4 AND R6			
PART NO.	VALUE	PART NO.	VALUE
1006750-25	510	1006750-126	2.85K
-122	535	-43	3K
-26	560	-127	3.15K
-110	590	-44	3.3K
-27	620	-128	3.45K
-111	650	-45	3.6K
-28	680	-129	3.75K
-112	715	-46	3.9K
-29	750	-130	4.1K
-113	785	-47	4.3K
-30	820	-131	4.5K
-114	865	-48	4.7K
-31	910	-132	4.9K
-115	955	-49	5.1K
-32	1K	-133	5.35K
-116	1.05K	-50	5.6K
-33	1.1K	-134	5.9K
-117	1.15K	-51	6.2K
-34	1.2K	-135	6.5K
-118	1.25K	-52	6.8K
-35	1.3K	-136	7.15K
-119	1.4K	-53	7.5K
-36	1.5K	-137	7.85K
-120	1.55K	-54	8.2K
-37	1.6K	-138	8.65K
-121	1.7K	-55	9.1K
-38	1.8K	-139	9.55K
-122	1.9K	-56	10K
-39	2.0K	-140	10.5K
-123	2.1K	-57	11K
-40	2.2K	-141	11.5K
-124	2.3K	1006750-58	12K
-41	2.4K	1005757-8	0
-125	2.55K	SEE NOTE 14	∞
1006750-42	2.7K		

R9			
PART NO.	VALUE	PART NO.	VALUE
1006750-25	510	1006750-134	5.9K
-109	535	-51	6.2K
-26	560	-135	6.5K
-110	590	-52	6.8K
-27	620	-136	7.15K
-111	650	-53	7.5K
-28	680	-137	7.85K
-112	715	-54	8.2K
-29	750	-138	8.65K
-113	785	-55	9.1K
-30	820	-139	9.55K
-114	865	-56	10K
-31	910	-140	10.5K
-115	955	-57	11K
-32	1K	-141	11.5K
-116	1.05K	-58	12K
-33	1.1K	-142	12.5K
-117	1.15K	-59	13K
-34	1.2K	-143	14K
-118	1.25K	-60	15K
-35	1.3K	-144	15.5K
-119	1.4K	-61	16K
-36	1.5K	-145	17K
-120	1.55K	-62	18K
-37	1.6K	-146	19K
-121	1.7K	-63	20K
-38	1.8K	-147	21K
-122	1.9K	-64	22K
-39	2.0K	-148	23K
-123	2.1K	-65	24K
-40	2.2K	-149	25.5K
-124	2.3K	-66	27K
-41	2.4K	-150	28.5K
-125	2.55K	-67	30K
-42	2.7K	-151	31.5K
-126	2.85K	-68	33K
-43	3K	-152	34.5K
-127	3.15K	-69	36K
-44	3.3K	-153	37.5K
-128	3.45K	-70	39K
-45	3.6K	-154	41K
-129	3.75K	-71	43K
-46	3.9K	-155	45K
-130	4.1K	-72	47K
-47	4.3K	-156	49K
-131	4.5K	-73	51K
-48	4.7K	-157	53.5K
-132	4.9K	-74	56K
-49	5.1K	-158	59K
-133	5.35K	1006750-75	62K
-50	5.6K	SEE NOTE 14	∞

R7 AND R8	
PART NO.	VALUE
1006750-56	10K
-140	10.5K
-57	11K
-141	11.5K
-58	12K
-142	12.5K
-59	13K
-143	14K
-60	15K
-144	15.5K
-61	16K
-145	17K
-62	18K
-146	19K
-63	20K
-147	21K
-64	22K
-148	23K
-65	24K
-149	25.5K
-66	27K
-150	28.5K
-67	30K
-151	31.5K
-68	33K
-152	34.5K
-69	36K
-153	37.5K
-70	39K
-154	41K
-71	43K
-155	45K
-72	47K
-156	49K
-73	51K
-157	53.5K
-74	56K
-158	59K
-75	62K
-159	65K
-76	68K
-160	71.5K
-77	75K
-161	78.5K
-78	82K
-162	86.5K
-79	91K
-163	95.5K
-80	100K
-164	105K
-81	110K
-165	115K
-82	120K
-166	125K
-83	130K
-167	140K
1006750-84	150K

R10			
PART NO.	VALUE	PART NO.	VALUE
1006750-32	1K	1006750-53	7.5K
-116	1.05K	-137	7.85K
-33	1.1K	-54	8.2K
-117	1.15K	-138	8.65K
-34	1.2K	-55	9.1K
-118	1.25K	-139	9.55K
-35	1.3K	-56	10K
-119	1.4K	-140	10.5K
-36	1.5K	-57	11K
-120	1.55K	-141	11.5K
-37	1.6K	-58	12K
-121	1.7K	-142	12.5K
-38	1.8K	-59	13K
-122	1.9K	-143	14K
-39	2.0K	-60	15K
-123	2.1K	-144	15.5K
-40	2.2K	-61	16K
-124	2.3K	-145	17K
-41	2.4K	-62	18K
-125	2.55K	-146	19K
-42	2.7K	-63	20K
-126	2.85K	-147	21K
-43	3K	-64	22K
-127	3.15K	-148	23K
-44	3.3K	-65	24K
-128	3.45K	-149	25.5K
-45	3.6K	-66	27K
-129	3.75K	-150	28.5K
-46	3.9K	-67	30K
-130	4.1K	-151	31.5K
-47	4.3K	-68	33K
-131	4.5K	-152	34.5K
-48	4.7K	-69	36K
-132	4.9K	-153	37.5K
-49	5.1K	-70	39K
-133	5.35K	-154	41K
-50	5.6K	-71	43K
-134	5.9K	-155	45K
-51	6.2K	-72	47K
-135	6.5K	-156	49K
-52	6.8K	1006750-73	51K
1006750-136	7.15K	SEE NOTE 14	∞

R3	
PART NO.	VALUE
1006750-157	53.5K
-74	56K
-158	59K
-75	62K
-159	65K
-76	68K
-160	71.5K
-77	75K
-161	78.5K
-78	82K
-162	86.5K
-79	91K
-163	95.5K
-80	100K
-164	105K
-81	110K
-165	115K
-82	120K
-166	125K
-83	130K
-167	140K
1006750-84	150K

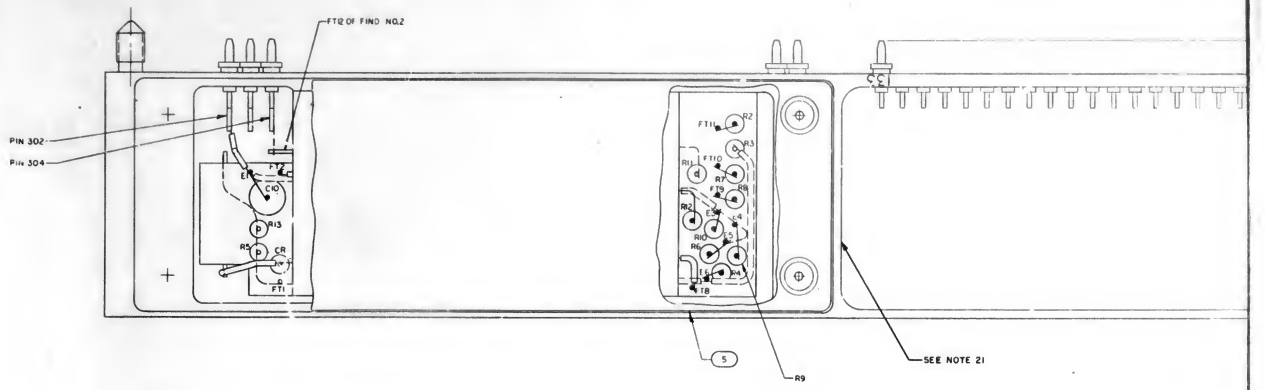

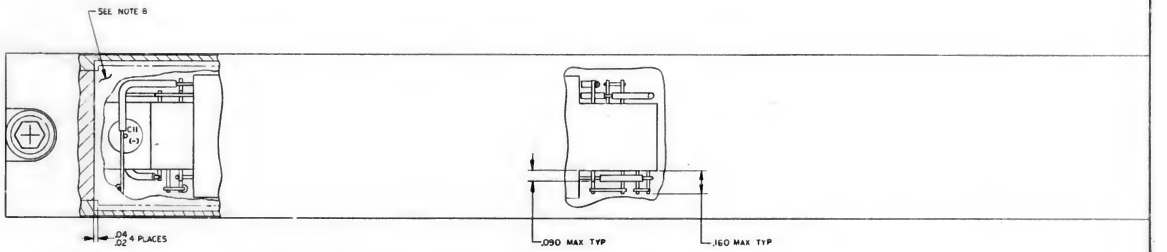

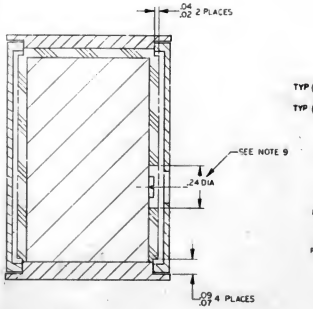

SECTION A-A

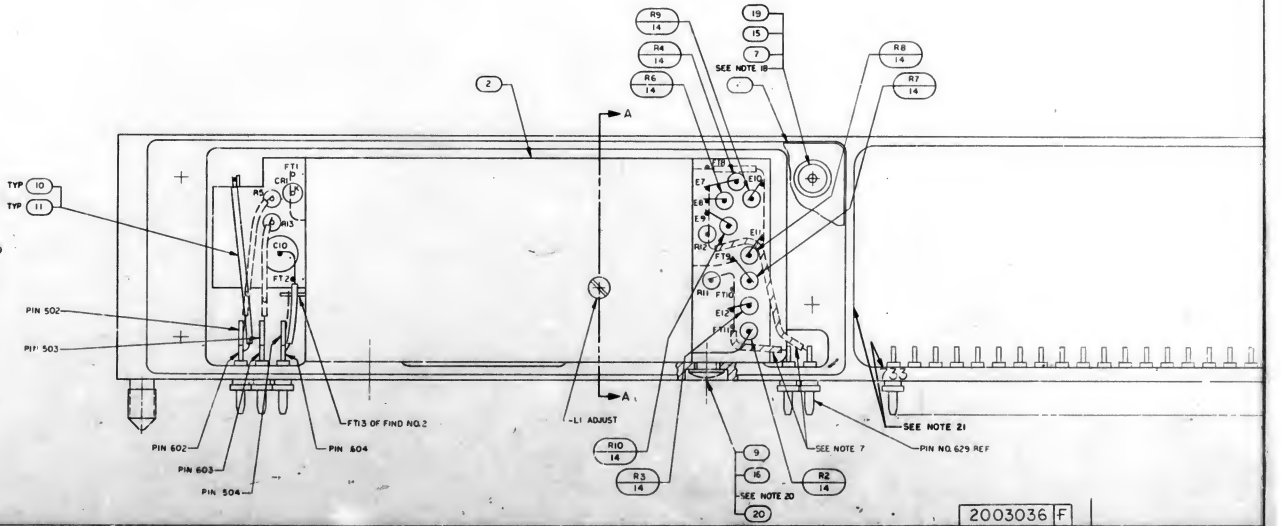

NOTES:

1. INTERPRET DRAWING IN ACCORDANCE WITH STANDARDS PRESCRIBED BY MIL-D-70327
2. WELD PER ND1002005
3. AR DENOTES AS REQUIRED
4. BLACK DOT AND SINGLE SOLID LEADS INDICATE UPPER LEVEL WIRING
5. WHITE DOT AND SINGLE DOTTED LEADS INDICATE LOWER LEVEL WIRING
6. UNLESS OTHERWISE SPECIFIED ALL WIRING SHALL BE IN ACCORDANCE WITH ND1002069
7. BEFORE ENCAPSULATING REMOVE CROSS HATCHED LEADS FROM R12 FIND NO. 2 TO PIN 629 AND FROM FT11 FIND NO. 2 TO PIN 628
8. ENCAPSULATE PER ND1002009 METHOD F USING 5% THINNER
9. INDICATED AREA TO BE FREE OF ENCAPSULATING COMPOUND
10. ENCAPSULATE PER ND1002002 PRIOR TO ASSEMBLY OF FIND NO. 2 TO FIND NO. 1, REMOVE FLASHING
11. MARK .101/.08 HIGH WHITE CHARACTERS PER ND1002019 AND ND1002122 TYPE II CLASS 2 USING INK 1006271-1, SERIALIZE PER ND1002023
12. MARK .26/.24 HIGH WHITE CHARACTERS PER ND1002019 AND ND1002122 TYPE II CLASS 2 USING INK 1006271-1
13. SELECT R2, R3, R4, AND R6 THRU R10 PER APPLICABLE PS FROM APROPRIATE CHART UTILIZING 1006750 OR 1010733
14. WHEN VALUE OF R6, R8, R9 OR R10 IS INFINITY (∞) NO COMPONENT WILL BE USED
15. SEAL INSULATORS AND TERMINALS TO HEADER PER ND1002004 TYPE XI
16. COMPLETED ASSEMBLY SHALL BE TESTED IN ACCORDANCE WITH AND SHALL MEET ALL THE REQUIREMENTS OF PS 2003036
17. MOUNTING TORQUE FOR FIND NO 8 TO BE 15-20 INCH OUNCES
18. MOUNTING TORQUE FOR FIND NO. 7 TO BE 20/25 INCH POUNDS
19. SEAL FIND NO. 8 TO FIND NO. 1 PER ND1002004, TYPE XI
20. MOUNTING TORQUE FOR FIND NO. 9 TO BE 4-6 INCH POUNDS
21. COAT INDICATED SURFACES: BOTH ENDS, TOP AND BOTTOM AND BOTH SIDES PER ND1002187 TYPE II

2003036 F

REVISIONS 19216						
SYM	ZONE	DESCRIPTION	DR	CHK	DATE	APPROVED
A		REVISED PER TDRR 23597				

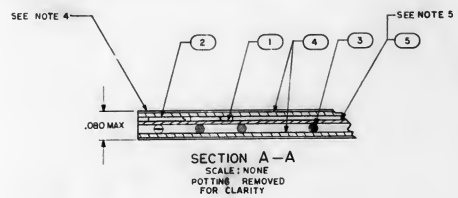

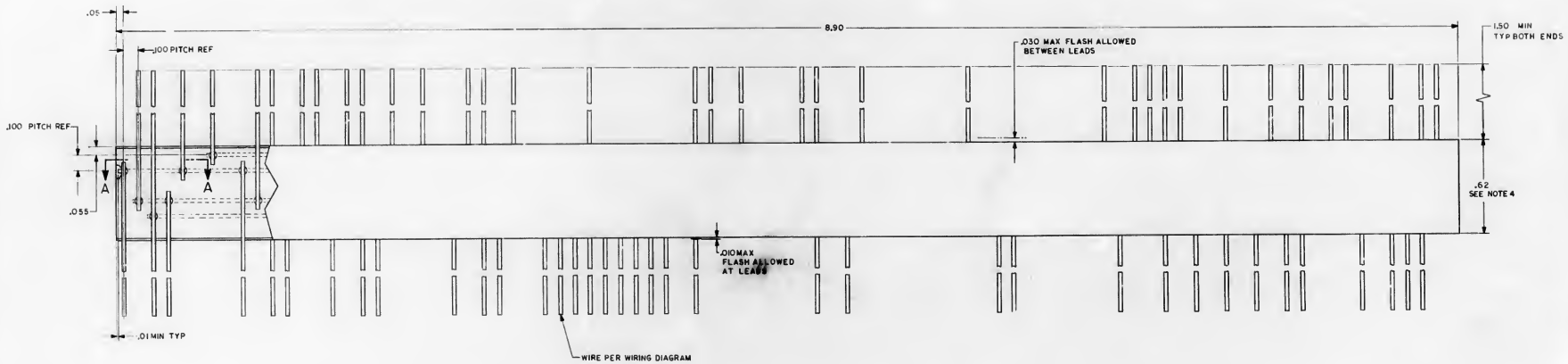

NOTES:

1. INTERPRET DRAWING IN ACCORDANCE WITH STANDARDS PRESCRIBED BY MIL-D-70327
2. AR DENOTES AS REQUIRED
3. WELD PER ND 1002005
4. ASSEMBLE PER ND 1002260
5. IDENTIFY WITH DRAWING NO. AND REVISION PER ND 1002019

QTY REQD	PART OR IDENTIFYING NO	NOMENCLATURE OR DESCRIPTION	FIND NO
	2005014	WIRING DIAGRAM	REF
AR	1006335-002	GLASS TAPE	4
AR	1006757-8	WIRE, ELECTRICAL	3
AR	1006757-1	WIRE, ELECTRICAL	2
1	2004087-011	INSULATOR, MATRIX	1

-011 LIST OF MATERIALS

2003040	
NEXT ASSY	USED ON
APPLICATION	

UNLESS OTHERWISE SPECIFIED DIMENSIONS ARE IN INCHES
CAPACITIVE VALUES ARE IN µf
RESISTOR VALUES ARE IN OHMS
TOLERANCES ON
FRACTIONS ± DECIMALS ± ANGLES ±
DO NOT SCALE THIS DRAWING

MATERIAL

MIT INSTRUMENTATION LAB CAMBRIDGE, MASS.

DRAWN
CHECKED
APPROVED
APPROVED M T
APPROVED MSC

MANNED SPACECRAFT CENTER
HOUSTON, TEXAS

MATRIX ASSEMBLY
ROPE DRIVER MODULE

CODE IDENT NO	SIZE	DRAWING NO.
80230	E	2003042

SCALE 4/1 SHEET 1 OF 1

REVISIONS					
SYM	ZONE	DESCRIPTION	DR	CHK	DATE	APPROVED
A		REVISED PER TDRR 28036				

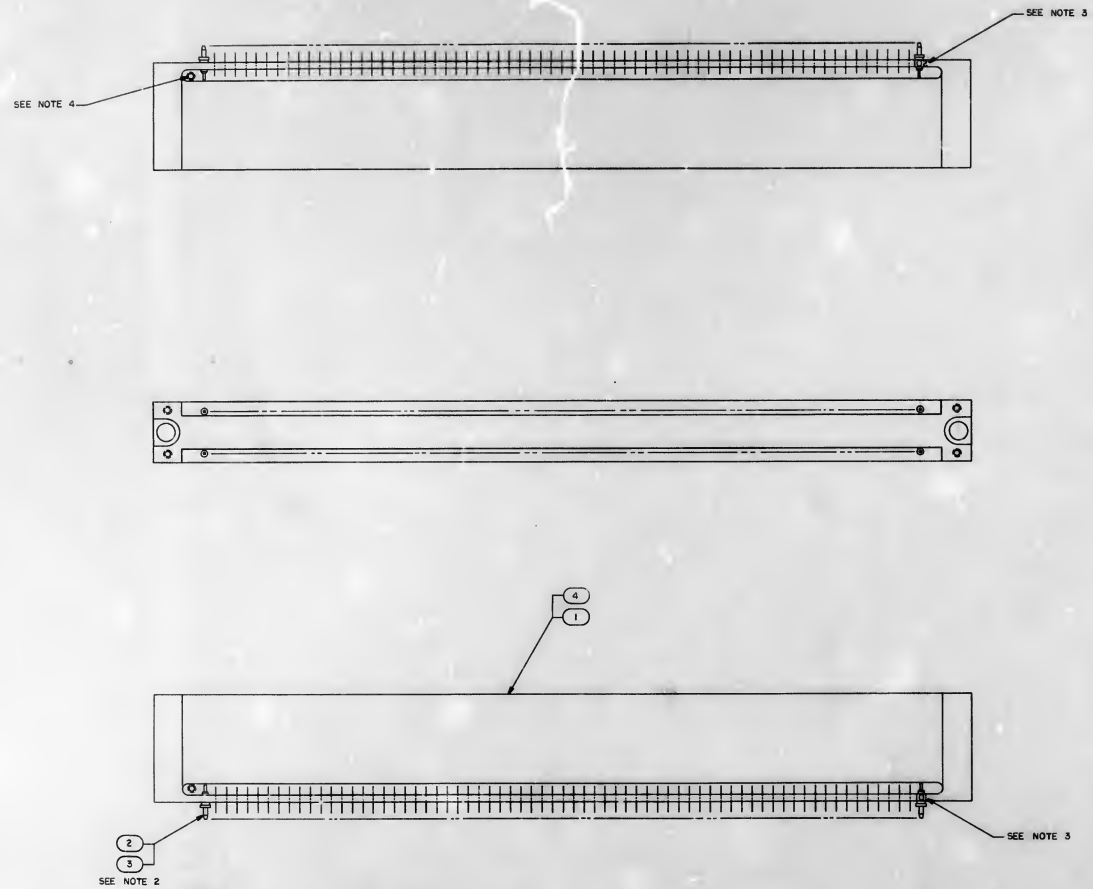

NOTES:
1. INTERPRET DRAWING IN ACCORDANCE WITH STANDARDS PRESCRIBED BY MIL-D-70327
2. ASSEMBLE FIND NO. 2 AND FIND NO. 3 TO FIND NO. 1 AND FIND NO. 4 PER N01002136
3. MARK .08/.06 HIGH WHITE CHARACTERS PER N01002019 AND N01002122 TYPE II, CLASS 2 USING INK 1006271-1
4. HOLE SHOWN FOR ORIENTATION PURPOSES ONLY
5. IDENT Y WITH DRAWING NO. AND REVISION PER N01002019

QTY REQD (-021)	QTY REQD (-011)	PART OR IDENTIFYING NO.	NOMENCLATURE OR DESCRIPTION	FIND NO.
1	—	2004708	HEADER, HOUSING	4
138	138	1006775	INSULATOR, WRAPOST - MALE, MINIATURE	3
138	138	1006782-1	CONTACT, WRAPOST - MALE, MINIATURE	2
—	1	2004094	HEADER, HOUSING	1

LIST OF MATERIALS

NEXT ASSY	USED ON
2003982	
2003981	
2003043	

APPLICATION

UNLESS OTHERWISE SPECIFIED DIMENSIONS ARE IN INCHES
CAPACITOR VALUES ARE IN µf
RESISTOR VALUES ARE IN OHMS
TOLERANCES ON
FRACTIONS ± DECIMALS ± ANGLES ±
DO NOT SCALE THIS DRAWING
MATERIAL

MIT INSTRUMENTATION LAB CAMBRIDGE, MASS.

DRAWN
CHECKED
APPROVED
APPROVED MIT
APPROVED NASA

MANNED SPACECRAFT CENTER
HOUSTON, TEXAS

HEADER HOUSING ASSY
SENSE AMPLIFIER MODULE

CODE IDENT NO 80230 | SIZE E | DRAWING NO. 2003044

SCALE 2/1 | SHEET | OF 1

MASTER

REVISIONS 2004 3				
SYM	DESCRIPTION	DATE	APPROVAL	
A	REVISED PER TDRR 20950	12/30/63		
B	REVISED PER TDRR 23945 DR CHK	11/4/64		
C	REVISED PER TDRR 25929 DR CHK	2/64		
D	REVISED PER TDRR 32993 DR CHK	2/9/67		

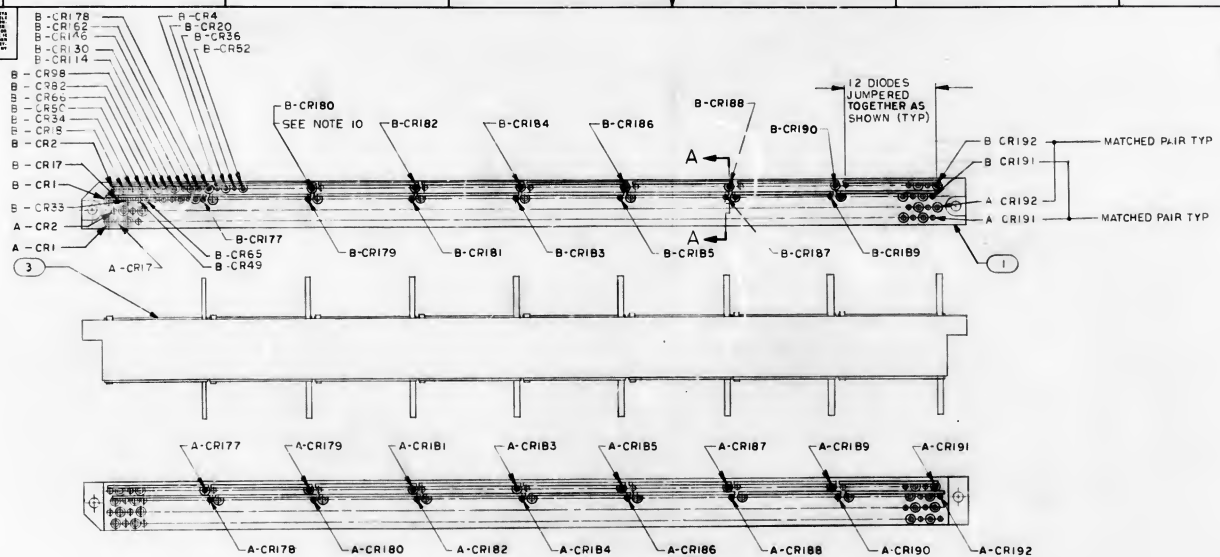

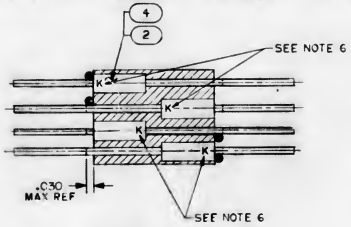

SECTION A-A
SCALE 4/1

NOTES:

1. INTERPRET DRAWING IN ACCORDANCE WITH STANDARDS PRESCRIBED BY MIL-D-70327
2. WELD PER ND 1002005
3. STAKE + COVER FIND NO.2 OR 4 TO FIND NO. 1 PER ND1002009 METHOD A
4. UNLESS OTHERWISE SPECIFIED, ALL WIRING SHALL BE IN ACCORDANCE WITH ND1002069
5. UNWELDED AND BLACK DOT (●) COMPONENT LEADS .50 MIN ABOVE FIND NO. 1
6. K DENOTES CATHODE SIDE OF DIODE
7. TRIM ALL WELDED COMPONENT LEADS EXCEPT BLACK DOT (●) LEADS .030 MAX ABOVE FIND NO. 1.
8. IDENTIFY WITH PART NO. PER ND1002019
9. AR DENOTES AS REQUIRED
10. BLACK DOT (●) DENOTES TWELFTH COMPONENT LEAD
11. FIND NO. 2 OR 4 NOTE 4 AND 8. EXAMPLE: A-CR1 AND B-CR1, MATCHED PAIRS LOAD IN ACCORDANCE WITH SHEET 2

QTY REQD	QTY REQD	PART OR IDENTIFYING NO	NOMENCLATURE OR DESCRIPTION	FIND NO
	–	2005935	SCHEMATIC	REF
	–	2005012	SCHEMATIC	REF
192	–	2004183-002	DIODE, MATCHED PAIR	4
AR	AR	1006757-12	WIRE, ELECTRICAL	3
–	192	2004183-002	DIODE, MATCHED PAIR	2
1	1	2004012	BLOCK COMPONENT DIODE	1
-021	-01		LIST OF MATERIALS	

NEXT ASSY	USED ON
2003972	
2003053	

APPLICATION

UNLESS OTHERWISE SPECIFIED DIMENSIONS ARE IN INCHES
TOLERANCES ON FRACTIONS DECIMALS ANGLES
DO NOT SCALE THIS DRAWING
MATERIAL
HEAT TREATMENT
FINAL FINISH

MIT INSTRUMENTATION LAB
Cambridge Mass

DRAWN DATE
CHECKED
APPROVAL
APPROVAL
NASA APPROVAL
MIT APPROVAL

MANNED SPACECRAFT CENTER
HOUSTON TEXAS

BLOCK COMPONENT DIODE ASSEMBLY
FIXED MEMORY MODULE

CODE IDENT NO 80230 | SIZE D | NASA DRAWING NO 2003045
SCALE 2/1 | WT | SHEET 1 OF 2

2003045 D

REVISIONS 200613

SYM	ZONE	DESCRIPTION	DR	CHK	DATE	APPROVED
A		REVISED PER TDRR 20950				
B		REVISED PER TDRR 24945				
C		REVISED PER TDRR 25929				
D		REVISED PER TDRR 32993				

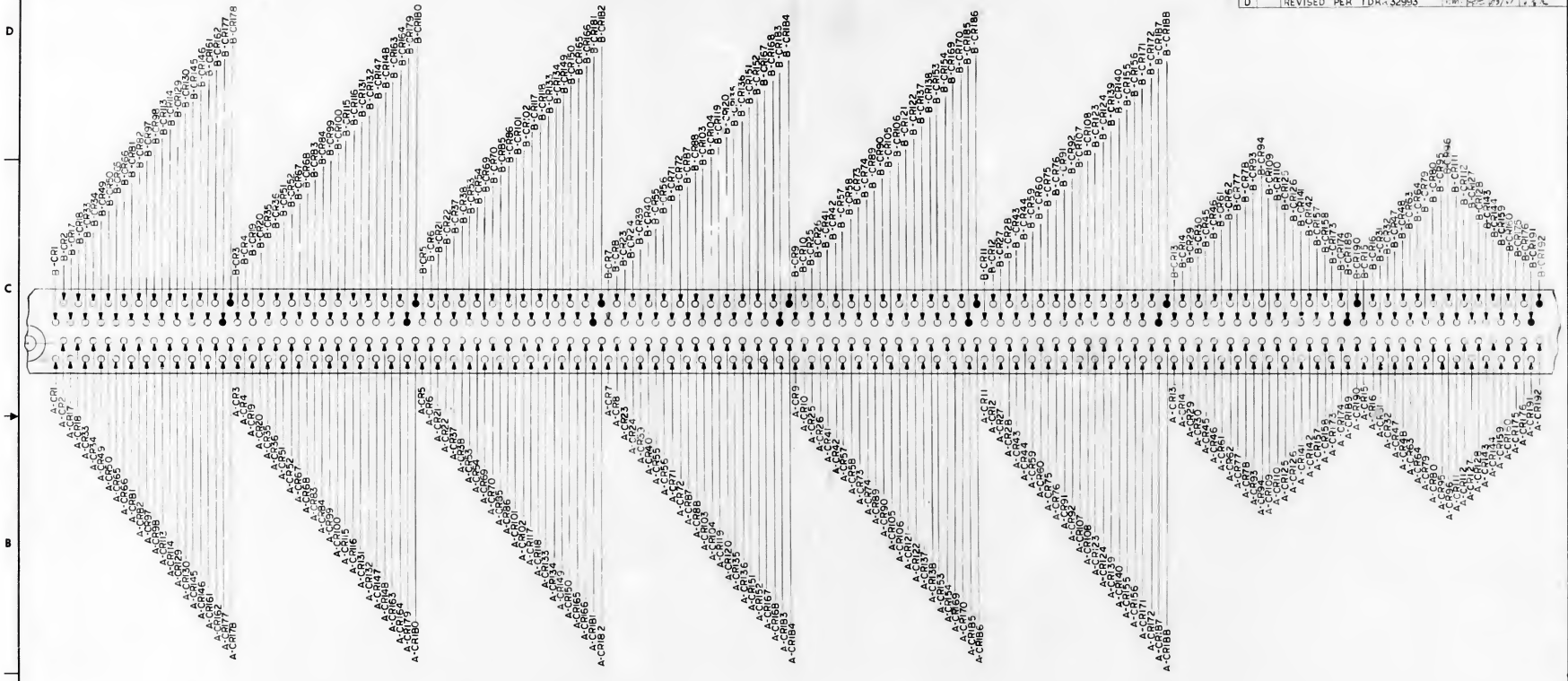

LOCATION OF MATCHED DIODE PAIRS
SEE NOTE II
SHEET 1

QTY REQD	PART OR IDENTIFYING NO	NOMENCLATURE OR DESCRIPTION	FIND NO
		LIS. OF MATERIALS	

UNLESS OTHERWISE SPECIFIED DIMENSIONS ARE IN INCHES
CAPACITOR VALUES ARE IN μf
RESISTOR VALUES ARE IN OHMS
TOLERANCES ON
FRACTIONS ± — DECIMALS ± — ANGLES ± —
DO NOT SCALE THIS DRAWING
MATERIAL

NEXT ASSY	USED ON
APPLICATION	

MIT INSTRUMENTATION LAB
CAMBRIDGE MASS

MANNED SPACECRAFT CENTER
HOUSTON, TEXAS

DRAWN J. A. Coffin 18 MAR 65
CHECKED
APPROVED 27 MAR 65
APPROVED Adam C. Wall 5 Jan 65

BLOCK COMPONENT DIODE ASSEMBLY
FIXED MEMORY MODULE

APPROVED MIT
APPROVED MSC
DATE

CODE IDENT NO 80230
SIZE D
DRAWING NO. 2003045
SCALE 4/1
SHEET 2 OF 2

2003045 D

REVISIONS 2006			
SYM	DESCRIPTION	DATE	APPROVAL
A	REVISED PER TDRR 20950	5/24/65	
B	REVISED PER TDRR 23447	11/14/65	
C	REVISED PER TDRR 24215 DR CHK APPD	4/1/67	
D	REVISED PER TDRR 26870 DR CHK APPD	5/14/68	
E	CHANGED PER TDRR 29564 DR CHK APPD	6/24/68	

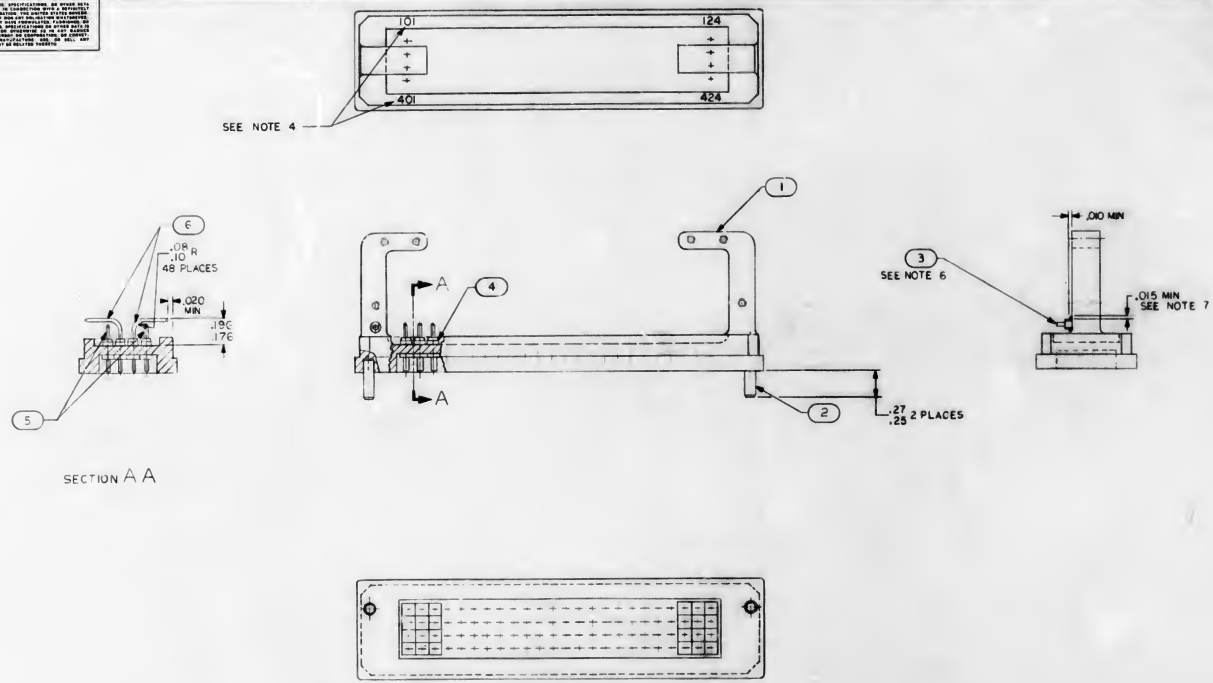

NOTES:

1. INTERPRET DRAWING IN ACCORDANCE WITH STANDARDS PRESCRIBED BY MIL-D-70327
2. ASSEMBLE FIND NO. 4,5 AND 6 TO FIND NO. 1 PER ND1002136
3. IDENTIFY WITH PART NO. PER ND1002019
4. MARK .08/.06 HIGH BLACK CHARACTERS PER ND1002019 AND ND1002122, TYPE II CLASS 2 USING INK 1006271H1 APPROXIMATELY AS SHOWN
5. ~~ENCAPSULATE PER ND1002183 TYPE I~~
6. MOUNTING TORQUE FOR FIND NO.3 TO BE 15-20 INCH OUNCES
7. SEAL FIND NO.3 TO FIND NO.1 PER ND1002004 TYPE VI

QTY REQD	PART OR IDENTIFYING NO.	NOMENCLATURE OR DESCRIPTION	FIND NO.
48	1006782-15	CONTACT, WRAPOST, MALE	6
48	1006782-1	CONTACT, WRAPOST, MALE	5
96	1006775	INSULATOR, WRAPOST, MALE	4
1	2004039	TERMINAL, TIE, EADED	3
2	MS16555-618	PIN, STRAIGHT HEADLESS	2
1	2004075	CONNECTOR, PLATE	1

-011 LIST OF MATERIALS

2003053	NEXT ASSY	USED ON
APPLICATION		

UNLESS OTHERWISE SPECIFIED DIMENSIONS ARE IN INCHES
TOLERANCES ON
FRACTIONS ± DECIMALS ± ANGLES ±
DO NOT SCALE THIS DRAWING
MATERIAL
HEAT TREATMENT
FINAL FINISH

MIT INSTRUMENTATION LAB CAMBRIDGE, MASS
DRAWN DATE
CHECKED
APPROVAL
APPROVAL
NASA APPROVAL
MIT APPROVAL

MANNED SPACECRAFT CENTER HOUSTON, TEXAS

CONNECTOR PLATE ASSEMBLY
FIXED MEMORY MODULE

CODE IDENT NO. 80230 | SIZE D | NASA DRAWING NO. 2003046
SCALE 2/1 | WT | SHEET 1 OF 1

2003046 E

REVISIONS				
SYM	DESCRIPTION	DATE	APPROVAL	
A	REVISED PER TDRR 20950	1/21/65		
B	REVISED PER TDRR 25929 DR CHK	2/4/66		
C	REVISED PER TDRR 32993 DR CHK	3/9/67		

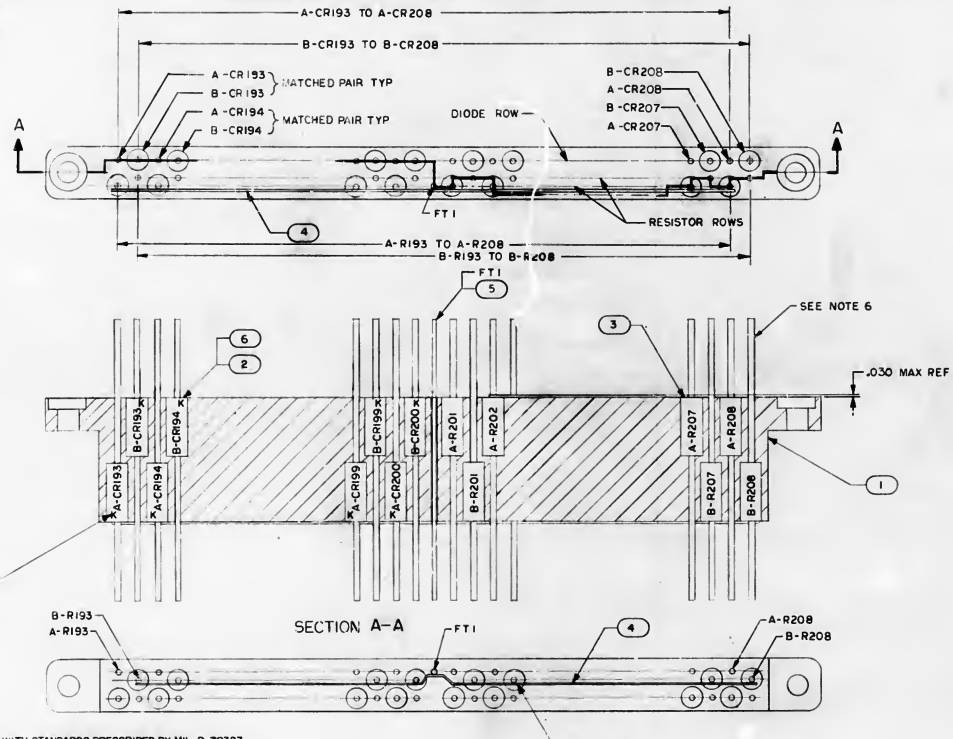

NOTES

1. INTERPRET DRAWING IN ACCORDANCE WITH STANDARDS PRESCRIBED BY MIL-D-70327
2. WELD PER ND 1002005
3. STAKE FIND NO. 3 TO FIND NO. 1 PER ND1002009 METHOD A
4. K DENOTES CATHODE SIDE OF DIODE
5. UNLESS OTHERWISE SPECIFIED ALL WIRING SHALL BE IN ACCORDANCE WITH ND1002069
6. ALL LEADS .50 MIN ABOVE FIND NO. 1
8. IDENTIFY WITH PART NO PER ND1002019
9. AR DENOTES AS REQUIRED
10. FIND NO. 2 OR 6 NOTED A AND B, EXAMPLE: A-CR193 AND B-CR193, MATCHED PAIRS
11. STAKE & COVER FIND NO 2 OR 6 TO FIND NO 1 PER ND1002009 METHOD A

QTY REQD	QTY REQD	PART OR IDENTIFYING NO	NOMENCLATURE OR DESCRIPTION	FIND NO
X	—	2005935	SCHEMATIC	REF
—	X	2005012	SCHEMATIC	REF
16	—	2004183-002	DIODE, MATCHED PAIR	6
AR	AR	1006757-8	WIRE, ELECTRICAL	5
AR	AR	1006757-12	WIRE, ELECTRICAL	4
32	32	1006750-32	RESISTOR	3
—	16	2004103-002	DIODE, MATCHED PAIR	2
1	1	2004073	BLOCK, RESISTOR, DIODE	1
-021	-011	LIST OF MATERIALS		

2003972	
2003053	
NEXT ASSY	USED ON
APPLICATION	

UNLESS OTHERWISE SPECIFIED DIMENSIONS ARE IN INCHES
TOLERANCES ON FRACTIONS ± DECIMALS ± ANGLES ±
DO NOT SCALE THIS DRAWING
MATERIAL
HEAT TREATMENT
FINAL FINISH

MIT INSTRUMENTATION LAB CAMBRIDGE MASS
DWG OR CONTRACT
DRAWN DATE
CHECKED
APPROVAL
APPROVAL
NASA APPROVAL
MIT APPROVAL

MANNED SPACECRAFT CENTER
HOUSTON, TEXAS

BLOCK, RESISTOR-DIODE ASS'Y
FIXED MEMORY MODULE

CODE IDENT NO	SIZE	NASA DRAWING NO
80230	D	2003048
SCALE 4/1	WT	SHEET 1 OF 1

REVISIONS					
SYM	ZONE	DESCRIPTION	DR	CHK	DATE	APPROVED
A		REVISED PER TDRR 21340				
B		REVISED PER TDRR 27737				

PART NO.	DIM.A REF	DIM.B MIN	DIM.C MIN	MADE FROM	DETAIL	DIM.D MIN
2003051 – 011	.060	.060	.800	1006806-19	E	L200
– 012	.334		.560	-20	B	—
– 013	.060		.265	-19	A	—
– 014	.334		1.145	-20	E	L545
– 015	.502		.627	-21	C	—
– 016	.295		.422	-22	D	—
– 017	.087		.232	-23	A	—
2003051 – 018	.295	.060	.417	1006806-22	A	—

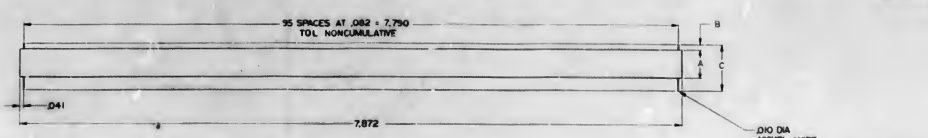

DETAIL A

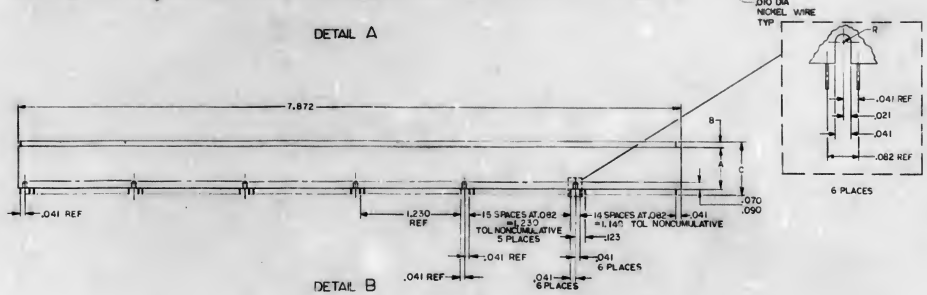

DETAIL B

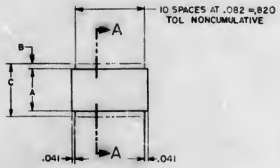

DETAIL C

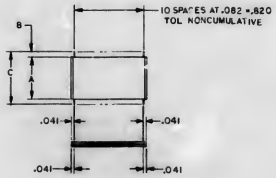

DETAIL D

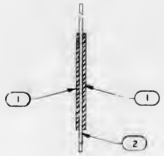

SECTION A-A
ENLARGED SECTION
TYP DETAIL A,B,C,D AND E

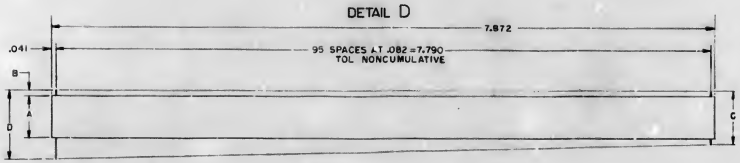

DETAIL E

NOTES
1. INTERPRET DRAWING IN ACCORDANCE WITH STANDARDS PRESCRIBED BY MIL-D-70327
2. A R DENOTES AS REQUIRED
3.
4. IDENTIFY WITH PART NO. PER ND10C2019

QTY REQD	PART OR IDENTIFYING NO.	NOMENCLATURE OR DESCRIPTION	FIND NO.
AR	1006757-12	WIRE, ELECTRICAL	2
AR	1006806-SEE CHART	TAPE, INSULATION	1

LIST OF MATERIALS

UNLESS OTHERWISE SPECIFIED DIMENSIONS ARE IN INCHES
CAPACITOR VALUES ARE IN μf
RESISTOR VALUES ARE IN OHMS
TOLERANCES ON
FRACTIONS DECIMALS ANGLES
± ± .005 ±
DO NOT SCALE THIS DRAWING
MATERIAL

2003053
NEXT ASSY
USED ON
APPLICATION

MIT INSTRUMENTATION LAB CAMBRIDGE, MASS.

MANNED SPACECRAFT CENTER HOUSTON, TEXAS

DRAWN
CHECKED
APPROVED
APPROVED
APPROVED MIT
APPROVED NASC

MATRIX ASSY
FIXED MEMORY MODULE

CODE IDENT NO 80230 | SIZE E | DRAWING NO. 2003051

DATE | SCALE NONE | SHEET | OF

2003051

REVISIONS 2 of 2

SYM	DESCRIPTION	DATE	APPROVAL
A	REVISED PER TDRR 20950	7-26-66	WK
B	REVISED PER TDRR 27080 DR R.S. CHK J.M. APPD	3/15/66	
C	REVISED PER TDRR 32993 DR T. CHK.	7/9/67	

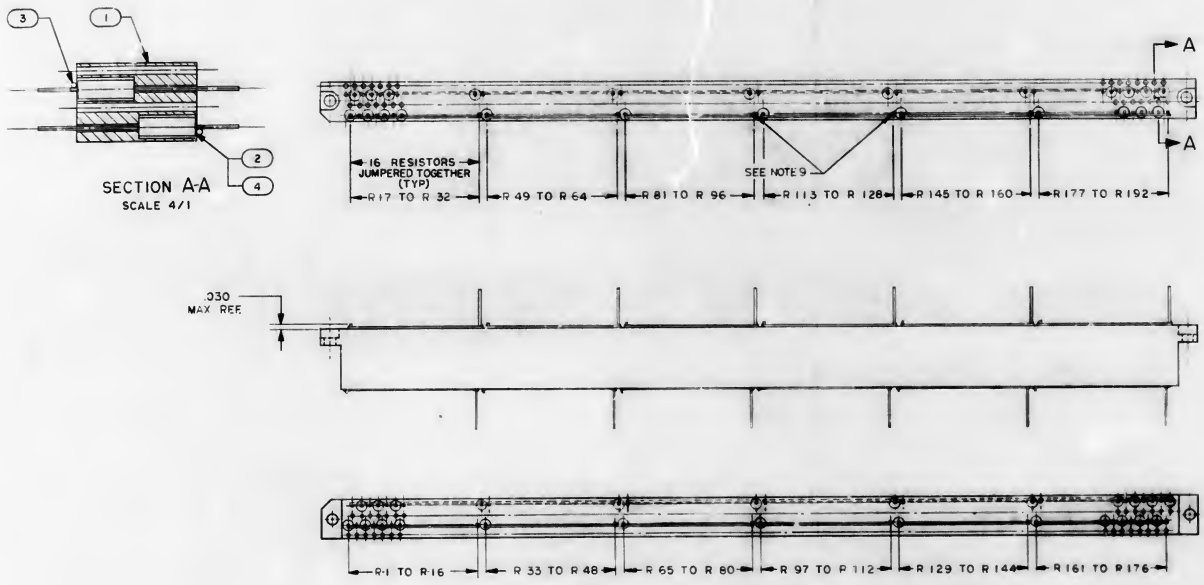

NOTES:

1. INTERPRET DRAWING IN ACCORDANCE WITH STANDARDS PRESCRIBED BY MIL-D-70327
2. WELD PER ND 1002005
3. STAKE FIND NO 2 OR 4 TO FIND NO 1 PER ND1002009 METHOD D
4. UNLESS OTHERWISE SPECIFIED ALL WIRING SHALL BE IN ACCORDANCE WITH ND1002069
5. UNWELDED AND BLACK AND BLACK DOT (•) COMPONENT LEADS .50 MIN ABOVE FIND NO 1
6. TRIM ALL WELDED COMPONENT LEADS EXCEPT BLACK DOT (•) LEADS .030 MAX. ABOVE FIND NO. 1
7. IDENTIFY WITH PART NO. PER ND1002019
8. A R DENOTES AS REQUIRED
9. (•) DENOTES SIXTEENTH COMPONENT LEAD

QTY REQD	QTY REQD	PART OR IDENTIFYING NO.	NOMENCLATURE OR DESCRIPTION	FIND NO.
X	–	2005935	SCHEMATIC	REF
–	X	2005012	SCHEMATIC	REF
192	–	1006750-30	RESISTOR	4
AR	AR	1006757-2	WIRE, ELECTRICAL	3
–	192	1006750-32	RESISTOR	2
1	1	2004064	COMPONENT BLOCK	1
-021	-011		LIST OF MATERIALS	

NEXT ASSY	USED ON
2003972	
2003053	

APPLICATION

UNLESS OTHERWISE SPECIFIED DIMENSIONS ARE IN INCHES
TOLERANCES ON
FRACTIONS ± DECIMALS ± ANGLES ±
DO NOT SCALE THIS DRAWING
MATERIAL
HEAT TREATMENT
FINAL FINISH

MIT INSTRUMENTATION LAB
CAMBRIDGE MASS
DRAWN DATE 7/26/66
CHECKED
APPROVAL
APPROVAL
NASA APPROVAL
MIT APPROVAL

MANNED SPACECRAFT CENTER
HOUSTON, TEXAS

COMPONENT BLOCK, RESISTOR ASSEMBLY
FIXED MEMORY MODULE

CODE IDENT NO.	SIZE	NASA DRAWING NO
80230	D	2003052
SCALE 2/1	WT	SHEET 1 OF 1

2003052

REVISIONS						
SYM	ZONE	DESCRIPTION	DR	CHK	DATE	APPROVED
A		REVISED PER TDRR 22148	SAP	[illegible]	[illegible]	[illegible]

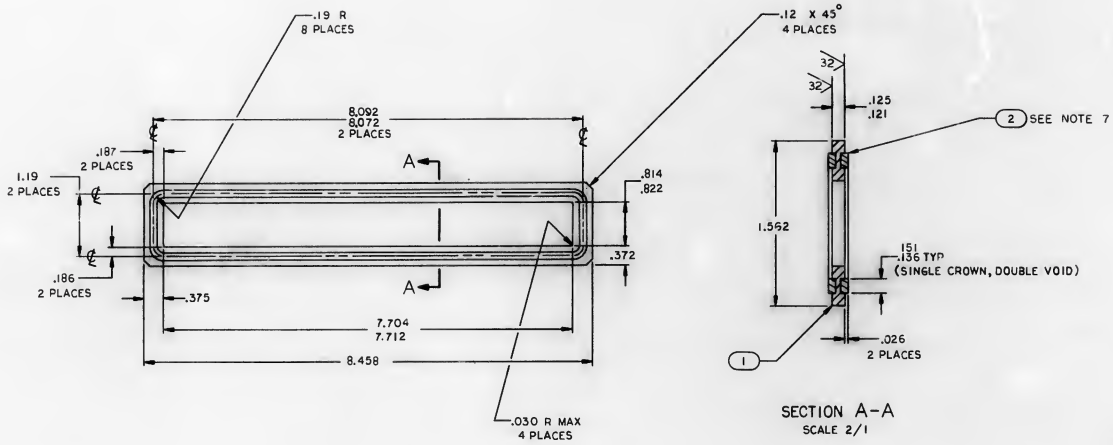

NOTES

1. INTERPRET DRAWING IN ACCORDANCE WITH STANDARDS PRESCRIBED BY MIL-D-70327
2. MATERIAL: 6061-T6 AL PER QQ-A-250/11, TEMP T6
3. REMOVE BURRS AND SHARP EDGES .005/.015
4. ALL SURFACES 125 UNLESS OTHERWISE SPECIFIED
5. FINISH: CHROMATE PER MIL-C-5541, TYPE II, GRADE C, CLASS 3
6. IDENTIFY WITH PART NO. PER ND1002019
7. FIND NO.2 TO BE MOLDED TO FIND NO.1 AS SHOWN

QTY REQD	PART OR IDENTIFYING NO.	NOMENCLATURE OR DESCRIPTION	FIND NO.
2	———	GASKET, RUBBER/BUTYL (IIR) (AMS 3238 A)	2
1	2003055-001	GASKET	1

-011 LIST OF MATERIALS

2003100	
NEXT ASSY	USED ON
APPLICATION	

UNLESS OTHERWISE SPECIFIED
DIMENSIONS ARE IN INCHES
CAPACITOR VALUES ARE IN μf
RESISTOR VALUES ARE IN OHMS
TOLERANCES ON
FRACTIONS ± — DECIMALS .XX ±.03 .XXX ±.005 .XXXX ±.0001 ANGLES ± 5°
DO NOT SCALE THIS DRAWING

MATERIAL
SEE NOTE 2

MIT INSTRUMENTATION LAB
CAMBRIDGE, MASS.

MANNED SPACECRAFT CENTER
HOUSTON, TEXAS

DRAWN Ed Powers 21 Oct 65
CHECKED [illegible]
APPROVED
APPROVED [illegible]
APPROVED MIT [illegible]
APPROVED MSC [illegible] DATE

GASKET, SEAL
360 PIN CONN

CODE IDENT NO.	SIZE	DRAWING NO.
80230	D	2003055

SCALE 1/1 SHEET 1 OF 1

2003055 A

REVISIONS					
SYM	ZONE	DESCRIPTION	DR.	CHK.	DATE	APPROVED
A		REVISED PER TDRR 20951				
B		REVISED PER TDRR 26198				
C		REVISED PER TCRR 33414				

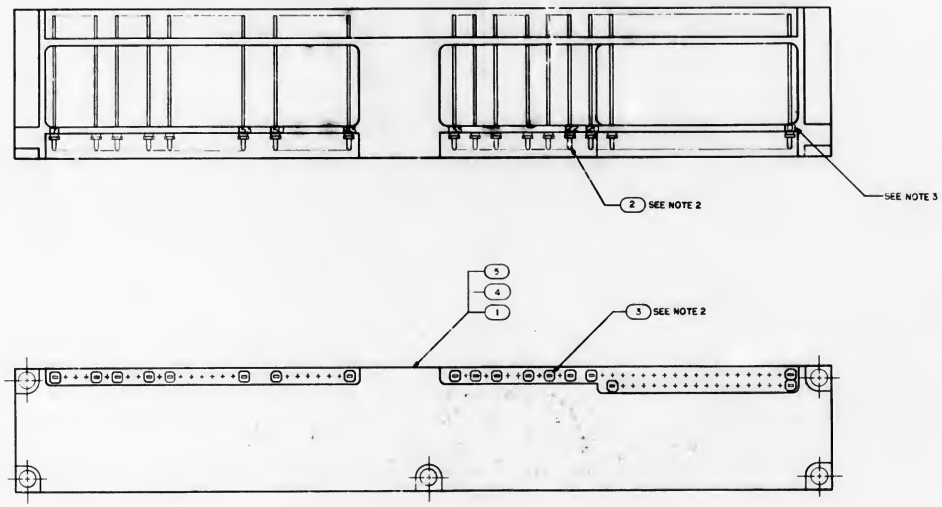

NOTES

1. INTERPRET DRAWING IN ACCORDANCE WITH STANDARDS PRESCRIBED BY MIL-D-70327
2. ASSEMBLE FIND NO. 2 AND 3 TO FIND NO. 1, 4 OR 5 PER ND1002136
3. MARK .08/.06 HIGH WHITE CHARACTERS PER ND 1002019 AND ND 1002122 TYPE II CLASS 2 USING INK 1006271-1
4. IDENTIFY WITH PART NO. PER ND1002019

QTY REQD		QTY REQD	PART OR IDENTIFYING NO	NOMENCLATURE OR DESCRIPTION	FIND NO
1	—	—	[illegible]	HEADER HOUSING	4
—	1	—	2004888	HEADER HOUSING	4
77	77	77	1006775	INSULATOR, WRAPOST-MALE MINIATURE	3
77	77	77	1006782-7	CONTACT, WRAPOST-MALE, MINIATURE	2
—	—	1	2004105	HEADER, HOUSING	1

031-521-011 LIST OF MATERIALS

NEXT ASSY	USED ON
2003891	
2003953	
2003056	

APPLICATION

UNLESS OTHERWISE SPECIFIED DIMENSIONS ARE IN INCHES CAPACITOR VALUES ARE IN μf RESISTOR VALUES ARE IN OHMS TOLERANCES ON FRACTIONS DECIMALS ANGLES ± — ± — ± —

DO NOT SCALE THIS DRAWING

MATERIAL

MIT INSTRUMENTATION LAB CAMBRIDGE MASS.

DRAWN / CHECKED / APPROVED / APPROVED MIT / APPROVED NEC / DATE

MANNED SPACECRAFT CENTER HOUSTON TEXAS

HEADER HOUSING ASSY
POWER SUPPLY MODULE

CODE IDENT NO. 80230 | SIZE E | DRAWING NO. 2003057

SCALE 2/1 | SHEET 1 OF 1

PART NO.	MODULE DECK NO.	PART NO.	MODULE DECK NO.
2003060-011	0200	2003060-841	0282
2003060-021	0201	2003060-851	0283
2003060-031	0202	2003060-861	0284
2003060-041	0203	2003060-871	0285
2003060-051	0204	2003060-881	0286
2003060-061	0205	2003060-891	0287
2003060-071	0206	2003060-901	0288
2003060-081	0207	2003060-921	0289
2003060-091	0208	2003060-931	0290
2003060-111	0209	2003060-941	0291
2003060-121	0210	2003060-951	0292
2003060-131	0211	2003060-961	0293
2003060-141	0212	2003060-971	0294
2003060-151	0213	2003060-981	0295
2003060-161	0214	2003060-991	0296
2003060-171	0215	2003060-1011	0297
2003060-181	0216	2003060-1021	0298
2003060-191	0217	2003060-1031	0299
2003060-211	0218	2003060-1041	0300
2003060-221	0219	2003060-1051	0301
2003060-231	0220	2003060-1061	0302
2003060-241	0221	2003060-1071	0303
2003060-251	0222	2003060-1081	0304
2003060-261	0223	2003060-1091	0305
2003060-271	0224	2003060-1111	0306
2003060-281	0225	2003060-1121	0307
2003060-291	0226	2003060-1131	0308
2003060-311	0227	2003060-1151	0309
2003060-321	0230	2003060-1141	0310
2003060-331	0229	2003060-1161	0311
2003060-341	0231	2003060-1161	0312
2003060-351	0238	2003060-1171	0313
2003060-361	0239	2003060-1181	0314
2003060-371	0240		
2003060-381	0241		
2003060-391	0242		
2003060-401	0243		
2003060-411	0244		
2003060-431	0245		
2003060-441	0246		
2003060-451	0247		
2003060-461	0248		
2003060-471	0249		
2003060-481	0250		
2003060-491	0251		
2003060-511	0252		
2003060-521	0253		
2003060-531	0254		
2003060-541	0255		
2003060-551	0256		
2003060-561	0257		
2003060-571	0258		
2003060-581	0259		
2003060-591	0260		
2003060-611	0261		
2003060-621	0262		
2003060-631	0263		
2003060-641	0264		
2003060-651	0265		
2003060-661	0266		
2003060-671	0267		
2003060-681	0268		
2003060-691	0269		
2003060-711	0270		
2003060-721	0271		
2003060-731	0272		
2003060-741	0273		
2003060-751	0274		
2003060-761	0275		
2003060-771	0276		
2003060-781	0277		
2003060-791	0278		
2003060-811	0279		
2003060-821	0280		
2003060-831	0281		

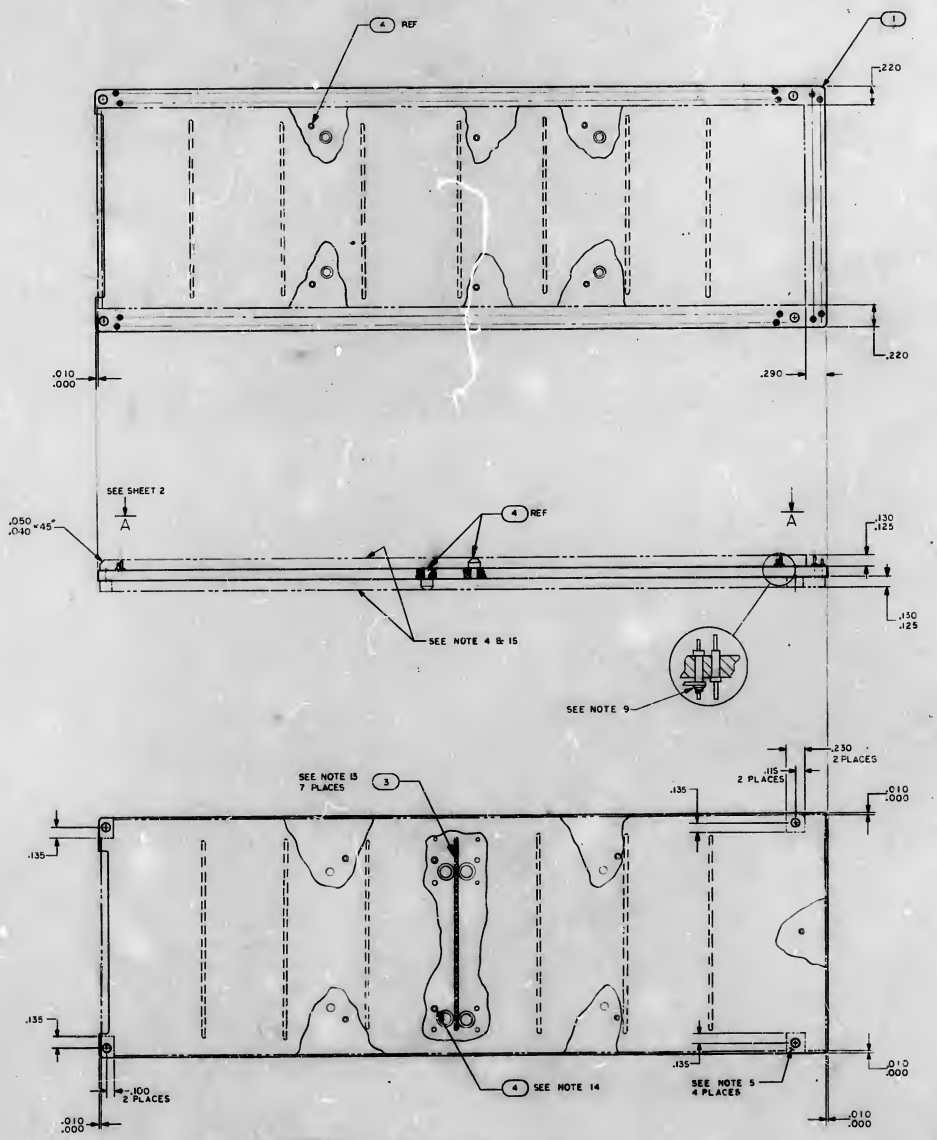

NOTES:

1. INTERPRET DRAWING IN ACCORDANCE WITH STANDARDS PRESCRIBED BY MIL-D-70327
2. SOLDER PER ND1002071, USING SOLDER COMP SN60 WIRE FORM SOLID PER ND1002075
3. SENSEWIRE USING FINO NO. 2 PER MODULE DECK NO. AS SHOWN IN CHART
4. ENCAPSULATE PER ND1002002 REMOVE FLASHING
5. INDICATED AREAS TO BE FREE OF ENCAPSULATING COMPOUND
6. IDENTIFY WITH PART NO. PER ND1002019
7. A R DENOTES AS REQUIRED
8. SEE SHEET 2 FOR TERMINAL IDENTIFICATION
9. DO NOT TIN LEADS OF FINO NO. 2. SOLDER WRAPS TO BE 2 TO 4 TURNS OF UNINSULATED WIRE AND 3/4 TO 1 1/2 TURNS OF INSULATED WIRE AROUND TERMINAL AS SHOWN. PROVIDE SERVICE LOOP
10. AS LITTLE SLACK AS POSSIBLE SHALL BE MAINTAINED WITHOUT THE SENSE WIRES CROSSING ANY CORE OPENING
11. THE MAXIMUM NUMBER OF SENSE WIRES PER SIDE INCLUDING INCORRECT WIRES WHICH HAVE BEEN REPLACED SHALL BE 210
12. INSULATION ON THE SENSE WIRE RUNS SHALL BE INTACT EXCEPT AT SOLDER JOINTS. THE CUT ENDS OF INCORRECT WIRES SHALL BE COATED WITH CLEAR INSULATING COMPOUND PER SCD1006305
13. WRAP & TIE AROUND WIRED ASSY APPROXIMATELY AS SHOWN WITH ONE WRAP OF FINO NO. 3
14. STAKE FINO NO. 4 TO FINO NO. 1 PER ND1002004 TYPE X
15. VISIBLE COMPONENTS, FINO NO. 2, 3, & 4, SHALL NOT EXCEED ENCAPSULATED SURFACE
16. DUMMY SENSE WIRE LINES, IF REQUIRED, RUNNING ADJACENT AND ON THE SAME SIDE OF FINO NO. 1 SHALL BE ROUTED IN OPPOSITE DIRECTIONS

REFERENCES:

1. PROCESS REQUIREMENTS FOR CONTROL AND INSPECTION OF ROPE MEMORY ASSEMBLIES ND1002285
2. FIXED MEMORY FIXTURE DWG AP 22500

REVISIONS

SYM	ZONE	DESCRIPTION	DR	CHK	DATE	APPROVED
A		REVISED PER TDRR 20860				
B		REVISED PER TDRR 21340				
C		REVISED PER TDRR 23549				
D		REVISED PER TDRR 25773				
E		REVISED PER TDRR 26558				
F		REVISED PER TDRR 26872				
G		REVISED PER TDRR 28620				
H		REVISED PER TDRR 28863				
J		REVISED PER TDRR 29741				
K		REVISED PER TDRR 30064				
L		REVISED PER TDRR 30689				
M		REVISED PER TDRR 33116				
N		REVISED PER TDRR 33461				
P		REVISED PER TDRR 33543				
R		REVISED PER TDRR 33605				
S		REVISED PER TDRR 34140				
T		REVISED PER TDRR 34489				
U		REVISED PER TDRR 34707				
V		REVISED PER TDRR 35328				
W		REVISED PER TDRR 35643				
Y		REVISED PER TDRR 36217				
Z		REVISED PER TDRR 36532				
AA		REVISED PER TDRR 36810				
AB		REVISED PER TDRR 36838				
AC		REVISED PER TDRR 36970				
AD		REVISED PER TDRR 37008				
AE		REVISED PER TDRR 37148				
AF		REVISED PER TDRR 37387				
AG		REVISED PER TDRR 37427				
AH		REVISED PER TDRR 37464				
AJ		REVISED PER TDRR 37535				
AK		REVISED PER TDRR 37592				
AL		REVISED PER TDRR 37616				
AM		REVISED PER TDRR 37664				
AN		REVISED PER TDRR 37743				

QTY REQD	PART OR IDENTIFYING NO.	NOMENCLATURE OR DESCRIPTION	FIND NO.
13	2004896	SPACER	4
AR	1012507-001	TAPE, LACING & TYING	3
AR	1006275-2	WIRE ELECTRICAL	2
1	2003049-011	CORE HOLDER ASSY	1

LIST OF MATERIALS

2003972	
2003053	
NEXT ASSY	USED ON

APPLICATION

UNLESS OTHERWISE SPECIFIED DIMENSIONS ARE IN INCHES CAPACITOR VALUES ARE IN μf RESISTOR VALUES ARE IN OHMS TOLERANCES ON FRACTIONS ±1/16 DECIMALS ±.010 ∠ ±5° DO NOT SCALE THIS DRAWING

MATERIAL

MIT INSTRUMENTATION LAB CAMBRIDGE MASS

DRAWN
CHECKED
APPROVED
APPROVED
APPROVED MIT
APPROVED MSC
DATE

MANNED SPACECRAFT CENTER HOUSTON, TEXAS

SENSE WIRING ASSY SIDE A FIXED MEMORY MODULE

CODE IDENT NO. 80230 | SIZE E | DRAWING NO. 2003060

SCALE 2/1 | SHEET 1 OF

Y	REVISED PER TDRR 36217					
Z	REVISED PER TDRR 36532					
AA	REVISED PER TDRR 36810					
AB	REVISED PER TDRR 36858					
AC	REVISED PER TDRR 36970					
AD	REVISED PER TDRR 37009					
AE	REVISED PER TDRR 37148					
AF	REVISED PER TDRR 37387					
AG	REVISED PER TDRR 37427					
AH	REVISED PER TDRR 37454					
AJ	REVISED PER TDRR 37535					
AK	REVISED PER TDRR 37562					
AL	REVISED PER TDRR 37612					
AM	REVISED PER TDRR 37664					
AN	REVISED PER TDRR 37743					

REVISIONS

SYM	ZONE	DESCRIPTION	DR	CHK	DATE	APPROVED
A		REVISED PER TDRR 20860				
B		REVISED PER TDRR 21349				
C		REVISED PER TDRR 23529				
D		REVISED PER TDRR 26773				
E		REVISED PER TDRR 26858				
F		REVISED PER TDRR 26872				
G		REVISED PER TDRR 28630				
H		REVISED PER TDRR 28863				
J		REVISED PER TDRR 29741				
K		REVISED PER TDRR 30064				
L		REVISED PER TDRR 30883				
M		REVISED PER TDRR 33110				
N		REVISED PER TDRR 33461				
P		REVISED PER TDRR 33543				
R		REVISED PER TDRR 33605				
S		REVISED PER TDRR 34140				
T		REVISED PER TDRR 34459				
U		REVISED PER TDRR 34897				
V		REVISED PER TDRR 35139				
W		REVISED PER TDRR 35649				

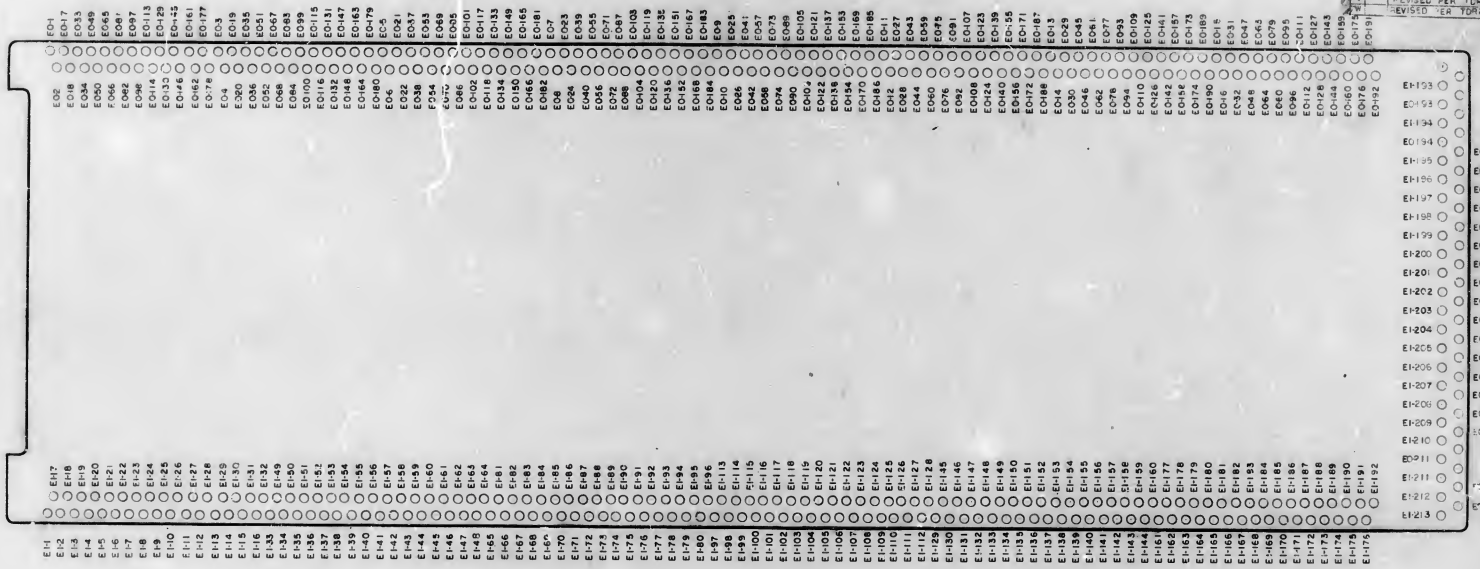

VIEW A-A

QTY REQD	PART OR IDENTIFYING NO	NOMENCLATURE OR DESCRIPTION	FUSED NO
		LIST OF MATERIALS	

UNLESS OTHERWISE SPECIFIED DIMENSIONS ARE IN INCHES CAPACITOR VALUES ARE IN μf RESISTOR VALUES ARE IN OHMS TOLERANCES ON FRACTIONS DECIMALS ANGLES ± ± ± DO NOT SCALE THIS DRAWING

MATERIAL

NEXT ASSY | USED ON

APPLICATION

MIT INSTRUMENTATION LAB CAMBRIDGE, MASS.

DRAWN | CHECKED | APPROVED | APPROVED | APPROVED MIT | APPROVED MSC

MANNED SPACECRAFT CENTER HOUSTON, TEXAS

SENSE WIRING ASSY SIDE A FIXED MEMORY MODULE

CODE IDENT NO 80230 | SIZE E | DRAWING NO 2003060

DATE | SCALE 2/1 | SHEET 3 OF 3

PART NO.	MODULE DECK NO.
2003061-011	0200
2003061-021	0201
2003061-031	0202
2003061-041	0203
2003061-051	0204
2003061-061	0205
2003061-071	0206
2003061-081	0207
2003061-091	0208
2003061-101	0209
2003061-111	0210
2003061-121	0211
2003061-131	0212
2003061-141	0213
2003061-151	0214
2003061-161	0215
2003061-171	0216
2003061-181	0217
2003061-191	0218
2003061-211	0219
2003061-221	0220
2003061-231	0221
2003061-241	0222
2003061-251	0223
2003061-261	0224
2003061-271	0225
2003061-281	0226
2003061-291	0227
2003061-321	0230
2003061-331	0229
2003061-341	0237
2003061-351	0238
2003061-361	0239
2003061-371	0240
2003061-381	0241
2003061-391	0242
2003061-401	0243
2003061-411	0244
2003061-431	0245
2003061-441	0246
2003061-451	0247
2003061-461	0248
2003061-471	0249
2003061-481	0250
2003061-491	0251
2003061-511	0252
2003061-521	0253
2003061-531	0254
2003061-541	0255
2003061-551	0256
2003061-561	0257
2003061-571	0258
2003061-581	0259
2003061-591	0260
2003061-611	0261
2003061-621	0262
2003061-631	0263
2003061-641	0264
2003061-651	0265
2003061-661	0266
2003061-671	0267
2003061-691	0268
2003061-691	0269
2003061-711	0270
2003061-721	0271
2003061-731	0272
2003061-741	0273
2003061-751	0274
2003061-761	0275
2003061-771	0276
2003061-781	0277
2003061-791	0278
2003061-811	0279
2003061-821	0280
2003061-831	0281

PART NO.	MODULE DECK NO.
2003061-841	0282
2003061-851	0283
2003061-861	0284
2003061-871	0285
2003061-881	0286
2003061-891	0287
2003061-911	0288
2003061-921	0289
2003061-931	0290
2003061-941	0291
2003061-951	0292
2003061-961	0293
2003061-971	0294
2003061-981	0295
2003061-991	0296
2003061-1011	0297
-1021	0298
-1031	0299
-1041	0300
-1051	0301
2003061-1061	0302
2003061-1071	0303
2003061-1081	0304
2003061-1091	0305
2003061-1111	0306
2003061-1121	0307
2003061-1131	0308
2003061-1141	0309
2003061-1151	0310
2003061-1161	0311
2003061-1171	0312
2003061-1181	0313
2003061-1191	0314

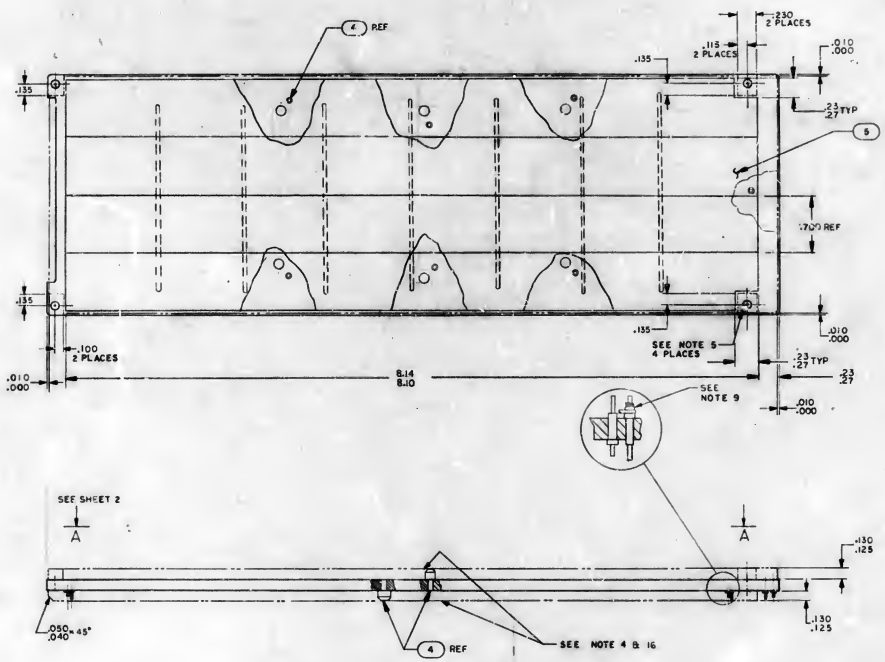

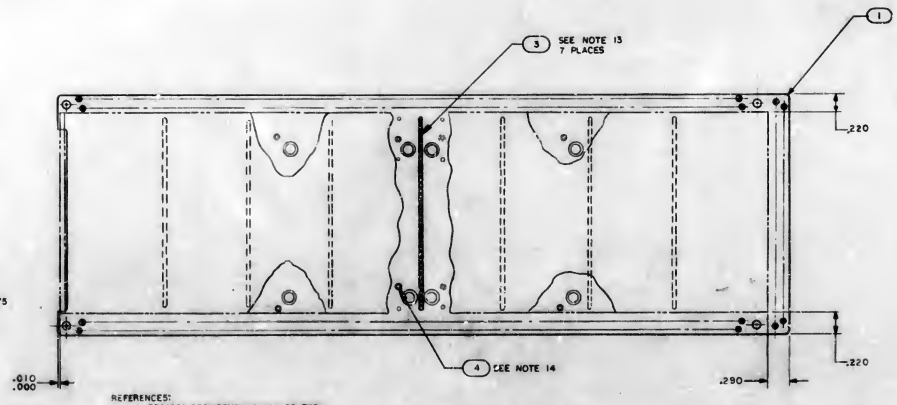

NOTES:

1. INTERPRET DRAWING IN ACCORDANCE WITH STANDARDS PRESCRIBED BY MIL-D-70327
2. SOLDER PER ND1002071, USING SOLDER COMP SN60 WIRE FORM SOLID PER ND1002075
3. SENSEWIRE USING FIND NO. 2 PER MODULE DECK NO. AS SHOWN IN CHART
4. ENCAPSULATE PER ND1002002, REMOVE FLASHING
5. INDICATED AREAS TO BE FREE OF ENCAPSULATING COMPOUND
6. IDENTIFY WITH PART NO. PER ND1002019
7. AR DENOTES AS REQUIRED
8. SEE SHEET 2 FOR TERMINAL IDENTIFICATION
9. DO NOT TIN LEADS OF FIND NO. 2. SOLDER WRAPS TO BE 2 TO 4 TURNS OF UNINSULATED WIRE AND 3/4 TO 1 1/2 TURNS OF INSULATED WIRE AROUND TERMINAL AS SHOWN. PROVIDE SERVICE LOOP
10. AS LITTLE SLACK AS POSSIBLE SHALL BE MAINTAINED WITHOUT THE SENSE WIRES CROSSING ANY CORE OPENINGS
11. THE MAXIMUM NUMBER OF SENSE WIRES PER SIDE INCLUDING INCORRECT WIRES WHICH HAVE BEEN REPLACED SHALL BE 210
12. INSULATION ON THE SENSE WIRE RUNS SHALL BE INTACT EXCEPT AT SOLDER JOINTS. THE CUT ENDS OF INCORRECT WIRES SHALL BE COATED WITH CLEAR INSULATING COMPOUND PER SCD 1008303
13. WRAP & TIE AROUND WIRED ASSY APPROXIMATELY AS SHOWN WITH ONE WRAP OF FIND NO. 3
14. STAKE FIND NO. 4 TO FIND NO. 1 PER ND1002004 TYPE X
15. BOND FIND NO. 5 TO SURFACE OF ENCAPSULATION OUTLINED AS SHOWN
16. VISIBLE COMPONENTS, FIND NO. 2, 3 & 4 SHALL NOT EXCEED ENCAPSULATED SURFACE
17. DRAWN SHOWS WIRE LENGTHS IF REQUIRED, RUNNING ADJACENT AND ON THE SAME SIDE OF FIND NO. 1 SHALL BE ROUTED IN SAME DIRECTIONS

REFERENCES:

1. PROCESS REQUIREMENTS FOR CONTROL AND INSPECTION OF ROPE MEMORY ASSEMBLIES ND 1002285
2. FIXED MEMORY FIXTURE DWG NO AP 22500

REVISIONS

SYM	ZONE	DESCRIPTION	DR	CHK	CAT
A		REVISED PER TDRR 20855			
B		REVISED PER TDRR 23540			
C		REVISED PER TDRR 25589			
D		REVISED PER TDRR 25773			
E		REVISED PER TDRR 26558			
F		REVISED PER TDRR 26873			
G		REVISED PER TDRR 28620			
H		REVISED PER TDRR 28863			
J		REVISED PER TDRR 29741			
K		REVISED PER TDRR 30064			
L		REVISED PER TDRR 30593			
M		REVISED PER TDRR 33116			
N		REVISED PER TDRR 33461			
P		REVISED PER TDRR 33563			
R		REVISED PER TDRR 33609			
S		REVISED PER TDRR 34140			
T		REVISED PER TDRR 34489			
U		REVISED PER TDRR 34847			
V		REVISED PER TDRR 35319			
W		REVISED PER TDRR 35661			
Y		REVISED PER TDRR 36217			
AA		REVISED PER TDRR 36533			
AB		REVISED PER TDRR 36840			
AC		REVISED PER TDRR 36851			
AD		REVISED PER TDRR 36970			
AE		REVISED PER TDRR 37047			
AF		REVISED PER TDRR 37367			
AG		REVISED PER TDRR 37427			
AH		REVISED PER TDRR 37454			
AJ		REVISED PER TDRR 37455			
AK		REVISED PER TDRR 37582			
AL		REVISED PER TDRR 37695			
AM		REVISED PER TDRR 37644			
AN		REVISED PER TDRR 37743			

QTY REQD	PART OR IDENTIFYING NO	NOMENCLATURE OR DESCRIPTION	FIND NO
AR	1006806-8	INSULATION TAPE, ELECTRICAL	5
13	2004896	SPACER	4
AR	1012-07-001	TAPE, LACING & TYING	3
AR	1006275-C	WIRE, ELECTRICAL	2
1	2003050-011	CORE HOLDER ASSY	1

LIST OF MATERIALS

2003972	
2003053	
NEXT ASSY	USED ON
APPLICATION	

UNLESS OTHERWISE SPECIFIED DIMENSIONS ARE IN INCHES
CAPACITOR VALUES ARE IN μf
RESISTOR VALUES ARE IN OHMS
TOLERANCES ON
FRACTIONS ± DECIMALS ± ANGLES ±
DO NOT SCALE THIS DRAWING
MATERIAL

MIT INSTRUMENTATION LAB CAMBRIDGE MASS

MANNED SPACECRAFT CENTER HOUSTON, TEXAS

SENSE WIRING ASSY
SIDE B
FIXED MEMORY MODULE

CODE IDENT NO	SIZE	DRAWING NO
80230	E	2003031

SCALE 2/1 | SHEET 1 OF 2

MASTER

SYM	ZONE	DESCRIPTION						APPROVED
Y		REVISED PER TDRR 36317						728
Z		REVISED PER TDRR 36533						728
AA		REVISED PER TDRR 36810						728
AB		REVISED PER TDRR 36898						728
AC		REVISED PER TDRR 36970						728
AD		REVISED PER TDRR 37008						728
AE		REVISED PER TDRR 37149						728
AF		REVISED PER TDRR 37387						728
AG		REVISED PER TDRR 37467						728
AH		REVISED PER TDRR 37456						728
AJ		REVISED PER TDRR 37535						728
AK		REVISED PER TDRR 37582						728
AL		REVISED PER TDRR 37616						728
AM		REVISED PER TDRR 37674						728
AN		REVISED PER TDRR 37743						728

REVISIONS

SYM	ZONE	DESCRIPTION						APPROVED
A		REVISED PER TDRR 20859						
B		REVISED PER TDRR 21340						
C		REVISED PER TDRR 23559						
D		REVISED PER TDRR 25773						
E		REVISED PER TDRR 26525						
F		REVISED PER TDRR 26873						
G		REVISED PER TDRR 28620						
H		REVISED PER TDRR 28863						
J		REVISED PER TDRR 29761						
K		REVISED PER TDRR 30064						
L		REVISED PER TDRR 30583						
M		REVISED PER TDRR 33116						
N		REVISED PER TDRR 33467						
P		REVISED PER TDRR 33543						
R		REVISED PER TDRR 33605						
S		REVISED PER TDRR 34140						
T		REVISED PER TDRR 34469						
U		REVISED PER TDRR 34917						
V		REVISED PER TDRR 35339						
W		REVISED PER TDRR 35649						

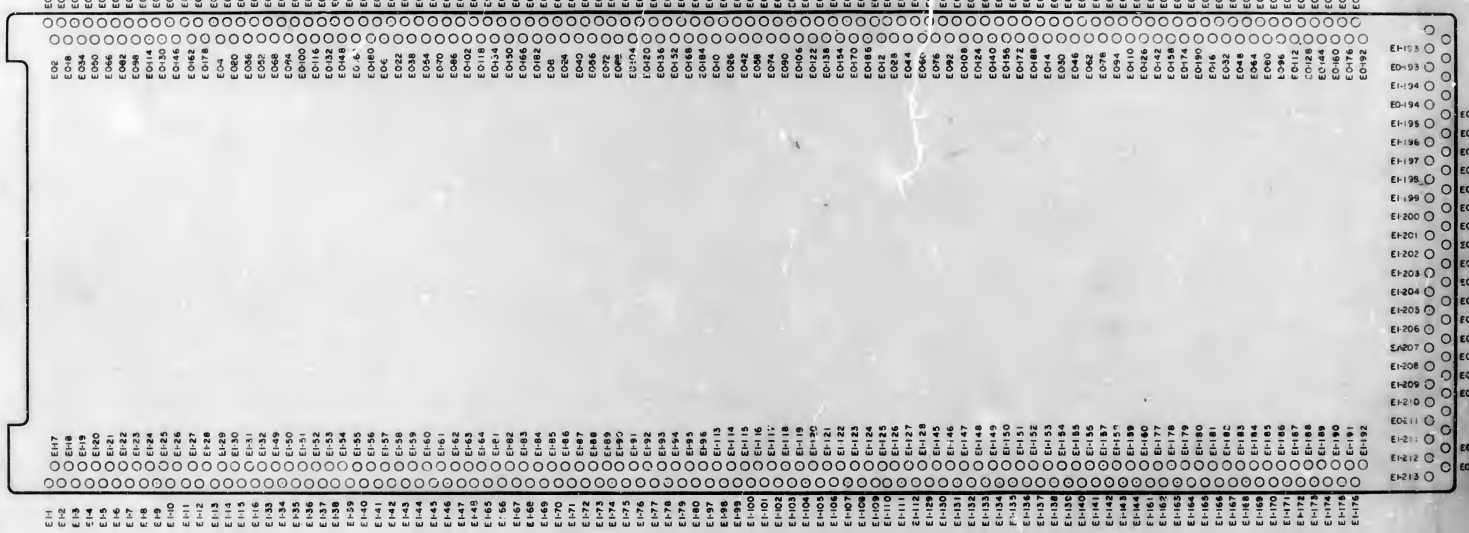

VIEW A-A

QTY REQD	PART OR IDENTIFYING NO	NOMENCLATURE OR DESCRIPTION	REF DES
		LIST OF MATERIALS	

UNLESS OTHERWISE SPECIFIED DIMENSIONS ARE IN INCHES
CAPACITOR VALUES ARE IN μf
RESISTOR VALUES ARE IN OHMS
TOLERANCES ON
FRACTIONS ± DECIMALS ± ANGLES ±
DO NOT SCALE THIS DRAWING
MATERIAL

NEXT ASSY | USED ON
APPLICATION

MIT INSTRUMENTATION LAB
CAMBRIDGE, MASS.

DRAWN
CHECKED
APPROVED
APPROVED MIT
APPROVED GSC

MANNED SPACECRAFT CENTER
HOUSTON, TEXAS

SENSE WIRING ASSY
SIDE B
FIXED MEMORY MODULE

CODE IDENT NO 80230 | SIZE E | DRAWING NO 2003061

SCALE 4/1 | SHEET 3 OF 3

REVISIONS 200 43						
SYM	ZONE	DESCRIPTION	DR	CHK	DATE	APPROVED
A		REVISED PER TDRR 20617				
B		REVISED PER TDRR 26199				

SECTION A-A

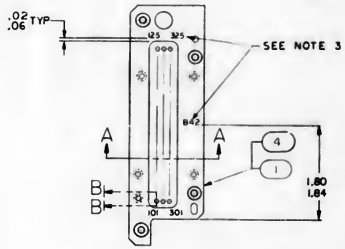

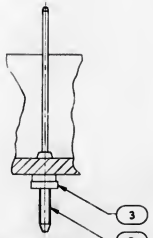

SECTION B-B
SCALE 4/1
ROTATED 90° CLOCKWISE

NOTES

1. INTERPRET DRAWING IN ACCORDANCE WITH STANDARDS PRESCRIBED BY MIL-D-70327
2. ASSEMBLE FIND NO. 2 AND FIND NO. 3 TO FIND NO. 1 OR FIND NO. 4 PER ND1002136
3. MARK .10/.08 HIGH BLACK CHARACTERS PER ND1002019 AND ND1002122 TYPE II CLASS 2 USING INK 1006271-10
4. IDENTIFY WITH PART NO. PER ND1002019

QTY REQD -021	QTY REQD -011	PART OR IDENTIFYING NO.	NOMENCLATURE OR DESCRIPTION	FIND NO.
1	—	2004701	CONNECTOR B42	4
75	75	1006775	INSULATOR, WRAPOST MALE	3
75	75	1006782-8	CONTACT, WRAPOST MALE	2
—	1	2004102-011	CONNECTOR B42	1

LIST OF MATERIALS

NEXT ASSY	USED ON
2003059	

APPLICATION

UNLESS OTHERWISE SPECIFIED DIMENSIONS ARE IN INCHES
CAPACITOR VALUES ARE IN μf
RESISTOR VALUES ARE IN OHMS
TOLERANCES ON
FRACTIONS DECIMALS ANGLES
± — ± — ± —
DO NOT SCALE THIS DRAWING

MATERIAL

MIT INSTRUMENTATION LAB
CAMBRIDGE, MASS.

DRAWN 5/19/65
CHECKED
APPROVED
APPROVED
APPROVED MIT
APPROVED MSC
DATE

MANNED SPACECRAFT CENTER
HOUSTON, TEXAS

CONNECTOR B42
SUBASSEMBLY
FIXED MEMORY

CODE IDENT NO 80230 | SIZE D | DRAWING NO. 2003064

SCALE 1/1 | SHEET 1 OF 1

REVISIONS 208 69

SYM	ZONE	DESCRIPTION	DR	CHK	DATE	APPROVED
A		REVISED PER TDRR 20617				
B		REVISED PER TDRR 26199				

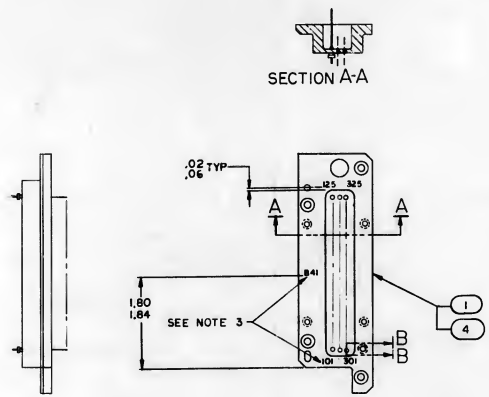

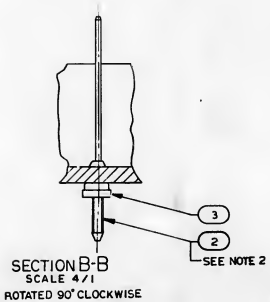

SECTION B-B
SCALE 4/1
ROTATED 90° CLOCKWISE

NOTES

1. INTERPRET DRAWING IN ACCORDANCE WITH STANDARDS PRESCRIBED BY MIL-D-70327
2. ASSEMBLE FIND NO.2 AND FIND NO.3 TO FIND NO.1 OR FIND NO.4 PER ND1002136
3. MARK .10/.08 HIGH BLACK CHARACTER PER ND1002019 AND ND1002122 TYPE II CLASS 2 USING INK 1006271-10
4. IDENTIFY WITH PART NO. PER ND1002019

QTY. REQD	QTY. REQD	PART OR IDENTIFYING NO.	NOMENCLATURE OR DESCRIPTION	FIND NO.
1	—	2004703	CONNECTOR B41	4
75	75	1006775	INSULATOR, WRAPOST MALE	3
75	75	1006782-8	CONTACT, WRAPOST MALE	2
—	1	2004101-011	CONNECTOR B41	1
-021	-011			

LIST OF MATERIALS

NEXT ASSY	USED ON
2003059	

APPLICATION

UNLESS OTHERWISE SPECIFIED DIMENSIONS ARE IN INCHES
CAPACITOR VALUES ARE IN μf
RESISTOR VALUES ARE IN OHMS
TOLERANCES ON
FRACTIONS DECIMALS ANGLES
± ± ± —
DO NOT SCALE THIS DRAWING

MATERIAL

MIT INSTRUMENTATION LAB
CAMBRIDGE, MASS.

MANNED SPACECRAFT CENTER
HOUSTON, TEXAS

DRAWN J.O. Sullivan 5 MAR 65
CHECKED 5 MAR 65
APPROVED 5 MAR 65
APPROVED 5 MAR 65
APPROVED MIT
APPROVED MSC
DATE

CONNECTOR B41
SUBASSEMBLY
FIXED MEMORY

CODE IDENT NO. 80230 | SIZE D | DRAWING NO. 2003065

SCALE 1/1 | SHEET | OF 1

REVISIONS					
SYM	ZONE	DESCRIPTION	DR	CHK	DATE	APPROVED
A		REVISED PER TORR 20850				
B		REVISED PER TORR 26309				
C		REVISED PER TORR 26199				
D		REVISED PER TORR 27741				

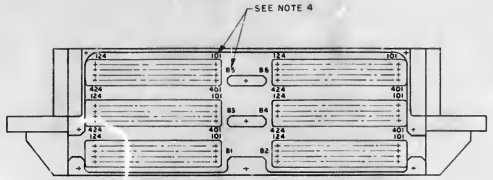

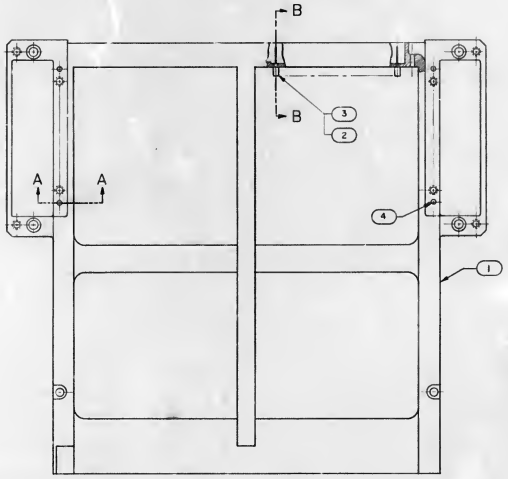

SECTION A-A
SCALE 2/1
4 PLACES

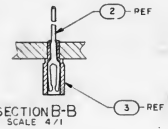

SECTION B-B
SCALE 4/1

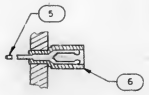

SECTION C-C
SCALE 4/1
6 PLACES

-021	1 THRU 6
-011	1 THRU 5
DASH NO.	APPLICABLE NOTES
NOTE APPLICATION	

NOTES

1. INTERPRET DRAWING IN ACCORDANCE WITH STANDARDS PRESCRIBED BY MIL-D-70327
2. ASSEMBLE FIND NO.2, FIND NO.3, FIND NO.5, & FIND NO.6 TO FIND NO.1 PER ND1002136
3. MARK .10 / .08 HIGH BLACK CHARACTERS PER ND1002019 AND ND1002122 TYPE II, CLASS 2 USING INK 1006271-11
4. MARK .08 / .06 HIGH BLACK CHARARACTERS PER ND1002019 AND ND1002122 TYPE II, CLASS 2 USING INK 1006271-11
5. IDENTIFY WITH PART NO. PER ND1002019
6. MARK BLACK AS SHOWN PER ND1002019 USING INK 1006271-11

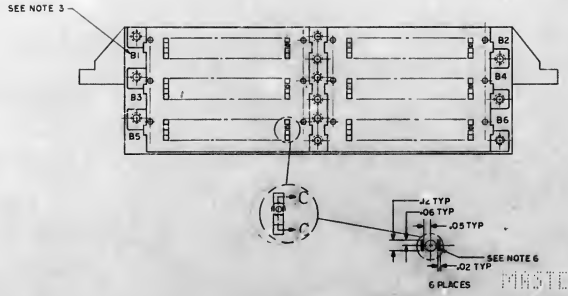

QTY REQD	QTY REQD	PART OR IDENTIFYING NO.	NOMENCLATURE OR DESCRIPTION	FIND NO.
6	—	1008819-003	SLEEVE, GROUNDING FEMALE	6
6	—	1008818-006	CONTACT ELECTRICAL, WRAPOST	5
4	4	MS16555-617	PIN, DOWEL	4
570	576	1006774	INSULATOR, WRAPOST FEMALE	3
570	576	1006781-2	CONTACT, WRAPOST FEMALE	2
1	1	2004133	INTERCONNECTION HEADER	1
-021	-011			

LIST OF MATERIALS

NEXT ASSY	USED ON
2003059	
APPLICATION	

UNLESS OTHERWISE SPECIFIED
DIMENSIONS ARE IN INCHES
CAPACITOR VALUES ARE IN µf
RESISTOR VALUES ARE IN OHMS
TOLERANCES ON
FRACTIONS DECIMALS ANGLES
± ±.02 ±
DO NOT SCALE THIS DRAWING
MATERIAL

MIT
INSTRUMENTATION LAB
CAMBRIDGE, MASS.

DRAWN
CHECKED
APPROVED
APPROVED
APPROVED MIT
APPROVED MSC
DATE

MANNED SPACECRAFT CENTER
HOUSTON TEXAS

INTERCONNECTION HEADER SUBASSEMBLY FIXED MEMORY

CODE IDENT NO.	SIZE	DRAWING NO.
80230	E	2003066
	SCALE 1/1	SHEET 1 OF 1

MASTER

SYM	ZONE	DESCRIPTION	CH	CHK	DATE	APPROVED
A		REVISED PER TORR 20865				

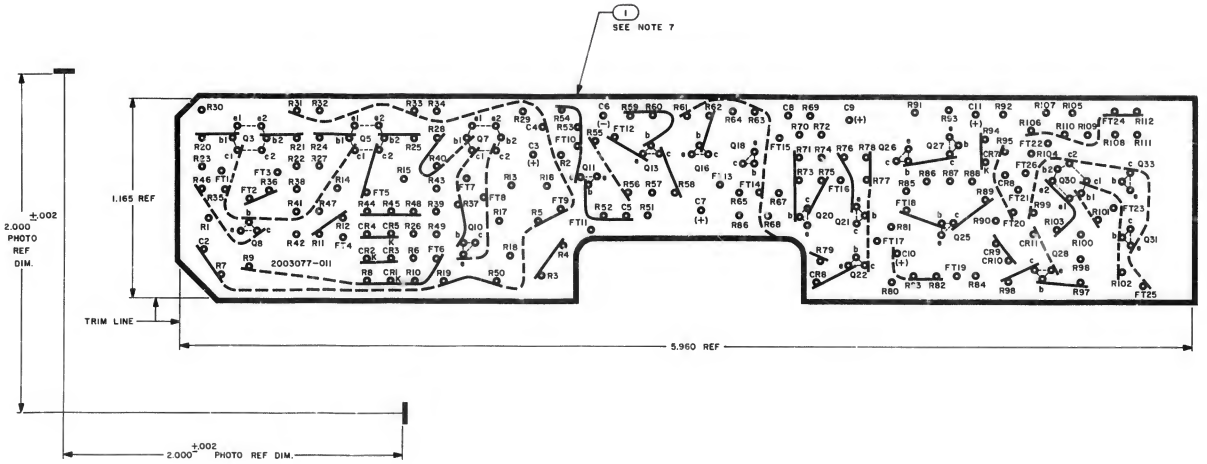

NOTES

1. INTERPRET DRAWING IN ACCORDANCE WITH STANDARDS PRESCRIBED BY MIL-D-70327
2. MATERIAL: FILM, .006/.008 THICK SENSITIZED DIMENSIONALLY STABLE PER L-F-340, TYPE IB, CLASS 2, STYLE IA
3. ORIGINAL OF THIS DRAWING OR REPRODUCTION MADE BY A PROCESS OR METHOD SHALL INSURE DIMENSIONAL STABILITY
4. MAKE MASTER PATTERN POSITIVE FILM TO DIMENSIONS SHOWN
5. BROKEN LINE DENOTES SLEEVING
6. CUT TO WITHIN .010 OF TRIM LINE
7. APPLY FIND NO. 2 TO FARSIDE OF FIND NO. 1
8. ⊙ .040/.050 DIA HOLE
9. AR DENOTES AS REQUIRED

QTY REQD	PART OR IDENTIFYING NO	NOMENCLATURE OR DESCRIPTION	FIND NO
AR	1006318	ADHESIVE	2
1	2003077-001	INSULATOR	1

-011 LIST OF MATERIALS

MIT INSTRUMENTATION LAB CAMBRIDGE MASS

MANNED SPACECRAFT CENTER HOUSTON TEXAS

INSULATOR B ASSEMBLY PHOTOGRAPHIC MASTER ALARM MODULE

DRAWN Ed Pacuna
CHECKED
APPROVED
APPROVED
APPROVED MIT
APPROVED MSC

CODE IDENT NO 80230 | SIZE E | DRAWING NO 2003077

SCALE 4/1 | DATE | SHEET 1 OF 1

UNLESS OTHERWISE SPECIFIED DIMENSIONS ARE IN INCHES CAPACITOR VALUES ARE IN μf RESISTOR VALUES ARE IN OHMS TOLERANCES ON FRACTIONS ± DECIMALS ± ANGLES ± DO NOT SCALE THIS DRAWING

MATERIAL SEE NOTE 2

NEXT ASSY 2003089 | USED ON

APPLICATION

REVISIONS 21166

SYM	ZONE	DESCRIPTION	DR	CHK	DATE	APPROVED
A		REVISED PER TDRR 22149			3 SEPT 65	

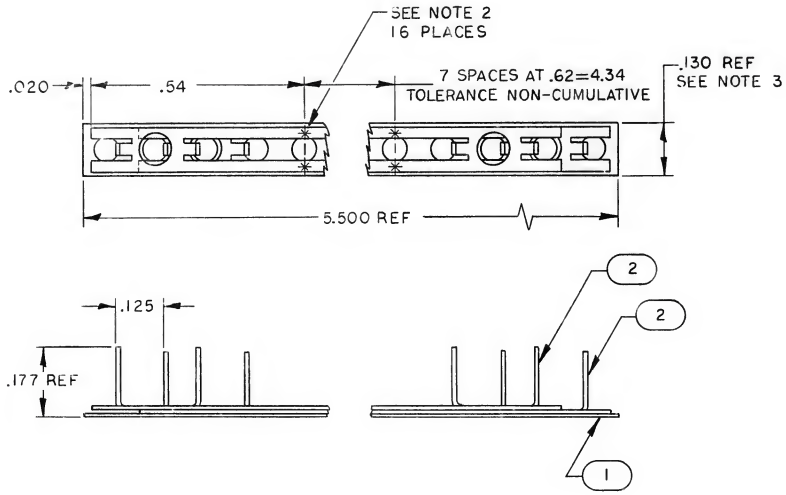

NOTES
1. INTERPRET DRAWING IN ACCORDANCE WITH STANDARDS PRESCRIBED BY MIL-D-70327
2. WELD PER ND1002005
3. FIND NO. 2 TO BE SYMMETRICAL WITH FIND NO. 1 WITHIN .010
4. BOND FIND NO. 2 TO FIND NO. 1 PER ND1002187
5. IDENTIFY WITH PART NO. PER ND1002019

QTY REQD	PART OR IDENTIFYING NO.	NOMENCLATURE OR DESCRIPTION	FIND NO.
2	2004140-002	BUS STRIP	2
1	2004143-001	INSULATOR	1
-011			

LIST OF MATERIALS

NEXT ASSY	USED ON
2003074	

APPLICATION

UNLESS OTHERWISE SPECIFIED
DIMENSIONS ARE IN INCHES
CAPACITOR VALUES ARE IN μf
RESISTOR VALUES ARE IN OHMS
TOLERANCES ON
FRACTIONS ± — DECIMALS .XX ±.06 .XXX ±.005 ANGLES ± —
DO NOT SCALE THIS DRAWING

MATERIAL —

MIT INSTRUMENTATION LAB
CAMBRIDGE, MASS.

DRAWN E. W. Johnson 6/3/65
CHECKED R. Lindstrom 23 Sep 65
APPROVED
APPROVED Elden C. Hall LTD
APPROVED MIT W. R. Ragan 27 Sep 65
APPROVED MSC C. M. Ma 7/23/64
DATE

MANNED SPACECRAFT CENTER
HOUSTON, TEXAS

BUS STRIP ASSEMBLY

CODE IDENT NO.	SIZE	DRAWING NO.
80230	C	2003080

SCALE 5/1 SHEET 1 OF 1

REVISIONS

SYM	ZONE	DESCRIPTION	DR	CHK	DATE	APPROVED
A		REVISED PER TDRR 22151	LAL	LB	3 Sep 65	

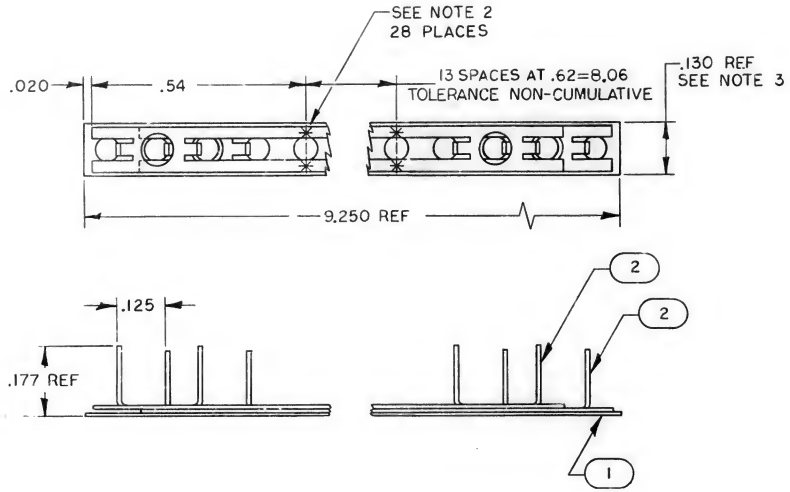

NOTES
1. INTERPRET DRAWING IN ACCORDANCE WITH STANDARDS PRESCRIBED BY MIL-D-70327
2. WELD PER ND1002005
3. FIND NO. 2 TO BE SYMMETRICAL WITH FIND NO. 1 WITHIN .010
4. BOND FIND NO.2 TO FIND NO. 1 PER ND1002187
5. IDENTIFY WITH PART NO PER ND 1002019

QTY REQD	PART OR IDENTIFYING NO.	NOMENCLATURE OR DESCRIPTION	FIND NO.
2	2004140-001	BUS STRIP	2
1	2004143-002	INSULATOR	1
-011		LIST OF MATERIALS	

NEXT ASSY	USED ON
2003074	

APPLICATION

UNLESS OTHERWISE SPECIFIED
DIMENSIONS ARE IN INCHES
CAPACITOR VALUES ARE IN μf
RESISTOR VALUES ARE IN OHMS
TOLERANCES ON
FRACTIONS ± — DECIMALS .XX ±.06 .XXX ±.005 ANGLES ± —
DO NOT SCALE THIS DRAWING

MATERIAL

MIT INSTRUMENTATION LAB
CAMBRIDGE, MASS.

MANNED SPACECRAFT CENTER
HOUSTON, TEXAS

DRAWN 6/3/65
CHECKED 6/3/65
APPROVED
APPROVED 30 Jul 65
APPROVED MIT 7/26/65
APPROVED MSC 7/26/65
DATE

BUS STRIP ASSEMBLY

CODE IDENT NO. 80230
SIZE C
DRAWING NO. 2003081
SCALE 5/1
SHEET 1 OF 1

REVISIONS 22777						
SYM	ZONE	DESCRIPTION	BY	CHK	DATE	APPROVED
A		REVISED PER TDRR 23136				
B		REVISED PER TDRR 24193				
C		REVISED PER TDRR 24266				
D		REVISED PER TDRR 25030				
E		REVISED PER TDRR 25339				
F		REVISED PER TDRR 25309				

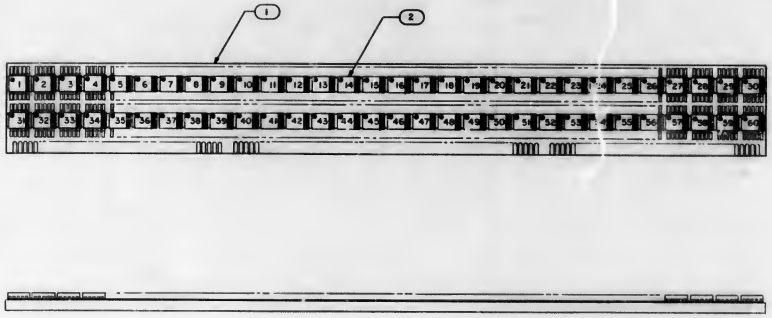

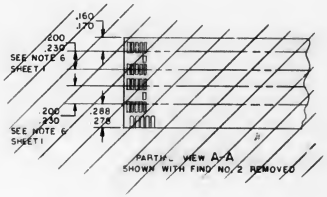

NOTE:

1. INTERPRET DRAWING IN ACCORDANCE WITH STANDARDS PRESCRIBED BY MIL-D-70327
2. ~~APPLY FIND NO. 3 TO FIND NO. 1 IN AREA INDICATED~~
3. WELD PER ND1002226
4. IDENTIFY WITH PART NO. PER ND1002019
5. ⊠ SYMBOL SIGNIFIES OMISSION OF FIND NO. 2 AND FIND NO. 6 IN POSITION INDICATED SEE TABLE, SHEET 2
6. ~~COVER INDICATED AREA WITH .005 MINIMUM THICKNESS PER ND1002006 TYPE 3E~~
7. ~~BOND FIND 2 TO FIND 1 USING ADHESIVE 1006341~~
8. △ SEE TABLE, SHEET 2
9. APPLY FIND NO. 6 TO FIND NO. 1

AR	2003989	TAPE ADHESIVE		6
AR	1006806-17	INSULATION TAPE, ELECTRICAL		5
AR	1006776-22	SLEEVING, INSULATION		4
~~AR~~	~~1008306-5~~	~~INSULATION TAPE, ELECTRICAL (ADHESIVE)~~		~~3~~
△	1004301-001	DUAL NOR GATE		2
△	SEE TABLE SH 2	PRINTED CIRCUIT BOARD		1
QTY REQD	PART OR IDENTIFYING NO.	NOMENCLATURE OR DESCRIPTION		FIND NO.

LIST OF MATERIALS

2003120		UNLESS OTHERWISE SPECIFIED DIMENSIONS ARE IN INCHES CAPACITOR VALUES ARE IN μf RESISTOR VALUES ARE IN OHMS TOLERANCES ON FRACTIONS ± DECIMALS ± ANGLES ± DO NOT SCALE THIS DRAWING MATERIAL	MIT INSTRUMENTATION LAB CAMBRIDGE, MASS.
NEXT ASSY	USED ON		
APPLICATION			

MANNED SPACECRAFT CENTER
HOUSTON, TEXAS

DRAWN D. Hayward
CHECKED
APPROVED
APPROVED MIT
MIT NOT REQUIRED PER LETTER

CIRCUIT BOARD ASSEMBLY (TABULATED)

CODE IDENT NO. 80230 | SIZE E | DRAWING NO. 2003083

SCALE 2/1 | SHEET 1 OF 5

REVISIONS 2277					
SYM	ZONE	DESCRIPTION	DR	CHK	DATE	APPROVED
A		REVISED PER TDRA 23136				
B		REVISED PER TDRA 24193				
C		REVISED PER TDRA 24266				
D		REVISED PER TDRA 23030				
E		REVISED PER TDRA 26339				
F		REVISED PER TDRA 25909				

(1) REF (2) REF

1	2	3	4	5	6	7	8	9	10	11	12	13	14	15	16	17	18	19	20	21	22	23	24	25	26	27	28	29	30
31	32	33	34	35	36	37	38	39	40	41	42	43	44	45	46	47	48	49	50	51	52	53	54	55	56	57	58	59	60

FIND NO.	MODULE NO. (REF)	POSITION NUMBER (FIND NO.2 AND FIND NO.6)	QUANTITY OF FIND NO.2	ASSEMBLY PART NO.	
1010985-001	A1 SH 1	1, 60	58	2003083-011	
-002	A1 SH 2	1, 60	58	-021	
-003	A2 SH 1,2		60	-031	
-004	A2 SH 3		60	-041	
-005	A3 SH 1	36, 39, 48	57	-051	
-006	A3 SH 2	1	59	-061	
-007	A4 SH 1		60	-071	
-008	A4 SH 2	38	59	-081	
-009	A5 SH 1	42, 52, 60	55	-091	
-010	A5 SH 2	2, 35, 59, 60	56	-111	
SEE SHEET 3 -011	A6 SH 1	44, 60	58	-121	SEE SHEET 3
-012	A6 SH 2			-131	
-013	A7 SH 1		60	-141	
-014	A7 SH 2		60	-151	
-015	A8-11 SH 1		60	-161	
-016	A8-11 SH 2		60	-171	
-023	A12 SH 1			-251	
-024	A12 SH 2		60	-261	
-025	A13 SH 1	1, 2, 35, 36, 48, 49	54	-271	
-027	A14 SH 1	1	59	-291	
-029	A14 SH 2	1	59	-311	
-029	A15 SH 1	52, 53, 54	57	-321	
-030	A15 SH 2		60	-331	
-031	A16 SH 1		60	-341	
-032	A16 SH 2		60	-351	
-033	A17 SH 1		60	-361	
-034	A17 SH 2		60	-371	
-035	A18 SH 1		60	-381	
-036	A18 SH 2		60	-391	
-037	A19 SH 1		60	-411	
-038	A19 SH 2	39	59	-421	
-039	A20 SH 1		60	-431	
-040	A20 SH 2		60	-441	
-041	A21 SH 1,2			-451	
-042	A21 SH 3		60	-461	
-043	A22 SH 1		60	-471	
-044	A22 SH 2		60	-481	
-045	A23 SH 1	39	59	-491	
-046	A23 SH 2	60	59	-511	
-047	A24 SH 1	1	59	-521	
-048	A24 SH 2	50, 51, 52, 53, 54, 55, 57, 58, 59, 60	52	-531	
-049	A12 SH 1	45, 46	58	-541	
-050	A21 SH 1,2	1, 60	57	-551	
1010985-051	A6 SH 2	1, 37, 42, 43, 44, 53, 55, 57, 59, 60	51	2003083-561	

QTY REQD	PART OR IDENTIFYING NO.	NOMENCLATURE OR DESCRIPTION	FIND NO.
		LIST OF MATERIALS	

UNLESS OTHERWISE SPECIFIED DIMENSIONS ARE IN INCHES
CAPACITOR VALUES ARE IN μf
RESISTOR VALUES ARE IN OHMS
TOLERANCES ON
FRACTIONAL DECIMALS ANGLES
± ± ± ±
DO NOT SCALE THIS DRAWING

MATERIAL

NEXT ASSY | USED ON
APPLICATION

MIT INSTRUMENTATION LAB CAMBRIDGE, MASS.

MANNED SPACECRAFT CENTER HOUSTON, TEXAS

DRAWN
CHECKED
APPROVED
APPROVED

CIRCUIT BOARD ASSEMBLY (TABULATED)

APPROVED MIT NOV REQUIREMENTS
DATE
CODE IDENT NO. 80230 | SIZE E | DRAWING NO. 2003083
SCALE
SHEET 2 OF 3

REVISIONS						
SYM	ZONE	DESCRIPTION	DR	CHK	DATE	APPROVED
E		THIS SHEET ADDED PER TDRR 25339				
F		REVISED PER TDRR 25509				

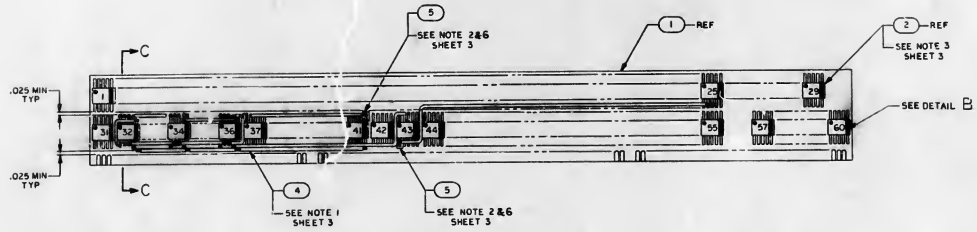

-121 ASSEMBLY

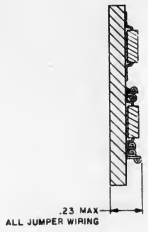

SECTION C-C
SCALE 4/1

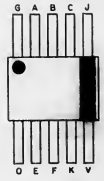

DETAIL B
SCALE 8/1
NOR GATE LEAD
DESIGNATION TYPICAL

-121 NOTES

1. JUMPER MATERIAL TO BE UNPLATED NICKEL WIRE .0159 ±.0005 DIA PER ND1015400
2. COMPLETELY COVER PAD J OF GATE 41 & PAD D OF GATE 43 USING FIND NO.5
3. WELD FIND NO. 2 TO FIND NO.1 PER ND1002256, EXCEPT PAD J OF GATE 41 & PAD D OF GATE 43
4. WELD JUMPER WIRE TO FIND NO.2 PER ND1002005, AS FOLLOWS:
   (A) CONNECT LEADS G,A, & B TOGETHER IN GATE 32
   (B) CONNECT LEADS G,A, & B TOGETHER IN GATE 34
   (C) CONNECT LEADS G,A, & B TOGETHER IN GATE 36
   (D) CONNECT LEAD C OF GATE 34 TO LEAD J OF GATE 36
   (E) CONNECT LEAD C OF GATE 36 TO LEAD J OF GATE 41
   (F) CONNECT LEADS E & F OF GATE 32 TO LEADS E & F OF GATE 34 TO LEADS E & F OF GATE 36 TO LEADS G OF GATE 37
   (G) CONNECT LEAD D OF GATE 32 TO LEAD J OF GATE 32
   (H) CONNECT LEAD C OF GATE 32 TO LEAD J OF GATE 34
   (J) CONNECT LEAD K OF GATE 32 TO LEAD D OF GATE 34
   (K) CONNECT LEAD K OF GATE 34 TO LEAD D OF GATE 36
   (L) CONNECT LEAD K OF GATE 36 TO LEAD B OF GATE 43
   (M) CONNECT LEAD D OF GATE 43 TO LEAD E OF GATE 25
   (N) CONNECT LEAD V OF GATE 32 TO LEAD V OF GATE 34 TO LEAD V OF GATE 36 TO LEAD V OF GATE 41
5. THE FOLLOWING LEADS ARE TO BE BONDED IN INTIMATE CONTACT WITH THEIR CORRESPONDING PADS PER ND1002004 TYPE X
   GATE 32 LEADS C,J, & G
   GATE 34 LEADS C & J
   GATE 36 LEADS C & J
6. BOND LEAD J OF GATE 41 & LEAD D OF GATE 43 TO CORRESPONDING PADS OF FIND NO. 1 AFTER ASSEMBLY OF FIND NO. 5 PER ND1002004 TYPE X

(E) THIS SHEET ADDED

QTY REQD	PART OR IDENTIFYING NO.	NOMENCLATURE OR DESCRIPTION	FIND NO.
		LIST OF MATERIALS	

UNLESS OTHERWISE SPECIFIED DIMENSIONS ARE IN INCHES
TOLERANCES ON
FRACT ±/16 DECIMALS ± ANGLES ±
DO NOT SCALE THIS DRAWING
MATERIAL
HEAT TREATMENT
FINAL FINISH
NEXT ASSY | USED ON
APPLICATION

M.I.T. INSTRUMENTATION LAB
Cambridge, Mass.
DR. M. DATE
DRAWN
CHECKED 11-30-66
APPROVAL
APPROVAL
NASA APPROVAL A. C. McKINNON
MIT APPROVAL

MANNED SPACECRAFT CENTER
HOUSTON, TEXAS

CIRCUIT BOARD ASSEMBLY
(TABULATED)

CODE IDENT NO. 80830 | SIZE E | NASA DRAWING NO. 2003083
SCALE 2/1 | WT | SHEET 3 OF 3

REVISIONS						
SYM	ZONE	DESCRIPTION	DR	CHK	DATE	APPROVED
A		REVISED PER TDRR 27308				
B		REVISED PER TDRR 27740				

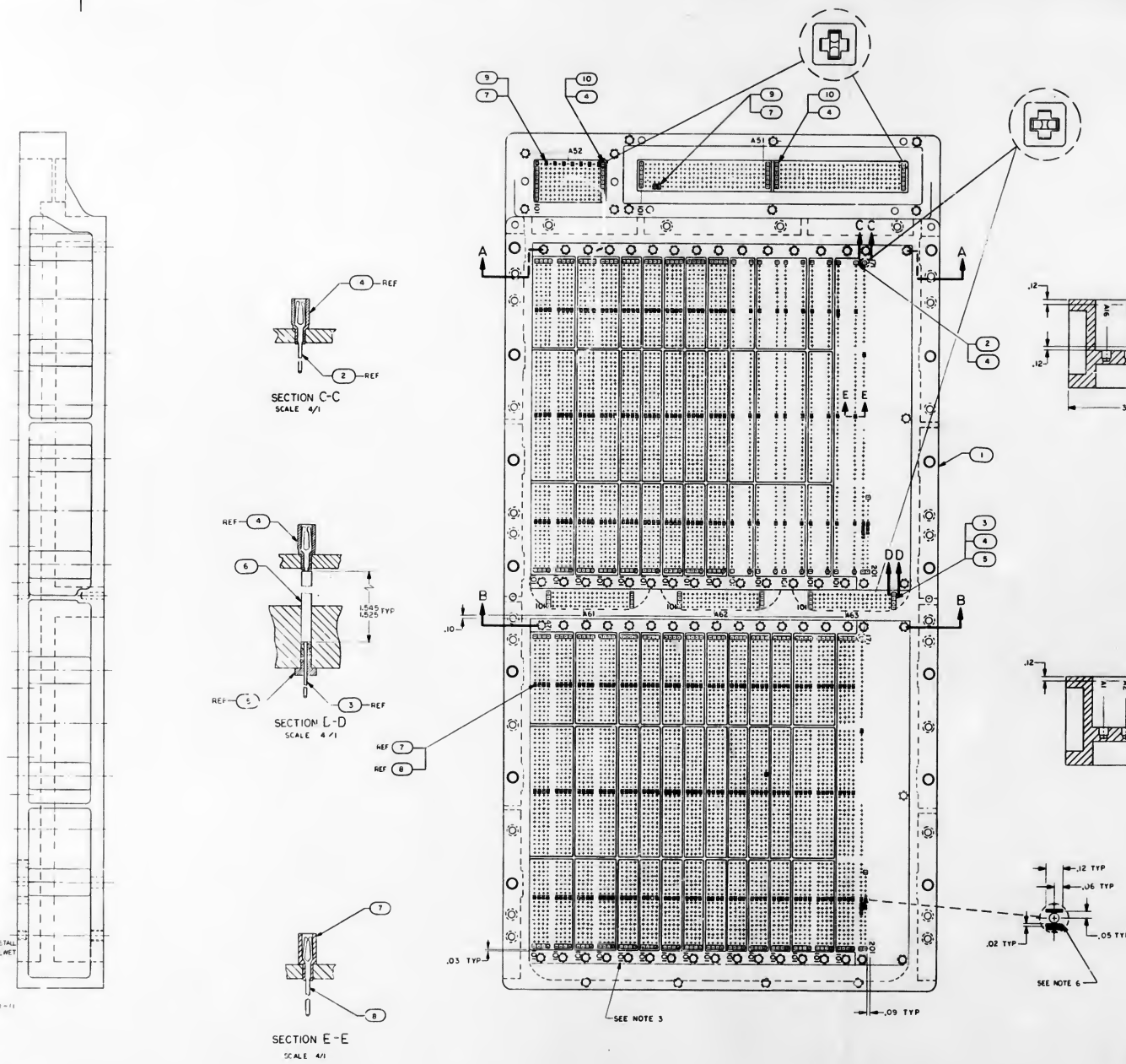

QTY REQD	PART OR IDENTIFYING NO	NOMENCLATURE OR DESCRIPTION	FIND NO
494	1006781-7	CONTACT, WRAPOST, FEMALE, MINIATURE	10
10	1008818-003	CONTACT, ELECTRICAL - WRAPOST	9
365	1008818-002	CONTACT, ELECTRICAL-WRAPOST	8
175	1008819-002	SLEEVE, GROUNDING FEMALE	7
AR	1006776-20	INSULATION, SLEEVING	6
240	2004127	BUSHING	5
7837	1006774	INSULATOR, WRAPOST, FEMALE, MINIAT	4
240	1006781-5	CONTACT, WRAPOST, FEMALE, MINIAT	3
7105	1006781-3	CONTACT, WRAPOST, FEMALE, MINIAT	2
1	2004166	TRAY A	1

-011 LIST OF MATERIALS

UNLESS OTHERWISE SPECIFIED DIMENSIONS ARE IN INCHES CAPACITOR VALUES ARE IN μf RESISTOR VALUES ARE IN OHMS TOLERANCES ON FRACTIONS ± DECIMALS ±.02 ANGLES ± DO NOT SCALE THIS DRAWING MATERIAL

MIT INSTRUMENTATION LAB CAMBRIDGE MASS

MANNED SPACECRAFT CENTER HOUSTON, TEXAS

DRAWN CHECKED APPROVED APPROVED MIT APPROVED NASA

TRAY A SUBASSEMBLY AGC

CODE IDENT NO 80230 SIZE J DRAWING NO 2003090

SCALE 1/1 SHEET OF 1

2003092 NEXT ASSY USED ON APPLICATION

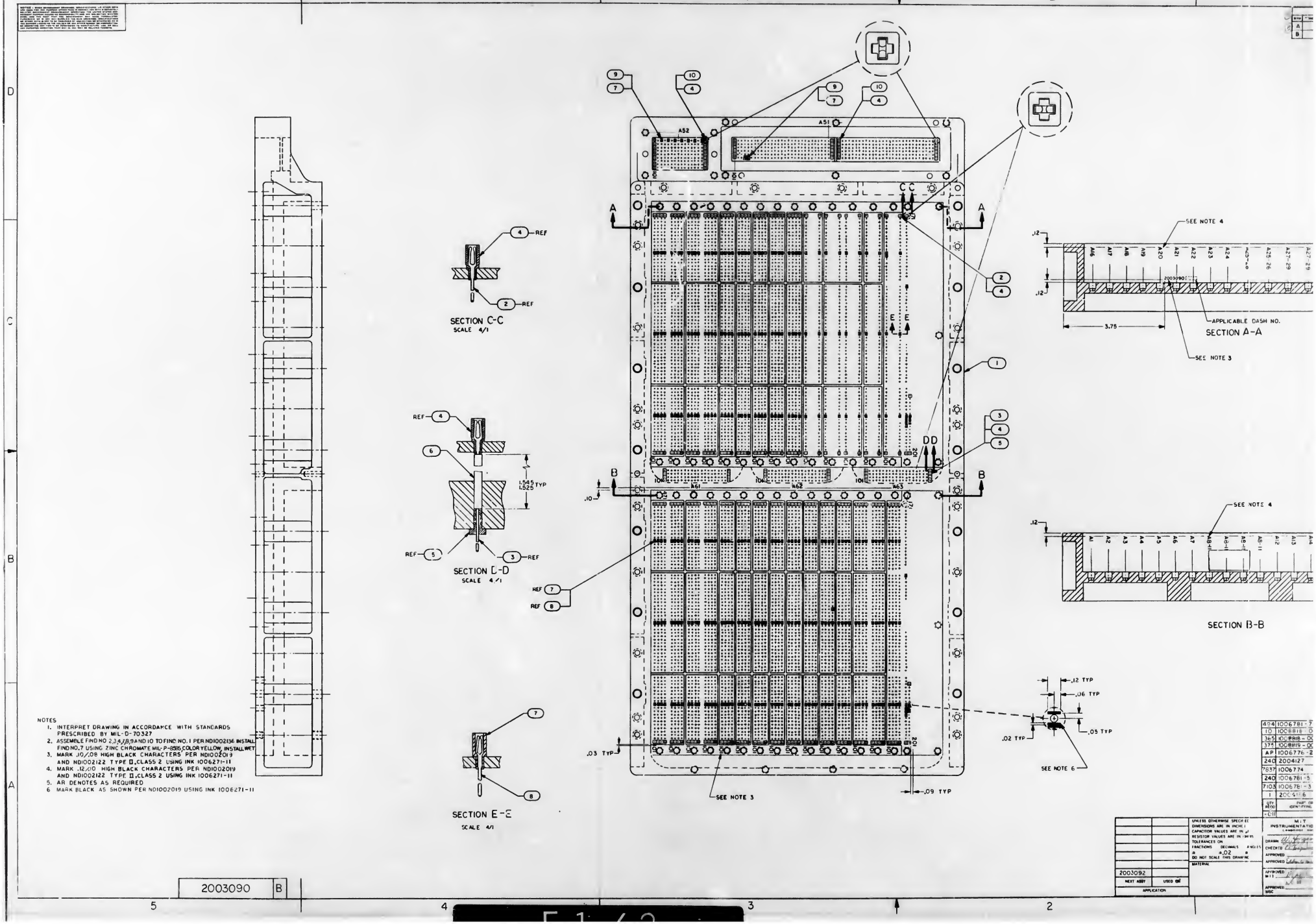
SECTION C-C
SCALE 4/1
SECTION D-D
SCALE 4/1
SECTION E-E
SCALE 4/1
SEE NOTE 4
APPLICABLE DASH NO.
SEE NOTE 3
SECTION A-A
SECTION B-B
SEE NOTE 6
SEE NOTE 3
.12 TYP
.06 TYP
.05 TYP
.02 TYP
.03 TYP
.09 TYP
.10
3.75
1.545
1.525 TYP
REF
A51
A52
A61
A62
A63
NOTES
1. INTERPRET DRAWING IN ACCORDANCE WITH STANDARDS PRESCRIBED BY MIL-D-70327
2. ASSEMBLE FIND NO 2,3,4,7,8 AND 10 TO FIND NO. 1 PER ND1002136 INSTALL FIND NO.7 USING ZINC CHROMATE MIL-P-8585, COLOR YELLOW, INSTALL WET
3. MARK .10/.08 HIGH BLACK CHARACTERS PER ND1002019 AND ND1002122 TYPE II, CLASS 2 USING INK 1006271-11
4. MARK .12/.10 HIGH BLACK CHARACTERS PER ND1002019 AND ND1002122 TYPE II, CLASS 2 USING INK 1006271-11
5. AR DENOTES AS REQUIRED
6 MARK BLACK AS SHOWN PER ND1002019 USING INK 1006271-11
2003090 B
2003092
NEXT ASSY
USED ON
APPLICATION
UNLESS OTHERWISE SPECIFIED DIMENSIONS ARE IN INCHES
CAPACITOR VALUES ARE IN μf
RESISTOR VALUES ARE IN OHMS
TOLERANCES ON
FRACTIONS DECIMALS ANGLES
± ±.02 ±
DO NOT SCALE THIS DRAWING
MATERIAL
M.I.T. INSTRUMENTATION LABORATORY
DRAWN
CHECKED
APPROVED
APPROVED M.I.T.
APPROVED MSC
404 1006781-7
10 1006818-0
365 1008818-0
375 1008819-0
AP 1006776-2
240 2004127
7637 1006774
240 1006781-5
7103 1006776-3
1 2004116
QTY REQD
PART OR IDENTIFYING
-011

REVISIONS					
SYM	ZONE	DESCRIPTION	DR	CHK	DATE	APPROVED
A		REVISED PER TDRR 27308				
B		REVISED PER TDRR 27140				

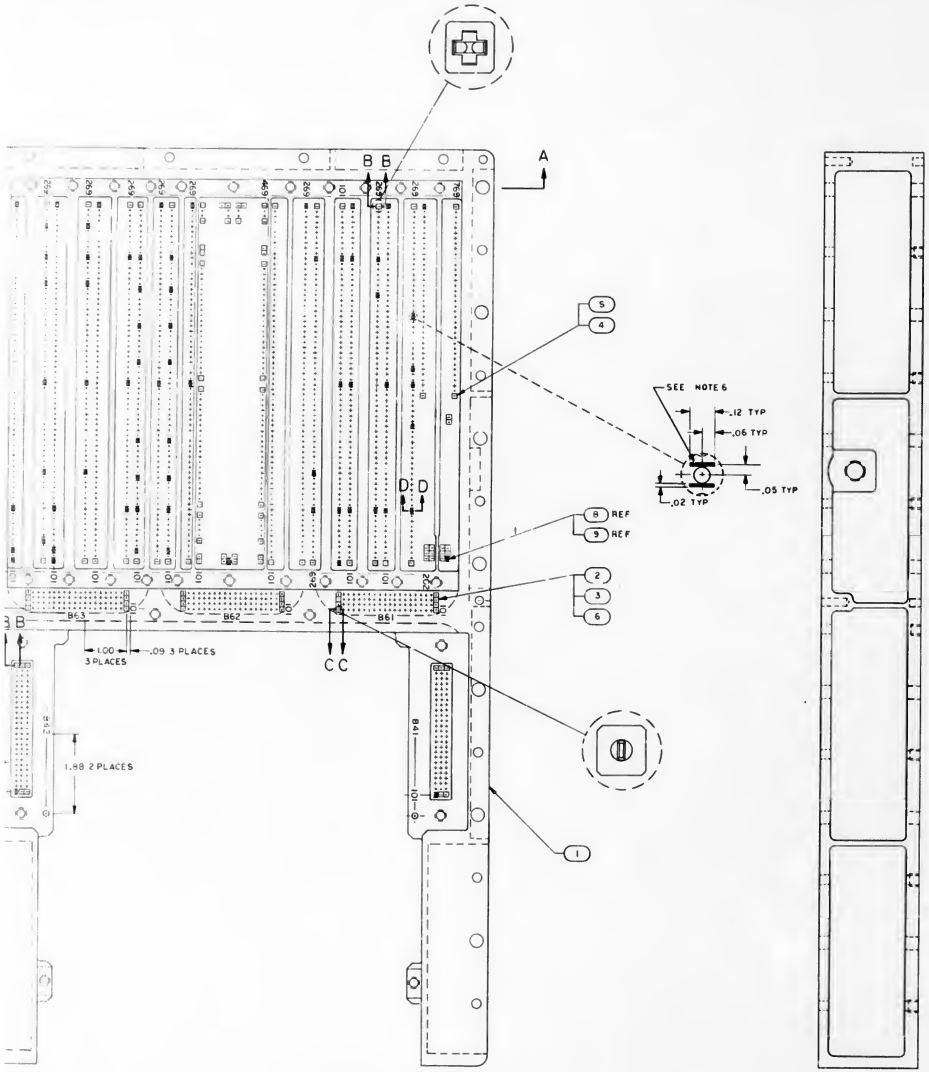

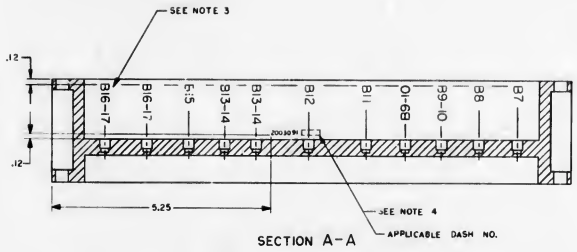

SECTION A-A

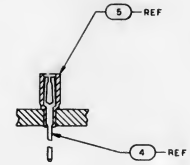

SECTION B-B
SCALE 4/1

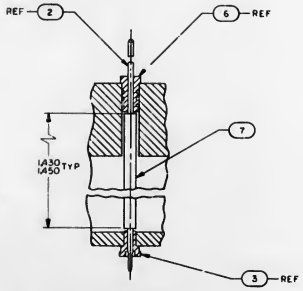

SECTION C-C
SCALE 4/1

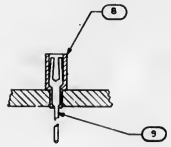

SECTION D-D
SCALE 4/1

QTY REQD	PART OR IDENTIFYING NO	NOMENCLATURE OR DESCRIPTION	FIND NO
71	1008818-002	CONTACT, ELECTRICAL WRAPOST	9
71	1008819-002	SLEEVE, GROUNDING FEMALE	8
AR	1006776-20	INSULATION SLEEVING	7
240	2004127	BUSHING	6
544	1006774	INSULATOR, WRAPOST, FEMALE, MIN	5
544	1006781-3	CONTACT, WRAPOST, FEMALE, MIN	4
240	1006775	INSULATOR, WRAPOST, MALE, MIN	3
240	1006782-9	CONTACT, WRAPOST, MALE, MIN	2
1	2004167	TRAY B	1

-011 LIST OF MATERIALS

MIT INSTRUMENTATION LAB CAMBRIDGE MASS	MANNED SPACECRAFT CENTER HOUSTON, TEXAS
DRAWN / CHECKED / APPROVED / APPROVED	TRAY B SUBASSEMBLY AGC
APPROVED MIT / APPROVED NSC	CODE IDENT NO 80230 · SIZE J · DRAWING NO 2003091
	SCALE 1/1 · SHEET 1 OF 1

UNLESS OTHERWISE SPECIFIED DIMENSIONS ARE IN INCHES
CAPACITOR VALUES ARE IN μf
RESISTOR VALUES ARE IN OHMS
TOLERANCES ON
FRACTIONS DECIMALS ANGLES
± ±.02 ±
DO NOT SCALE THIS DRAWING
MATERIAL

2003093
NEXT ASSY | USED ON
APPLICATION

2003091 B

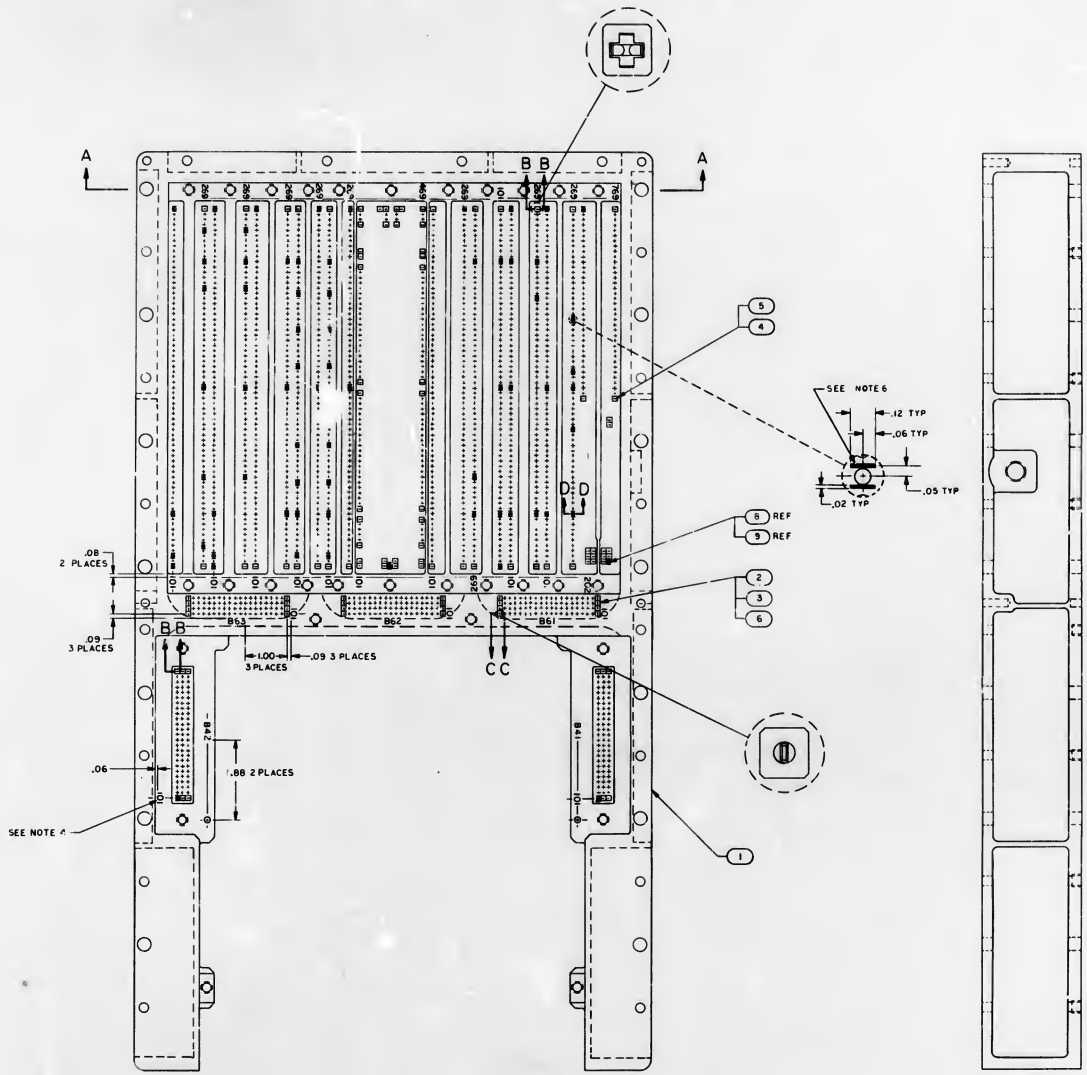

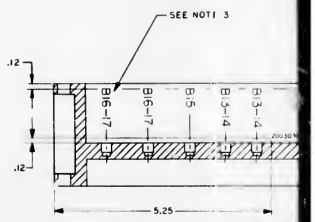

SECTI

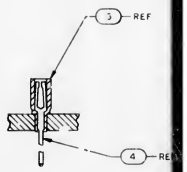

SECTION B-B
SCALE 4/1

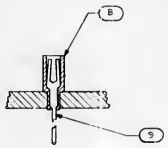

SECTION D-D
SCALE 4/1

NOTES

1. INTERPRET DRAWING IN ACCORDANCE WITH STANDARDS PRESCRIBED BY MIL-D-70327
2. ASSEMBLE FIND NO. 2,3,4,5,8 AND 9 TO FIND NO. 1 PER ND1002136, INSTALL FIND NO. 8 USING ZINC CHROMATE, MIL-P-8585 COLOR YELLOW, INSTALL WET
3. MARK .17/.19 HIGH BLACK CHARACTERS PER ND1002019 AND ND1002122, TYPE II, CLASS 2, USING INK 1006271-11
4. MARK .10/.08 HIGH BLACK CHARACTERS PER ND1002019 AND ND1002122, TYPE II, CLASS 2, USING INK 1006271-11
5. AR DENOTES AS REQUIRED
6. MARK BLACK AS SHOWN PER ND1002019 USING INK 1006271-11

2003091 B

REVISIONS 72RR 72543					
SYM	ZONE	DESCRIPTION	DR	CHK	DATE	APPROVED

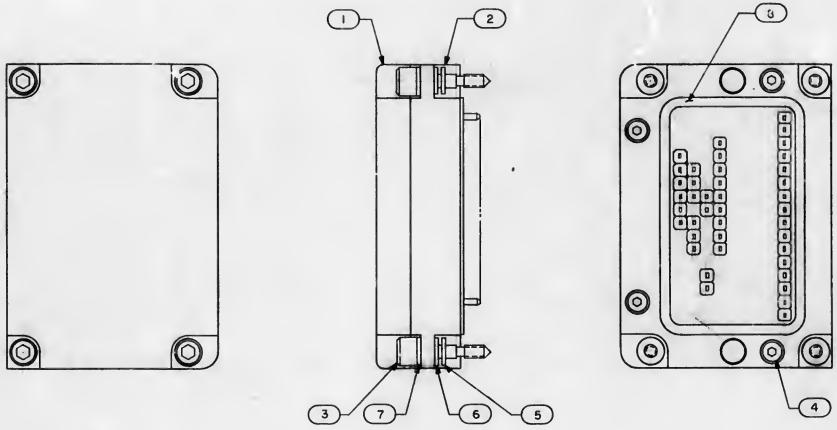

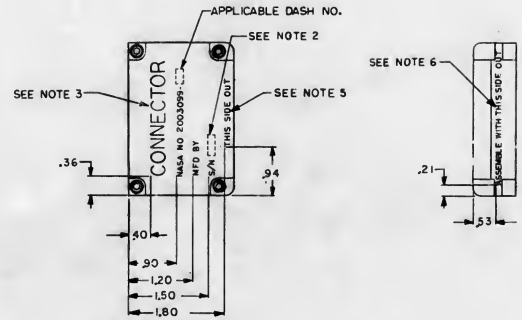

MARKING VIEW
SCALE 1/1

NOTES:

1. INTERPRET DRAWING IN ACCORDANCE WITH STANDARDS PRESCRIBED BY MIL-D-1000
2. MARK .10/.08 HIGH WHITE CHARACTERS PER ND1002019 AND ND1002122 TYPE II CLASS 2 USING INK 1006271-1, SERIALIZE PER ND 1002023
3. MARK .26/.24 HIGH WHITE CHARACTERS PER ND1002019 AND ND1002122 TYPE II CLASS 2 USING INK 1006271-1
4. MOUNTING TORQUE OF FIND NO. 4 TO BE 4 TO 6 INCH LBS.
5. MARK .10/.08 HIGH RED CHARACTERS PER ND1002019 AND ND1002122 TYPE II CLASS 2 USING INK 1006271-9
6. MARK .10/.08 HIGH RED CHARACTERS PER ND1002019 AND ND1002122 TYPE II CLASS 1 USING INK 1006271-9

QTY REQD	PART OR IDENTIFYING NO.	MATERIAL OR NOTES	NOMENCLATURE OR DESCRIPTION	FIND NO.
1	2004727		GASKET, RUBBER	8
4	2004984-001		WASHER, FLAT	7
4	2004984-003		WASHER, FLAT	6
4	MS16633-4015		RING, RETAINING, EXTERNAL, E	5
4	MS16995-10	NOTE 4	SCREW, CAP, SOCKET HD.	4
4	1004579-1		SCREW, JACKING	3
1	2003095		FRAME ASSEMBLY	2
1	2004188		COVER	1

-011 LIST OF MATERIALS

NEXT ASSY	USED ON
2003993	
2003999	

APPLICATION

UNLESS OTHERWISE SPECIFIED DIMENSIONS ARE IN INCHES
CAPACITOR VALUES ARE IN μf
RESISTOR VALUES ARE IN OHMS
TOLERANCES ON
FRACTIONS ± DECIMALS ±.02 ANGLES ±
DO NOT SCALE THIS DRAWING

MATERIAL

MIT INSTRUMENTATION LAB
CAMBRIDGE, MASS

MANNED SPACECRAFT CENTER
HOUSTON, TEXAS

DRAWN F. BYRNE 8/26/66
CHECKED Bonarrigo 8/26/66
APPROVED
APPROVED CCB
APPROVED MSC
DATE

CONNECTOR ASSEMBLY

CODE IDENT NO.	SIZE	DRAWING NO.
80230	D	2003099

SCALE 2/1 SHEET 1 OF 1

2003099-1

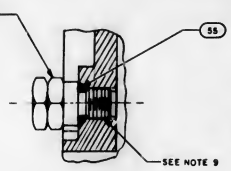

PARTIAL SECTION F F
SCALE: 2/1

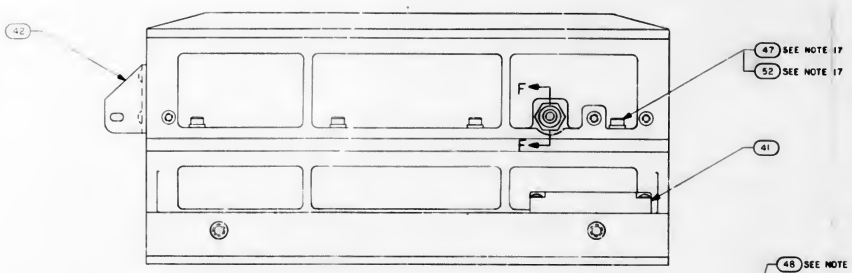

VIEW B-B

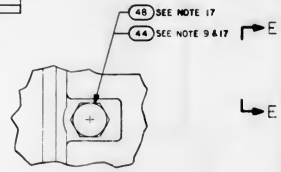

VIEW E-E

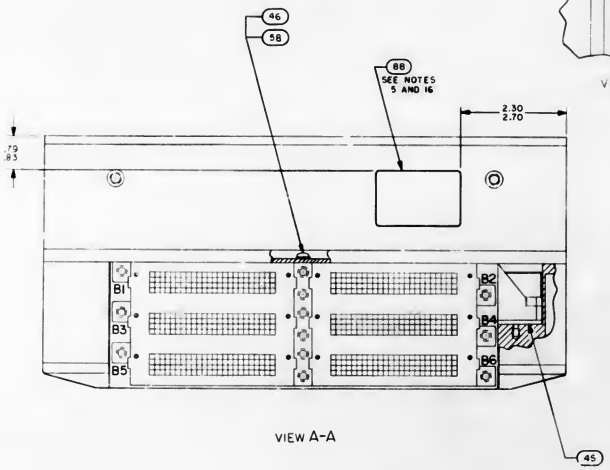

VIEW A-A

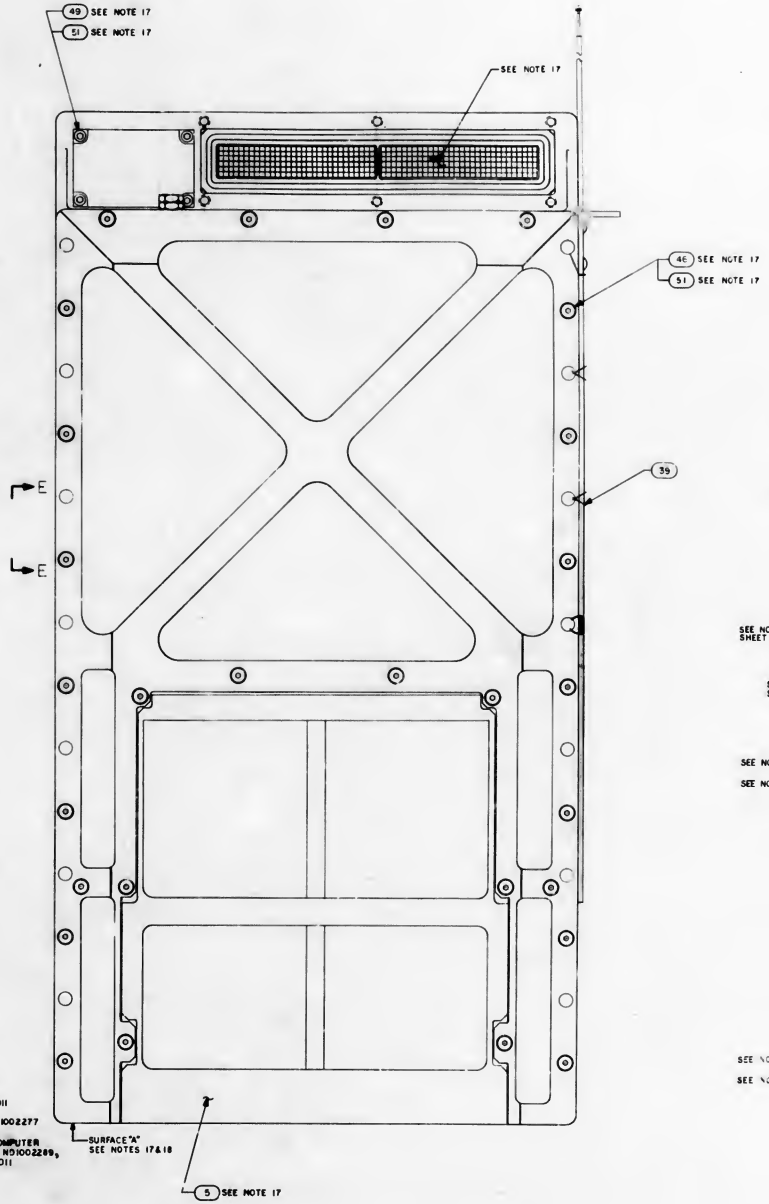

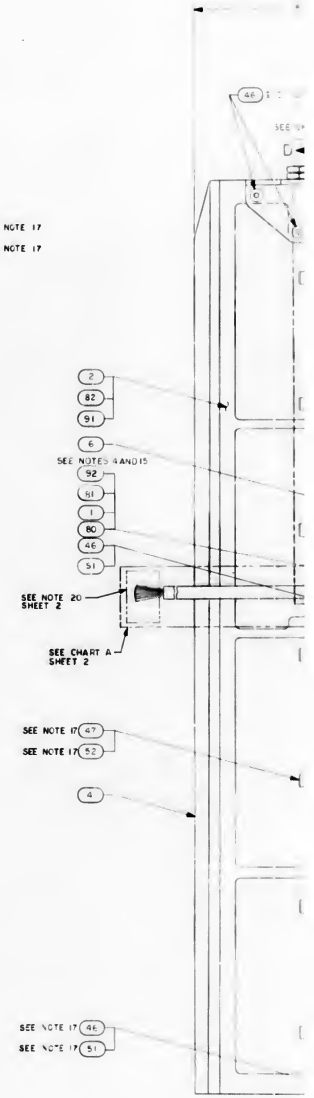

NOTES:

1. INTERPRET DRAWING IN ACCORDANCE WITH STANDARDS PRESCRIBED BY MIL-D-70327
2. PHANTOM LINES DENOTE AGC COLDPLATE AND HANDLING FIXTURE TO BE SUPPLIED BY NORTH AMERICAN AVIATION, INC
3. ADD SILICONE GREASE 1006879 TO MODULE MATING METAL SURFACES AND TRAY MATING SURFACES
4. ASSEMBLE FIND NO. 53 TO FIND NO. 6 AND FIND NO. 6 TO FIND NO. 2 OR 82 PRIOR TO ASSEMBLY OF FIND NO. 2 OR 82 TO FIND NO. 1 OR 81
5. BOND FIND NO. 43 AND FIND NO. 88 TO FIND NO. 2 OR 82 PER ND1002004 TYPE IX
6. UNLESS OTHERWISE SPECIFIED TORQUE ALL MODULE MOUNTING SCREWS 15/19 INCH POUNDS
7. TORQUE FIND NO. 47 TO 28/32 INCH POUNDS
8.
9. APPLY SEALING COMPOUND MIL-S-22473 GRADE A TO FIND NO. 53, FIND NO. 56 AND FIND NO. 44
10. COMPLETED ASSEMBLY SHALL BE TESTED IN ACCORDANCE WITH AND SHALL MEET ALL THE REQUIREMENTS OF THE APPLICABLE RS.
11. TORQUE FOR FIND NO. 36 MOUNTING SCREWS TO BE 4/6 INCH POUNDS
12. TORQUE FOR FIND NO. 46, 49 AND 50 TO BE 18/22 INCH POUNDS
13. TORQUE FOR FIND NO. 53 TO BE 4/6 INCH POUNDS
14. TORQUE FOR FIND NO. 44 TO BE 140/160 INCH POUNDS
15. FIND NO. 40 SHALL BE SUPPLIED AS PART OF THIS ASSEMBLY
16. MARK "COMPUTER ASSY" AND RELATED PART NO., APPLICABLE DASH NO., SERIAL NO. AND CONTRACT NO. PER 1004260. SERIALIZE PER ND1002023
17. PRIME PER ND1002279 USING 1010992, EXCEPT THE FOLLOWING PARTS AND SURFACES:
    A.) FIND NO'S 44, 46, THRU 52, 54, 56, AND FIND NO. 58
    B.) ASI CONNECTOR FEMALE MALCO PINS AND INSULATORS
    C.) ALL EXPOSED TAPPED HOLES
    D.) ALL EXPOSED SURFACES OF FIND NO. 5, EXCEPT SURFACE "A" AND ADJACENT RADII
18. PAINT SURFACE "A" AND ADJACENT RADII FIRST COAT PER ND1002279 USING 1008809-1 AND SECOND COAT PER ND1002277 USING 1012543-003
19. PAINT ALL EXPOSED SURFACES OF COMPUTER WITH ALUMINUM FILLED EPOXY PER ND1002289, EXCEPT SURFACE "A" AND ADJACENT RADII
20. SEE SHEET 2
21. SEE SHEET 2
22. SEE SHEET 2

2003100

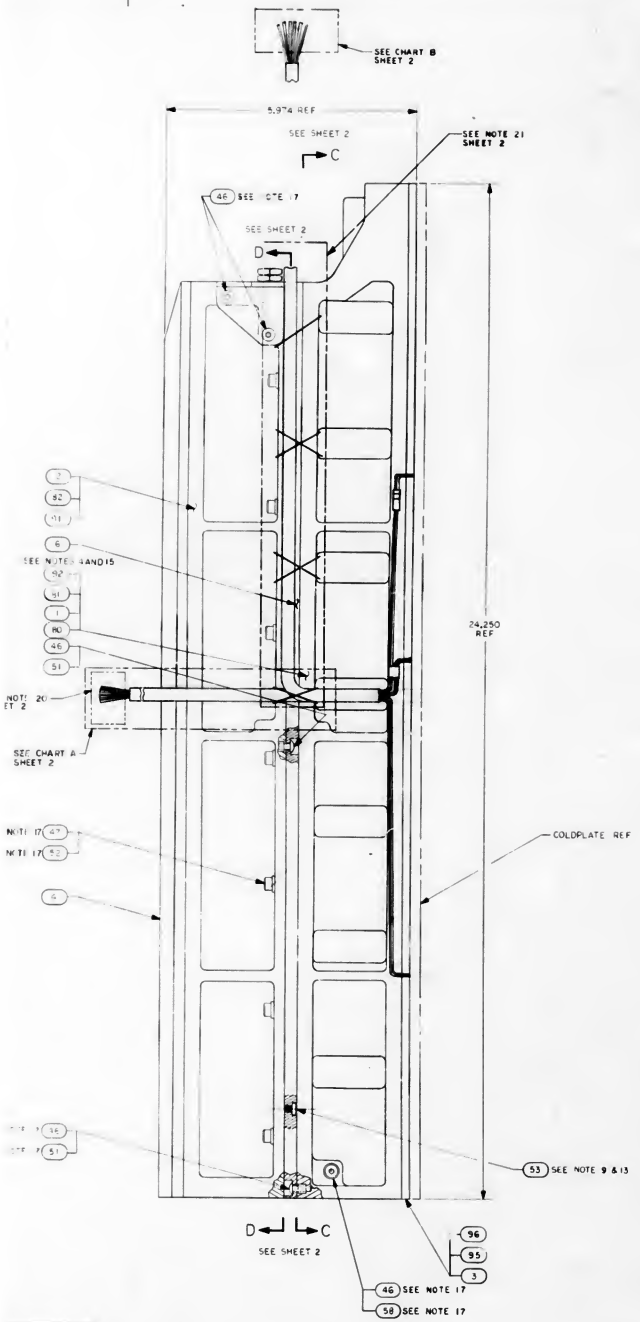

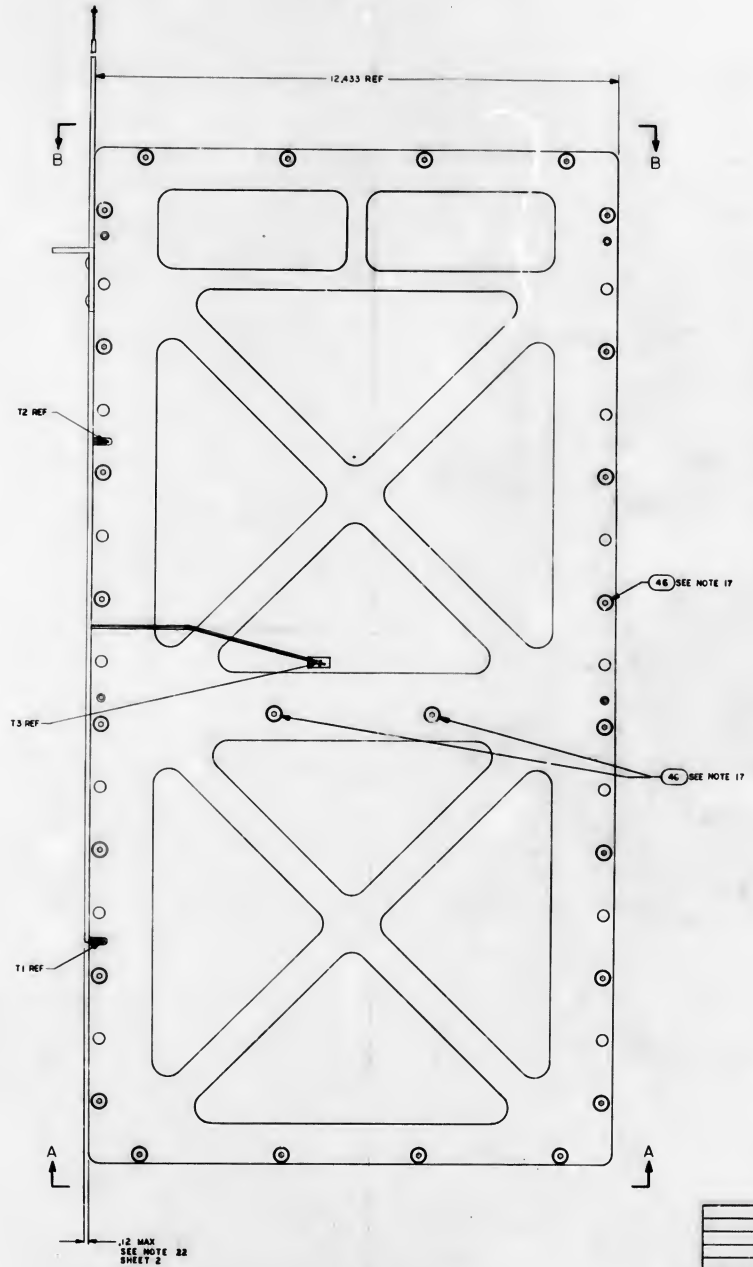

REVISIONS 21166

SYM	ZONE	DESCRIPTION	DR	CHK	DATE	APPROVED
A		MODIFIED PER TDRR 22148				
B		REVISED PER TDRR 22159				
C		REVISED PER TDRR 22780				
D		REVISED PER TDRR 23136				
E		REVISED PER TDRR 23600				
F		REVISED PER TDRR 24193				
G		REVISED PER TDRR 24497				
H		REVISED PER TDRR 25313				
J		REVISED PER TDRR 25772				
K		REVISED PER TDRR 28158				
L		REVISED PER TDRR 33415				

—	—	—	—	—	2003095-011	COVER TRAY A "RESERVE" "B5"		95
—	—	—	—	—	2003096-011	COVER TRAY A "RESERVE" "B6"		94
1	1	1	—	—	2003120-271	LOGIC MODULE A18		94
1	1	1	—	—	2003120-261	LOGIC MODULE A13		93
1	1	—	—	—	2003074-031	TRAY A WIRED ASSY		92
1	1	1	—	—	2003075-031	TRAY B WIRED ASSY		91
2	2	2	—	—	2003089-011	POWER SUPPLY MODULE A30-31		90
—	—	—	—	—	2003090-011	ALARM MODULE B8		89
—	—	—	—	—	1003059-011	NAMEPLATE TYPE B		88
—	—	—	—	—	2003089-011	ALARM MODULE B8		87
—	—	—	—	—	2003035	AGC WIRE LIST		REF
—	—	—	—	—	2003032	AGC WIRE LIST		REF
3	3	3	3	—	2003067-021	INTERFACE MODULE A27-29		86
2	2	2	2	—	2003040-021	ROPE DRIVER MODULE B16-17		85
2	2	2	2	—	2003043-021	SENSE AMPLIFIER MODULE B13-14		84
2	2	2	—	—	2003014-021	ERASABLE DRIVER MODULE B9-10		83
—	—	—	1	—	2003075-021	TRAY B WIRED ASSEMBLY		82
—	—	—	1	—	2003074-021	TRAY A WIRED ASSEMBLY		81
—	—	1	—	—	2003074-031	TRAY A WIRED ASSY		80
1	1	1	1	—	2003120-231	LOGIC MODULE A24		79
1	1	1	1	—	2003120-221	LOGIC MODULE A23		78
1	1	1	1	—	2003120-211	LOGIC MODULE A22		77
1	1	1	1	—	2003120-191	LOGIC MODULE A21		76
1	1	1	1	—	2003120-181	LOGIC MODULE A20		75
1	1	1	1	—	2003120-171	LOGIC MODULE A19		74
—	—	—	1	—	2003120-161	LOGIC MODULE A18		73
1	1	1	1	—	2003120-151	LOGIC MODULE A17		72
1	1	1	1	—	2003120-141	LOGIC MODULE A16		71
1	1	1	1	—	2003120-131	LOGIC MODULE A15		70
1	1	1	1	—	2003120-121	LOGIC MODULE A14		69
—	—	—	1	—	2003120-111	LOGIC MODULE A13		68
1	1	1	1	—	2003120-241	LOGIC MODULE A12		67
4	4	4	4	—	2003120-081	LOGIC MODULE A8-11		66
1	1	1	1	—	2003120-071	LOGIC MODULE A7		65
1	1	1	1	—	2003120-251	LOGIC MODULE A6		64
1	1	1	1	—	2003120-051	LOGIC MODULE A5		63
1	1	1	1	—	2003120-041	LOGIC MODULE A4		62
1	1	1	1	—	2003120-031	LOGIC MODULE A3		61
1	1	1	1	—	2003120-021	LOGIC MODULE A2		60
1	1	1	1	—	2003120-011	LOGIC MODULE A1		59
4	4	4	4	1	NAS1598-008N	WASHER-SEAL 1116		58
1	1	1	1	1	2018773	VALVE PRESSURE ASSEMBLY		56
1	1	1	1	1	1000159-5	PACKING, PREFORMED "O" RING		55
2	2	2	2	2	1004546-1	WASHER, FLAT		54
8	8	8	8	8	2004130	PAD, THREADED		53
18	18	18	18	18	NAS620C-10	WASHER, FLAT		52
38	38	38	38	4	NAS620C-8	WASHER, FLAT		51
2	2	2	2	2	1004489-34	SCREW, HEX SOCKET HEAD		50
4	4	4	4	4	1004722-2	SCREW, CAPTIVE		49
1	1	1	1	1	1000159-7	PACKING, PREFORMED "O" RING		48
18	18	18	18	18	MS16996-14	SCREW, SOCKET HEAD, CAP		47
66	66	66	66	63	1006783-25	SCREW, BUTTON HEAD, HEX SOCKET		46
2	2	2	2	2	1006347	GASKET, PLATE		45
1	1	1	1	1	2004110	PLUG, MACHINE THREAD		44
								43
1	1	1	1	1	2004113	BRACKET, CABLE		42
1	1	1	1	1	2004115	COVER, POTTED		41
1	1	1	1	1	2003055	GASKET, SEAL		40
—	AR	AR	—	—	1012507-003	TAPE, LACING		39
—	—	—	3	3	2003067-011	INTERFACE MODULE A27-29		38
2	2	2	2	2	2003070-011	INTERFACE MODULE A25-26		37
—	—	—	2	2	2003056-011	POWER SUPPLY MODULE A30-31		36
—	—	—	—	1	2003020-261	LOGIC MODULE A24		35
—	—	—	—	1	2003020-251	LOGIC MODULE A23		34
—	—	—	—	1	2003020-241	LOGIC MODULE A22		33
—	—	—	—	1	2003020-231	LOGIC MODULE A21		32
—	—	—	—	1	2003020-221	LOGIC MODULE A20		31
—	—	—	—	1	2003020-211	LOGIC MODULE A19		30
—	—	—	—	1	2003020-191	LOGIC MODULE A18		29
—	—	—	—	1	2003020-181	LOGIC MODULE A17		28
—	—	—	—	1	2003020-171	LOGIC MODULE A16		27
—	—	—	—	1	2003020-161	LOGIC MODULE A15		26
—	—	—	—	1	2003020-151	LOGIC MODULE A14		25
—	—	—	—	1	2003020-141	LOGIC MODULE A13		24
—	—	—	—	1	2003020-131	LOGIC MODULE A12		23
—	—	—	—	4	2003020-081	LOGIC MODULE A8-11		22
—	—	—	—	1	2003020-071	LOGIC MODULE A7		21
—	—	—	—	1	2003020-061	LOGIC MODULE A6		20
—	—	—	—	1	2003020-051	LOGIC MODULE A5		19
—	—	—	—	1	2003020-041	LOGIC MODULE A4		18
—	—	—	—	1	2003020-031	LOGIC MODULE A3		17
—	—	—	—	1	2003020-021	LOGIC MODULE A2		16
—	—	—	—	1	2003020-011	LOGIC MODULE A1		15
—	—	—	—	2	2003040-011	ROPE DRIVER MODULE B16-17		14
1	1	1	1	1	2003027-011	STRAND SELECT MODULE B15		13
—	—	—	—	2	2003043-011	SENSE AMPLIFIER MODULE B13-14		12
—	—	—	—	1	2003011-011	ERASABLE MEMORY MODULE B12		11
1	1	1	1	1	2003026-011	CURRENT SWITCH MODULE B11		10
—	—	—	—	2	2003014-011	ERASABLE DRIVER MODULE B9-10		9
—	—	—	—	1	2003089-011	ALARM MODULE B8		8
1	1	1	1	1	2003036-011	OSCILLATOR MODULE B7		7
1	1	1	1	1	1003058-011	MID-SPACER ASSEMBLY		6
1	1	1	1	1	2003059-011	INTERCONNECTION HEADER ASSEMBLY		5
1	1	1	1	1	2003071-011	COVER B ASSEMBLY		4
—	—	—	—	1	2003054-011	COVER A ASSEMBLY		3
—	—	—	—	1	2003075-011	TRAY B WIRED ASSEMBLY		2
—	—	—	—	1	2003074-011	TRAY A WIRED ASSEMBLY		1
RTV 1100	RTV 1170	RTV 1175	RTV 1180	QTY REQD	PART OR IDENTIFYING NO	NOMENCLATURE OR DESCRIPTION		FIND NO

LIST OF MATERIALS

C-5-041-C-31-02-011

UNLESS OTHERWISE SPECIFIED, DIMENSIONS ARE IN INCHES. CAPACITOR VALUES ARE IN μf. RESISTOR VALUES ARE IN OHMS. TOLERANCES ON FRACTIONS ± DECIMALS ± ANGLES ± DO NOT SCALE THIS DRAWING

MATERIAL —

6003001
2003101
NEXT ASSY | USED ON
APPLICATION

MIT INSTRUMENTATION LAB CAMBRIDGE MASS

DRAWN
CHECKED
APPROVED
APPROVED
APPROVED MIT
APPROVED NASA

MANNED SPACECRAFT CENTER HOUSTON TEXAS

COMPUTER ASSEMBLY

CODE IDENT NO 80230 | SIZE J | DRAWING NO. 2003100

SCALE 1/1 | SHEET 1 OF 2

2003100

CHART A FOR -031			
LEAD NO.	CONDUCTOR MATERIAL	INSULATION COLOR	DESTINATION
2	COPPER	BLUE	GGB09T
3	CONSTANTAN	RED	T1
4	COPPER	BLUE	GGB10T
5	CONSTANTAN	RED	T3
6	COPPER	BLUE	GGB10BT
7	CONSTANTAN	RED	T2

CHART B FOR -041			
PIN NO. (100B883-002 COPPER REF)	SOCKET NO. (100B883-003 CONSTANTAN REF)	INSULATION COLOR	DESTINATION
2	3	BLUE	CGB259T
		RED	T1
4	5	BLUE	CGB261T
		RED	T3
6	7	BLUE	CGB260T
		RED	T2

NOTES CONT:

20. LACE CABLE LEG OF FIND NO. 95 TO COMPUTER ASSY 2 PLACES USING FIND NO. 39
21. LACE CABLE LEG OF FIND NO. 96 TO COMPUTER ASSY 4 PLACES USING FIND NO. 39
22. FORM AND LACE FIND NO. 5, WITHIN DIMENSIONS SHOWN.

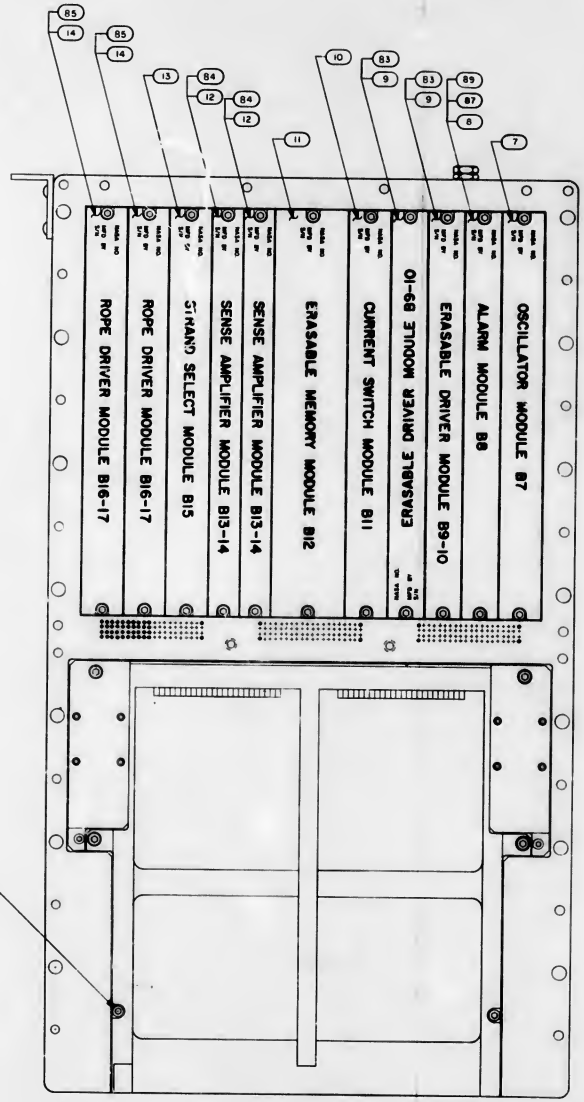

SECTION D-D

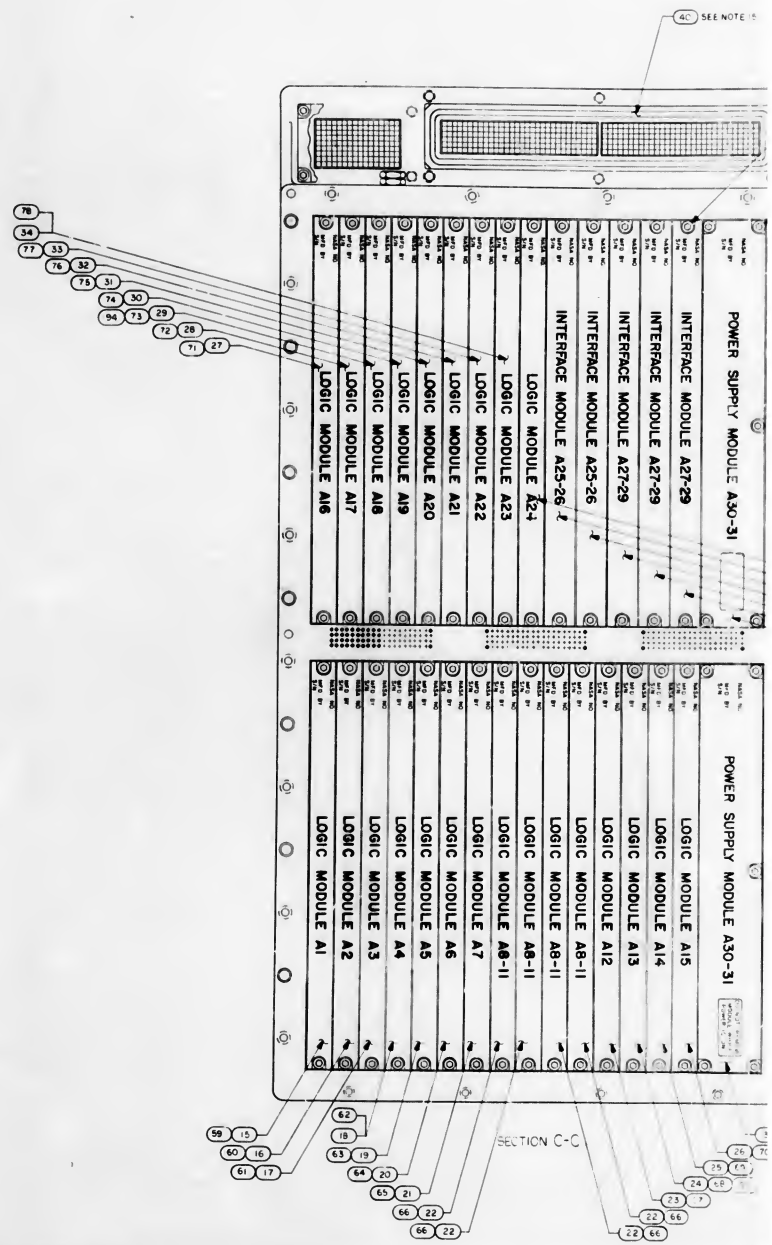

SECTION C-C

2003100 L

REVISIONS						
LTR	ZONE	DESCRIPTION	BY	CHK	DATE	APPROVED
A		REVISED PER TDRR [illegible]	[illegible]	[illegible]	[illegible]	
B		REVISED PER TDRR [illegible]	[illegible]	[illegible]	[illegible]	
C		REVISED PER TDRR 22780	[illegible]			
D		REVISED PER TDRR 23156	KCN	[illegible]	[illegible]	
E		REVISED PER TDRR 23600	KCN	[illegible]	[illegible]	
F		REVISED PER TDRR 24193	[illegible]	[illegible]	[illegible]	
G		REVISED PER TDRR 24497	[illegible]	[illegible]	[illegible]	
H		REVISED PER TDRR 25313	KCN	[illegible]	[illegible]	
J		REVISED PER TDRR 25772	[illegible]	[illegible]	[illegible]	
K		REVISED PER TDRR 28158	[illegible]	[illegible]	[illegible]	
L		REVISED PER TDRR 33625	[illegible]	[illegible]	[illegible]	

QTY REQD	PART OR IDENTIFYING NO	NOMENCLATURE OR DESCRIPTION	PARA NO
		LIST OF MATERIALS	

UNLESS OTHERWISE SPECIFIED
DIMENSIONS ARE IN INCHES
CAPACITOR VALUES ARE IN µf
RESISTOR VALUES ARE IN OHMS
TOLERANCES ON
FRACTIONS DECIMALS ANGLES
± — ± — ± —
DO NOT SCALE THIS DRAWING
MATERIAL

NEXT ASSY | USED ON
APPLICATION

MIT INSTRUMENTATION LAB CAMBRIDGE, MASS.

MANNED SPACECRAFT CENTER HOUSTON, TEXAS

COMPUTER ASSEMBLY

CODE IDEN NO	SIZE	DRAWING NO
80230	J	2003100

SCALE 1/1 SHEET 2 OF 2

2003100

F-2/2

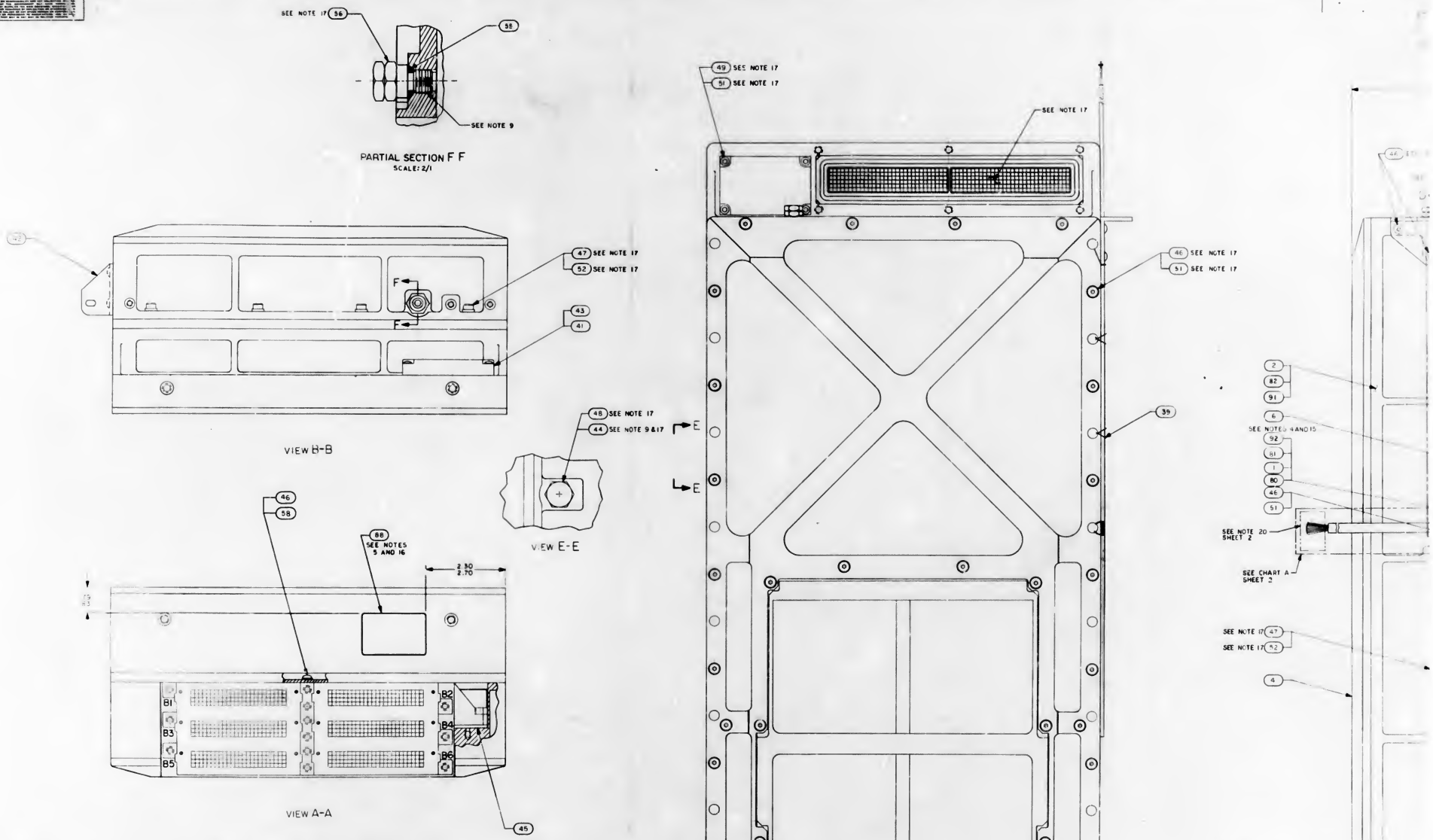

NOTES:

1. INTERPRET DRAWING IN ACCORDANCE WITH STANDARDS PRESCRIBED BY MIL-D-70.27
2. PHANTOM LINES DENOTE AGC COLDPLATE AND HANDLING FIXTURE TO BE SUPPLIED BY NORTH AMERICAN AVIATION, INC
3. ASSY SILICONE GREASE 1006879 TO MODULE MATING METAL SURFACES AND TRAY MATING SURFACES
4. ASSEMBLE FIND NO. 53 TO FIND NO. 6 AND FIND NO. 6 TO FIND NO. 2 OR 82 PRIOR TO ASSEMBLY OF FIND NO. 2 OR 82 TO FIND NO. 1 OR 81
5. HONC FIND NO. 43 AND FIND NO. 88 TO FIND NO. 2 OR 82 PER ND1002004 TYPE IX
6. UNLESS OTHERWISE SPECIFIED TORQUE ALL MODULE MOUNTING SCREWS 15/19 INCH POUNDS
7. TORQUE FIND NO. 47 TO 28/32 INCH POUNDS
8. [illegible]
9. APPLY SEALING COMPOUND MIL-S-22473 GRADE A TO FIND NO. 53, FIND NO. 56 AND FIND NO. 44
10. COMPLETED ASSEMBLY SHALL BE TESTED IN ACCORDANCE WITH AND SHALL MEET ALL THE REQUIREMENTS OF THE APPLICABLE RS.
11. TORQUE FOR FIND NO. 36 MOUNTING SCREWS TO BE 4/6 INCH POUNDS
12. TORQUE FOR FIND NO. 46, 49 AND 50 TO BE 18/22 INCH POUNDS
13. TORQUE FOR FIND NO. 53 TO BE 4/6 INCH POUNDS
14. TORQUE FOR FIND NO. 44 TO BE 140/160 INCH POUNDS
15. FIND NO. 40 SHALL BE SUPPLIED AS PART OF THIS ASSEMBLY.
16. MARK "COMPUTER ASSY" AND RELATED PART NO., APPLICABLE DASH NO., SERIAL NO. AND CONTRACT NO. PER 1004260. SERIALIZE PER ND1002023
17. PRIME PER ND1002279 USING 1010992, EXCEPT THE FOLLOWING PARTS AND SURFACES:
    A) FIND NO'S 44, 46, THRU 52, 54, 56, AND FIND NO. 58
    B) ASI CONNECTOR FEMALE MALCO PINS AND INSULATORS
    C) ALL EXPOSED TAPPED HOLES
    D) ALL EXPOSED SURFACES OF FIND NO. 5, EXCEPT SURFACE "A" AND ADJACENT RADII
18. PAINT SURFACE "A" AND ADJACENT RADII FIRST COAT PER ND1002279 USING 1008809-1 AND SECOND COAT PER ND1002277 USING 1012548-003
19. PAINT ALL EXPOSED SURFACES OF COMPUTER WITH ALUMINUM FILLED EPOXY PER ND1002289, EXCEPT SURFACE "A" AND ADJACENT RADII
20. SEE SHEET 2
21. SEE SHEET 2
22. SEE SHEET 2

2003100

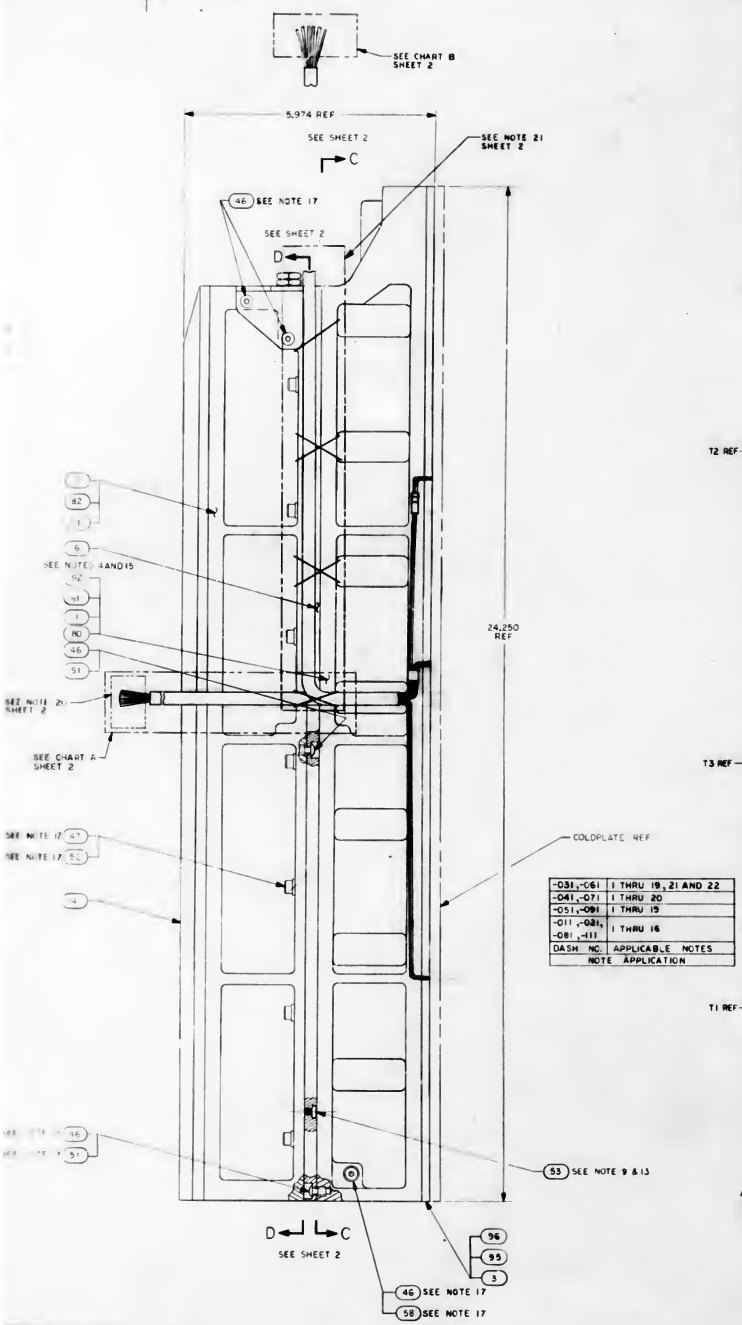

-031,-061	1 THRU 19, 21 AND 22
-041,-071	1 THRU 20
-051,-091	1 THRU 19
-011,-021, -081,-111	1 THRU 16
DASH NO.	APPLICABLE NOTES
NOTE APPLICATION	

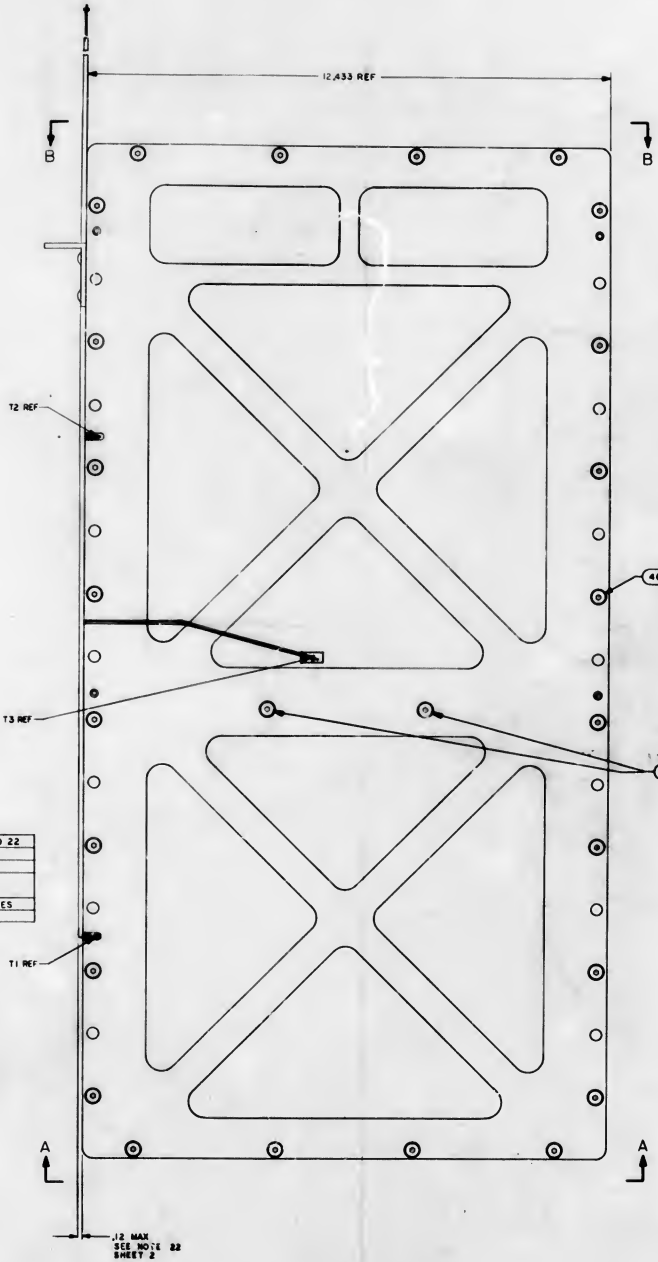

REVISIONS

REV	ZONE	DESCRIPTION	BY	CHK	DATE	APPROVED
A		RELEASE PER TDRR 22148				
B		REVISED PER TDRR 22158				
C		REVISED PER TDRR 22780				
D		REVISED PER TDRR 23136				
E		REVISED PER TDRR 23600				
F		REVISED PER TDRR 24193				
G		REVISED PER TDRR 24497				
H		REVISED PER TDRR 25313				
J		REVISED PER TDRR 25772				
K		REVISED PER TDRR 28158				
L		REVISED PER TDRR 33415				
M		REVISED PER TDRR 33438				

QTY REQD -011	QTY REQD -021	QTY REQD -031	QTY REQD -041	QTY REQD -051	QTY REQD -061	QTY REQD -071	QTY REQD -081	QTY REQD -091	QTY REQD -111	PART OR IDENTIFYING NO	NOMENCLATURE OR DESCRIPTION	FIND NO
—	—	—	—	—	—	—	—	—	—	2003099-011	COVER TRAY B THERMAL	95
—	—	—	—	—	—	—	—	—	—	2003096-011	COVER TRAY A THERMAL	94
—	—	—	—	—	—	—	—	—	—	2003120-271	LOGIC MODULE A18	93
—	—	—	—	—	—	—	—	—	—	2003120-261	LOGIC MODULE A13	92
—	—	—	—	—	—	—	—	—	—	2003074-041	TRAY A WIRED ASSY	91
—	—	—	—	—	—	—	—	—	—	2003075-031	TRAY B WIRED ASSY	90
—	2	—	2	2	2	2	2	—	—	2003085-011	POWER SUPPLY MODULE A30-3	89
—	—	—	—	—	—	—	—	—	—	2003084-011	ALARM MODULE B9	88
—	—	—	—	—	—	—	—	—	—	10012480-19	NAMEPLATE-TYPE 1	88
—	—	—	—	—	—	—	—	—	—	2003069-011	ALARM MODULE B8	87
—	—	—	—	—	—	—	—	—	—	2003036	AGC WIRE LIST	REF
—	—	—	—	—	—	—	—	—	—	2003032	AGC WIRE LIST	REF
—	3	3	3	3	3	3	3	3	—	2003067-021	INTERFACE MODULE A27-29	86
—	2	2	2	2	2	2	2	2	—	2003040-021*	ROPE DRIVER MODULE B16-17	85
—	2	2	2	2	2	2	2	2	—	2003043-021	SENSE AMPLIFIER MODULE B13-14	84
—	2	2	2	2	2	2	2	2	—	2003014-021	ERASABLE DRIVER MODULE B9-10	83
—	—	1	—	—	—	—	—	1	—	2003075-021	*TRAY B WIRED ASSEMBLY	82
—	—	1	—	—	—	—	—	1	—	2003074-021	TRAY A WIRED ASSEMBLY	81
—	—	—	1	—	—	—	—	—	—	2003074-031	TRAY A WIRED ASSY	80
—	1	1	1	1	1	1	1	1	—	2003120-231	LOGIC MODULE A24	79
—	1	1	1	1	1	1	1	1	—	2003120-221	LOGIC MODULE A23	78
—	1	1	1	1	1	1	1	1	—	2003120-211	LOGIC MODULE A22	77
—	1	1	1	1	1	1	1	1	—	2003120-191	LOGIC MODULE A21	76
—	1	1	1	1	1	1	1	1	—	2003120-181	LOGIC MODULE A20	75
—	1	1	1	1	1	1	1	1	—	2003120-171	LOGIC MODULE A19	74
—	—	1	1	—	—	—	—	1	—	2003120-161	LOGIC MODULE A18	73
—	1	1	1	1	1	1	1	1	—	2003120-151	LOGIC MODULE A17	72
—	1	1	1	1	1	1	1	1	—	2003120-141	LOGIC MODULE A16	71
—	1	1	1	1	1	1	1	1	—	2003120-131	LOGIC MODULE A15	70
—	1	1	1	1	1	1	1	1	—	2003120-121	LOGIC MODULE A14	69
—	—	1	1	—	—	—	—	1	—	2003120-111	LOGIC MODULE A13	68
—	1	1	1	1	1	1	1	1	—	2003120-241	LOGIC MODULE A12	67
—	4	4	4	4	4	4	4	4	—	2003120-081	LOGIC MODULE A8-11	66
—	1	1	1	1	1	1	1	1	—	2003120-071	LOGIC MODULE A7	65
—	1	1	1	1	1	1	1	1	—	2003120-061	LOGIC MODULE A6	64
—	1	1	1	1	1	1	1	1	—	2003120-051	LOGIC MODULE A5	63
—	1	1	1	1	1	1	1	1	—	2003120-041	LOGIC MODULE A4	62
—	1	1	1	1	1	1	1	1	—	2003120-031	LOGIC MODULE A3	61
—	1	1	1	1	1	1	1	1	—	2003120-021	LOGIC MODULE A2	60
—	1	1	1	1	1	1	1	1	—	2003120-011	LOGIC MODULE A1	59
1	4	4	4	4	4	4	4	4	1	NAS1598-008N	WASHER-SEALING	58
												57
1				1					1	2018773	VALVE PRESSURE ASSEMBLY	56
1				1	1	1	1	1	1	1000159-3	PACKING, PREFORMED "O" RING	55
2	2	2	2	2	2	2	2	2	2	1004546-1	WASHER, FLAT	54
8	8	8	8	8	8	8	8	8	8	2004130	PAD, THREADED	53
18	18	18	18	18	18	18	18	18	18	NAS620C-10	WASHER, FLAT	52
—	34	34	34	34	38	38	38	38	4	NAS620C-8	WASHER, FLAT	51
2	2	2	2	2	2	2	2	2	2	1001489-34	SCREW, HEX SOCKET HEAD	50
—	—	—	—	—	4	4	4	4	4	1004722-2	SCREW, CAPTIVE	49
1	1	1	1	1	1	1	1	1	1	1000159-7	PACKING, PREFORMED "O" RING	48
18	18	18	18	18	18	18	18	18	18	MS16996-14	SCREW, SOCKET HEAD, CAP	47
63	66	66	66	66	66	66	66	66	63	1006783-25	SCREW, BUTTON HEAD, HEX SOCKET	46
2	2	2	2	2	2	2	2	2	2	1006347	GASKET, PLATE	45
1	1	1	1	1	1	1	1	1	1	2004110	PLUG, MACHINE THREAD	44
1	1	1	1	1	—	—	—	—	—	2003099-011	COVER, TEST CONN	43
1	1	1	1	1	1	1	1	1	1	2004113	BRACKET, CABLE	42
—	—	—	—	—	1	1	1	1	1	2004115	COVER, POTTED	41
1	1	1	1	1	1	1	1	1	1	2003055	GASKET, SEAL	40
—	—	—	AR	AR	—	AR	AR	—	—	10123507-003	TAPE, LACING	39
3	—	—	—	—	—	—	—	—	3	2003067-011	INTERFACE MODULE A27-29	38
2	2	2	2	2	2	2	2	2	2	2003070-011	INTERFACE MODULE A26-26	37
2	—	2	—	—	—	—	—	2	2	2003056-011	POWER SUPPLY MODULE A30-31	36
1	—	—	—	—	—	—	—	—	1	2003020-261	LOGIC MODULE A24	35
1	—	—	—	—	—	—	—	—	1	2003020-251	LOGIC MODULE A23	34
1	—	—	—	—	—	—	—	—	1	2003020-241	LOGIC MODULE A22	33
1	—	—	—	—	—	—	—	—	1	2003020-231	LOGIC MODULE A21	32
1	—	—	—	—	—	—	—	—	1	2003020-221	LOGIC MODULE A20	31
1	—	—	—	—	—	—	—	—	1	2003020-211	LOGIC MODULE A19	30
1	—	—	—	—	—	—	—	—	1	2003020-191	LOGIC MODULE A18	29
1	—	—	—	—	—	—	—	—	1	2003020-181	LOGIC MODULE A17	28
1	—	—	—	—	—	—	—	—	1	2003020-171	LOGIC MODULE A16	27
1	—	—	—	—	—	—	—	—	1	2003020-161	LOGIC MODULE A15	26
1	—	—	—	—	—	—	—	—	1	2003020-151	LOGIC MODULE A14	25
1	—	—	—	—	—	—	—	—	1	2003020-141	LOGIC MODULE A13	24
1	—	—	—	—	—	—	—	—	1	2003020-131	LOGIC MODULE A12	23
4	—	—	—	—	—	—	—	—	4	2003020-081	LOGIC MODULE A8-11	22
1	—	—	—	—	—	—	—	—	1	2003020-071	LOGIC MODULE A7	21
1	—	—	—	—	—	—	—	—	1	2003020-061	LOGIC MODULE A6	22
1	—	—	—	—	—	—	—	—	1	2003020-051	LOGIC MODULE A5	19
1	—	—	—	—	—	—	—	—	1	2003020-041	LOGIC MODULE A4	18
1	—	—	—	—	—	—	—	—	1	2003020-031	LOGIC MODULE A3	17
1	—	—	—	—	—	—	—	—	1	2003020-021	LOGIC MODULE A2	16
1	—	—	—	—	—	—	—	—	1	2003020-011	LOGIC MODULE A1	15
2	—	—	—	—	—	—	—	—	2	2003040-011	ROPE DRIVER MODULE B16-17	14
1	—	—	—	1	—	—	—	—	1	2003027-011	STRAND SELECT MODULE B15	13
2	—	—	—	—	—	—	—	—	2	2003043-011	SENSE AMPLIFIER MODULE B13-14	12
1	1	1	1	1	1	1	1	1	1	2003011-011	ERASABLE MEMORY MODULE B12	11
1	1	1	1	1	1	1	1	1	1	2003026-011	CURRENT SWITCH MODULE B11	10
2	2	2	2	2	2	2	2	2	2	2003014-011	ERASABLE DRIVER MODULE B9-10	9
1	—	—	—	—	—	—	—	—	1	2003069-011	ALARM MODULE B8	8
1	1	1	1	1	1	1	1	1	1	2003036-011	OSCILLATOR MODULE B7	7
1	1	1	1	1	1	1	1	1	1	2003058-011	MID-SPACER ASSEMBLY	6
1	1	1	1	1	1	1	1	1	1	2003059-011	INTERCONNECTION HEADER ASSEMBLY	5
1	1	1	1	1	1	1	1	1	1	2003071-011	COVER B ASSEMBLY	4
1	1	1	1	1	—	—	—	—	1	2003054-011	COVER A ASSEMBLY	3
1	1	1	1	1	—	—	—	—	1	2003075-011	TRAY B WIRED ASSEMBLY	2
1	1	1	1	1	—	—	—	—	1	2003074-011	TRAY A WIRED ASSEMBLY	1

LIST OF MATERIALS

6003001	
2003101	
NEXT ASSY	USED ON
APPLICATION	

UNLESS OTHERWISE SPECIFIED DIMENSIONS ARE IN INCHES CAPACITOR VALUES ARE IN µf RESISTOR VALUES ARE IN OHMS TOLERANCES ON FRACTIONS ± DECIMALS ± ANGLES ± DO NOT SCALE THIS DRAWING MATERIAL —

MIT INSTRUMENTATION LAB CAMBRIDGE, MASS

MANNED SPACECRAFT CENTER HOUSTON, TEXAS

COMPUTER ASSEMBLY

CODE IDENT NO	SIZE	DRAWING NO
80230	J	2003100

SCALE — SHEET 1 OF 2

CHART A FOR -031 & -061			
LEAD NO.	CONDUCTOR MATERIAL	INSULATION COLOR	DESTINATION
2	COPPER	BLUE	GGB107T
3	CONSTANTAN	RED	T1
4	COPPER	BLUE	GGB109T
5	CONSTANTAN	RED	T3
6	COPPER	BLUE	GGB108T
7	CONSTANTAN	RED	T2

CHART B FOR -041 & -071			
PIN NO. (1008883-002 COPPER REF)	SOCKET NO. (1008883-003 CONSTANTAN REF)	INSULATION COLOR	DESTINATION
2		BLUE	CG8259T
	3	RED	T1
4		BLUE	CG8261T
	5	RED	T3
6		BLUE	CG8260T
	7	RED	T2

NOTES CONT:

20. LACE CABLE LEG OF FIND NO. 95 TO COMPUTER ASSY 2 PLACES USING FIND NO. 39
21. LACE CABLE LEG OF FIND NO. 96 TO COMPUTER ASSY 4 PLACES USING FIND NO. 39
22. FORM AND LACE FIND NO. 98 WITHIN DIMENSIONS SHOWN.

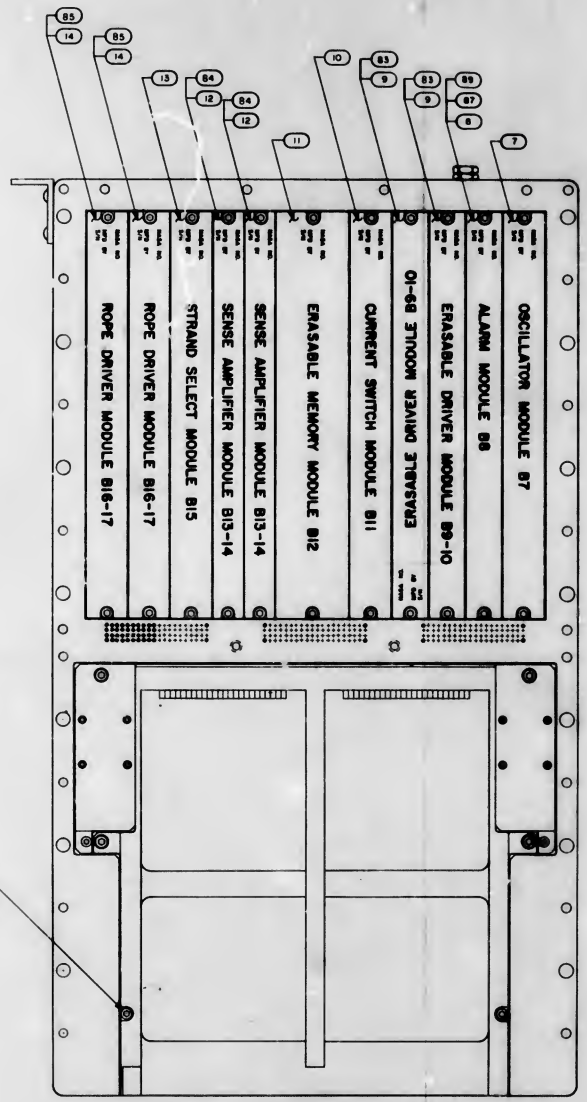

SECTION D-D

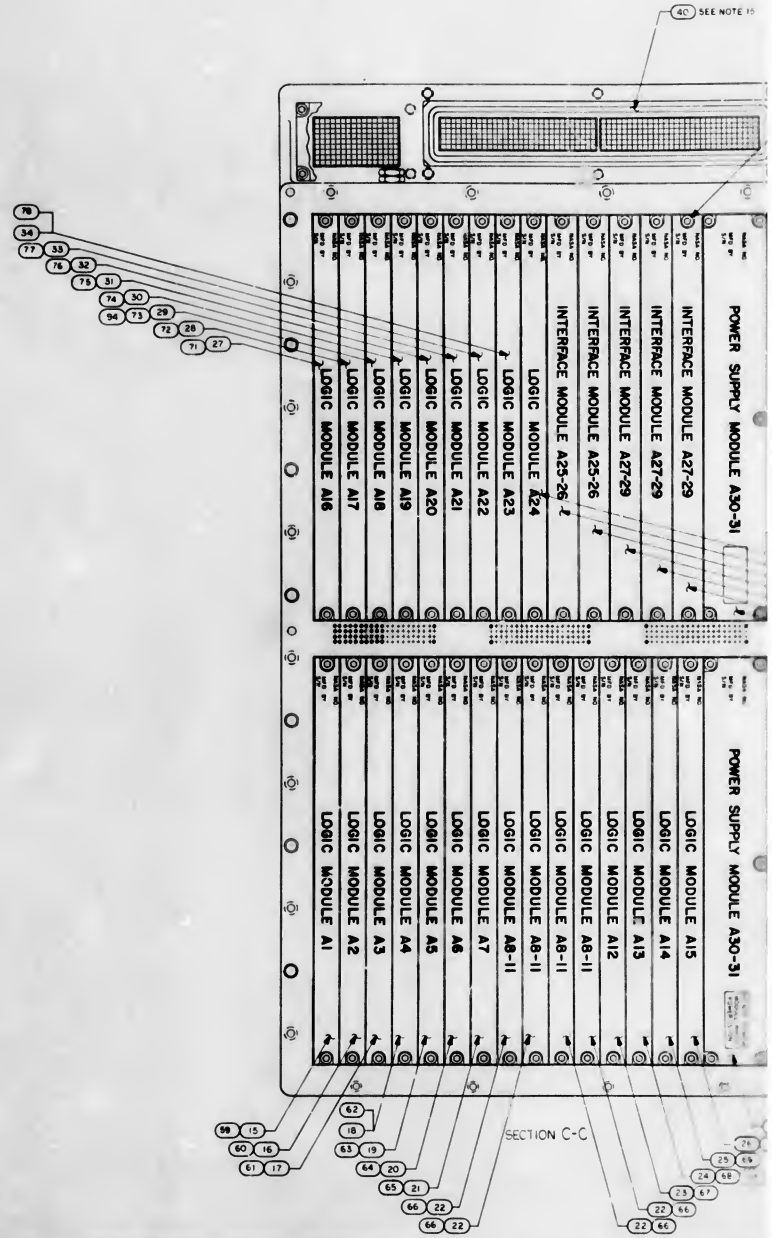

SECTION C-C

2003100 M

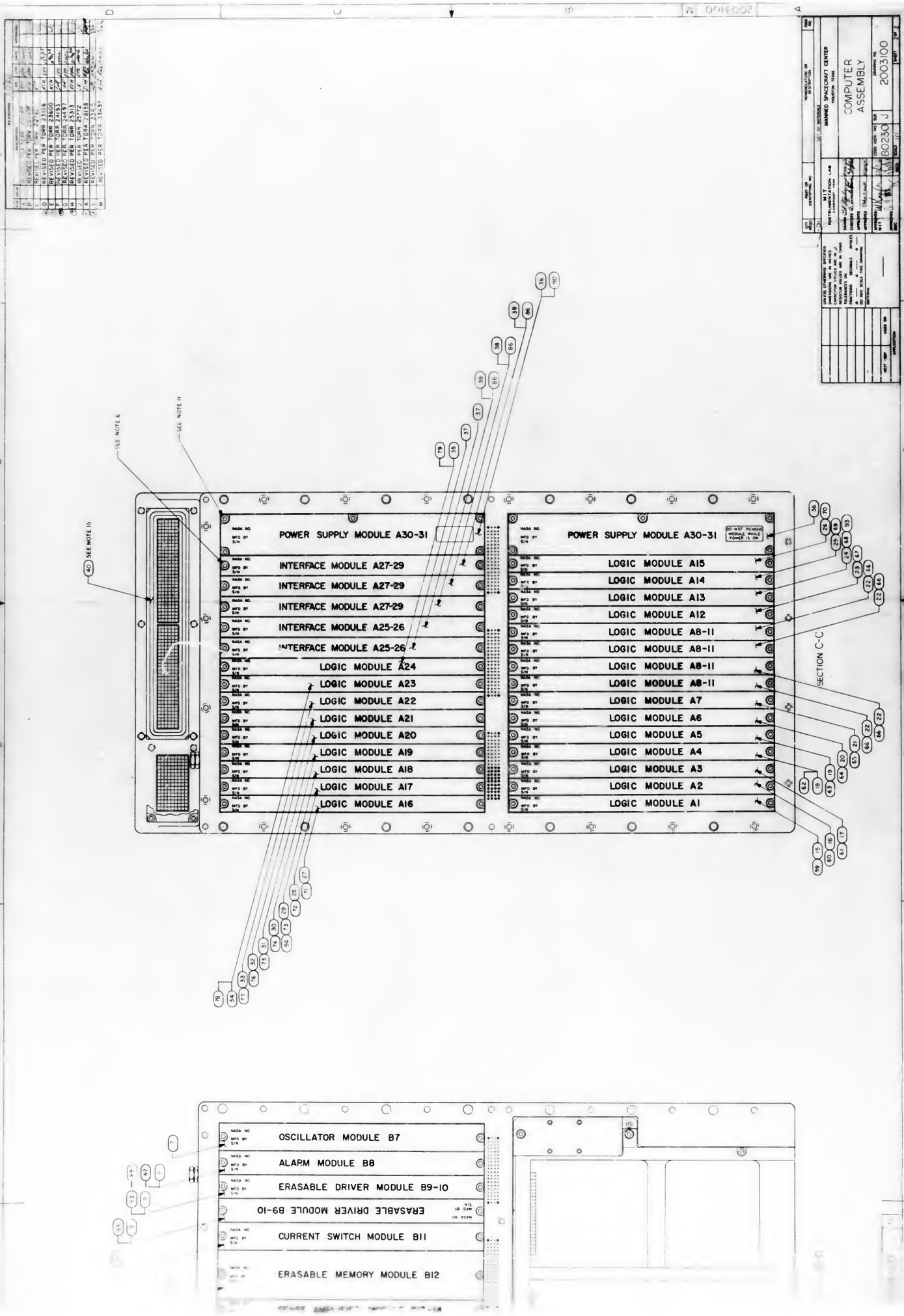
COMPUTER ASSEMBLY
MANNED SPACECRAFT CENTER
MIT INSTRUMENTATION LAB
2003100
80230
SEE NOTE 6
SEE NOTE 11
SEE NOTE 15
POWER SUPPLY MODULE A30-31
INTERFACE MODULE A27-29
INTERFACE MODULE A27-29
INTERFACE MODULE A27-29
INTERFACE MODULE A25-26
INTERFACE MODULE A25-26
LOGIC MODULE A24
LOGIC MODULE A23
LOGIC MODULE A22
LOGIC MODULE A21
LOGIC MODULE A20
LOGIC MODULE A19
LOGIC MODULE A18
LOGIC MODULE A17
LOGIC MODULE A16
POWER SUPPLY MODULE A30-31
DO NOT REMOVE MODULE WHILE POWER IS ON
LOGIC MODULE A15
LOGIC MODULE A14
LOGIC MODULE A13
LOGIC MODULE A12
LOGIC MODULE A8-11
LOGIC MODULE A8-11
LOGIC MODULE A8-11
LOGIC MODULE A8-11
LOGIC MODULE A7
LOGIC MODULE A6
LOGIC MODULE A5
LOGIC MODULE A4
LOGIC MODULE A3
LOGIC MODULE A2
LOGIC MODULE A1
SECTION C-C
OSCILLATOR MODULE B7
ALARM MODULE B8
ERASABLE DRIVER MODULE B9-10
ERASABLE DRIVER MODULE B9-10
CURRENT SWITCH MODULE B11
ERASABLE MEMORY MODULE B12

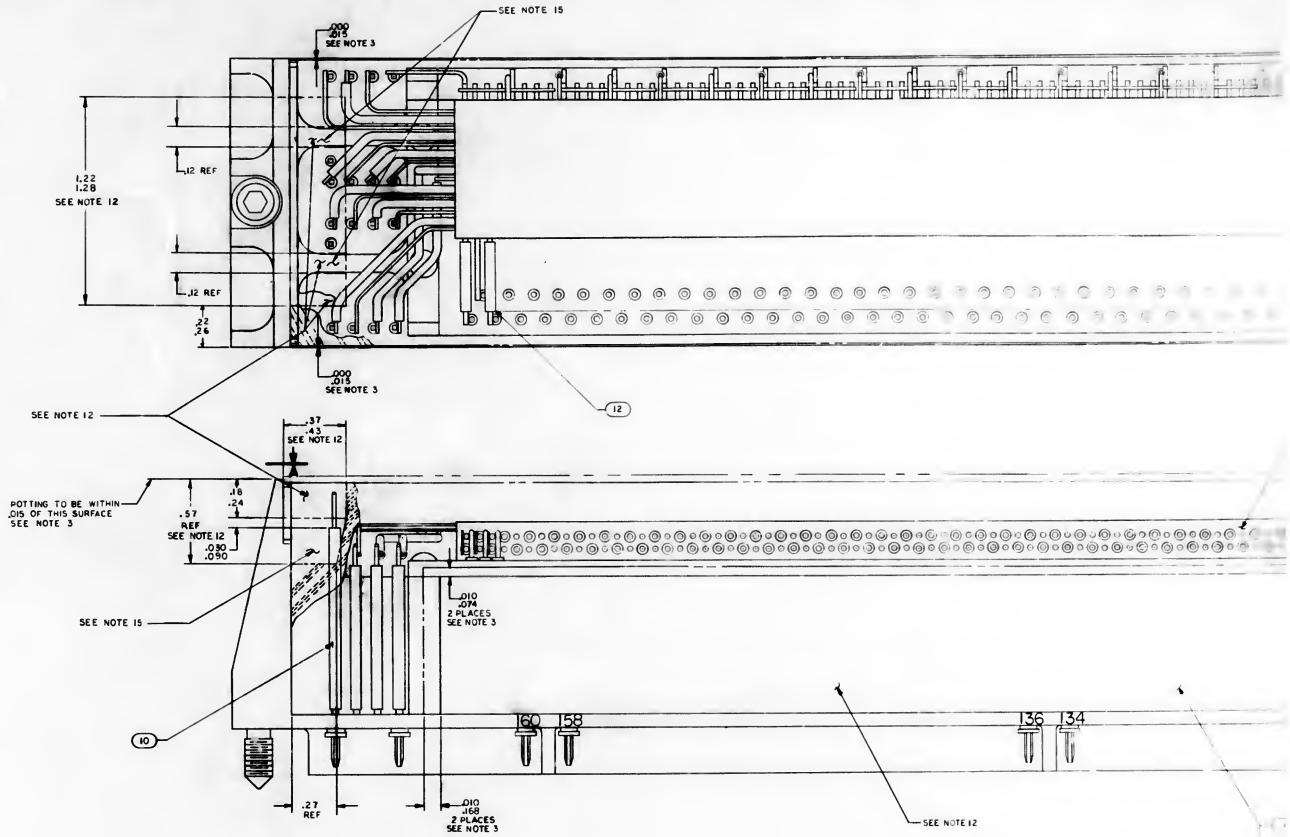

C1	
PART NO.	VALUE UUF
1006777-1	10
-15	150
-18	330
-20	470
-22	680
1006777-23	820
SEE NOTE 14	0

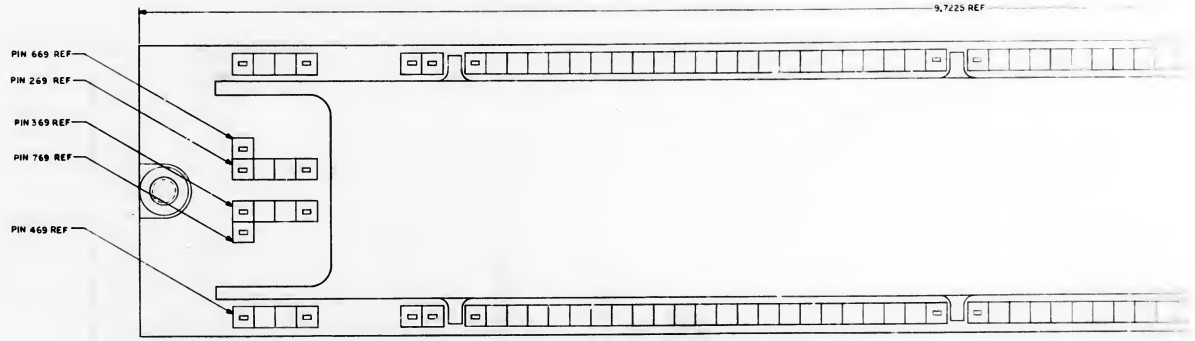

NOTES:

1. INTERPRET DRAWING IN ACCORDANCE WITH STANDARDS PRESCRIBED BY MIL-D-70327.
2. WELD PER ND 1002005.
3. ENCAPSULATE PER ND 1002036 METHOD B
4. AR DENOTES AS REQUIRED.
5. MARK .26/24 HIGH WHITE CHARACTERS PER ND 1002019 AND ND 1002022, TYPE II CLASS 2 USING INK 1006271-1.
6. MARK .10/08 HIGH WHITE CHARACTERS PER ND 1002019 AND ND 1002022, TYPE II CLASS 2 AND SERIALIZE PER ND 1002023 USING INK 1006271-1.
7. UNLESS OTHERWISE SPECIFIED ALL WIRING SHALL BE IN ACCORDANCE WITH ND 1002069.
8. BOND FIND NO. 2 TO FIND NO. 1 OR FIND NO. 13 TO FIND NO. 14 PER ND 1002004 TYPE II
9. ~~THE VALUE OF C1 TO BE DETERMINED AT ELECTRICAL TEST AND SELECTED FROM APPROPRIATE CHART.~~
10. SEAL FIND NO. 9 TO FIND NO. 1 AND FIND NO. 14 PER ND 1002004, TYPE II
11. MOUNTING TORQUE FOR FIND NO. 9 TO BE 15 TO 20 INCH OUNCES.
12. DO NOT ENCAPSULATE THIS AREA BOTH SIDES & CAVITY ON TOP
13. COMPLETED ASSEMBLY SHALL BE TESTED IN ACCORDANCE WITH AND SHALL MEET ALL THE REQUIREMENTS OF PS 2003111
14. ~~WHEN THE VALUE OF C1 IS 0 NO COMPONENT SHALL BE USED~~
15. CAVITY WELLS OPTIONAL FOR TOOLING PURPOSES DO NOT ENCAPSULATE
16. PAINT SURFACE INDICATED RED USING MARKING INK 1006271-9

2003111 C

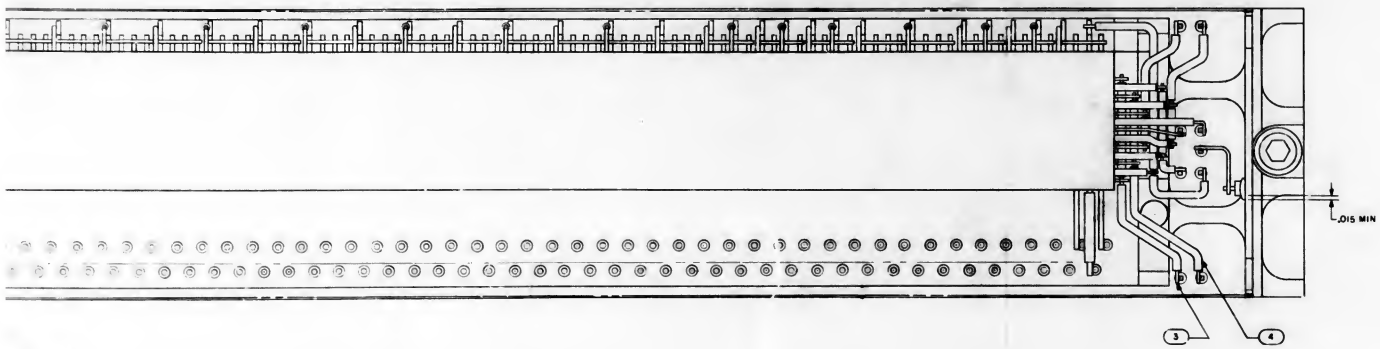

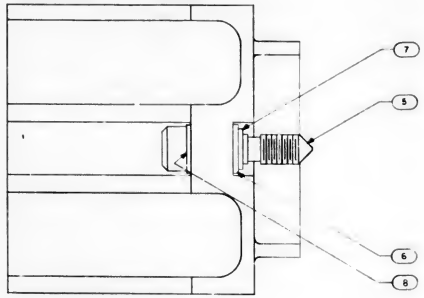

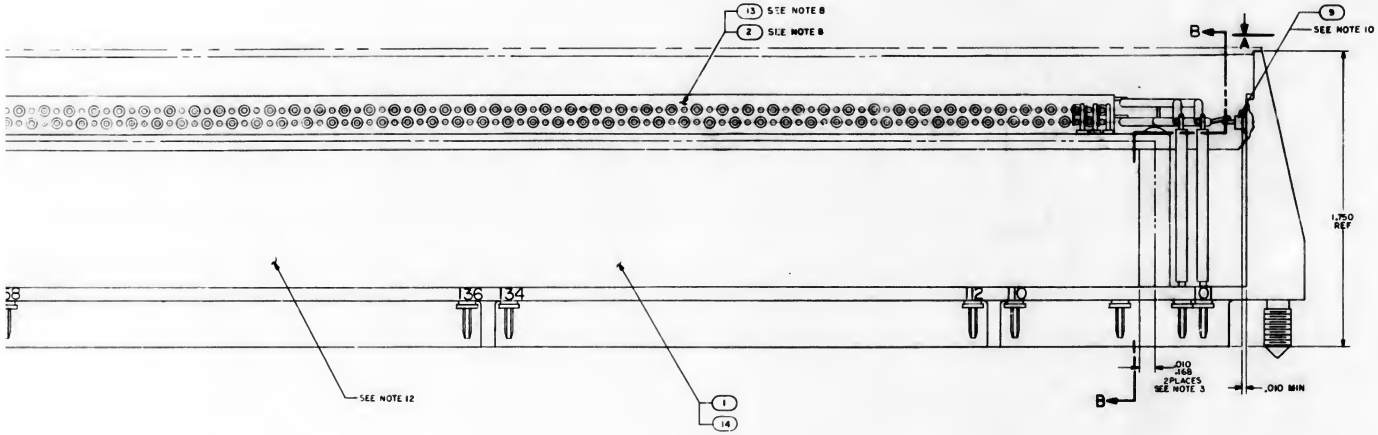

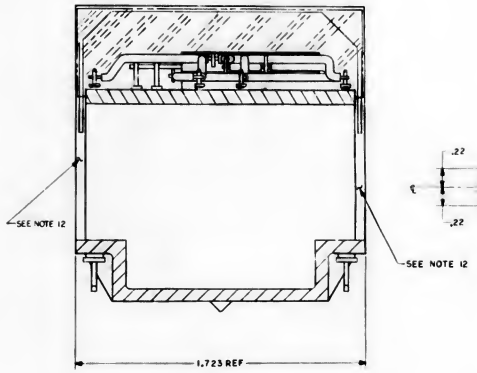

SECTION B-B

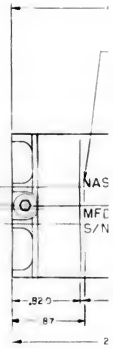

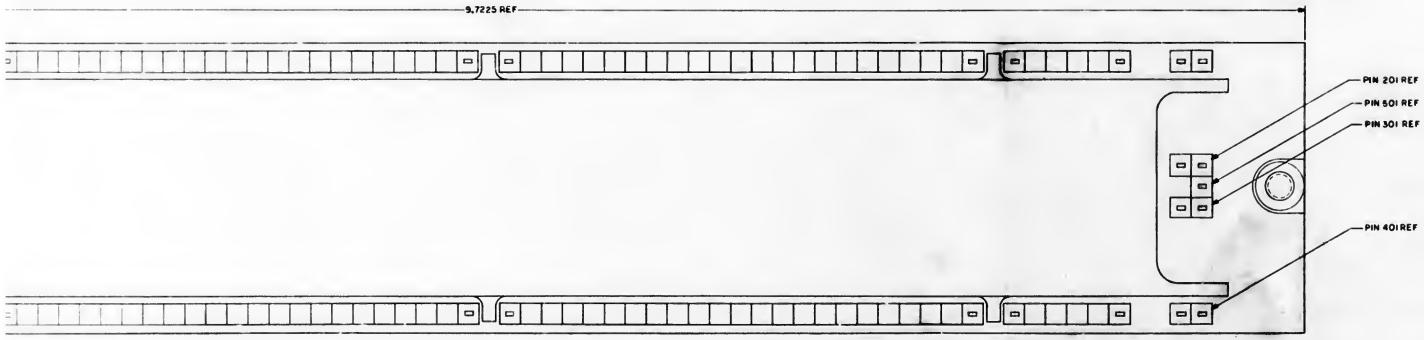

2003111 C

REVISIONS					
SYM	ZONE	DESCRIPTION	DR	CHK	DATE
A		REVISED PER TORR 28160			
B		REVISED PER TORR 30883			
C		REVISED PER TORR 32561			

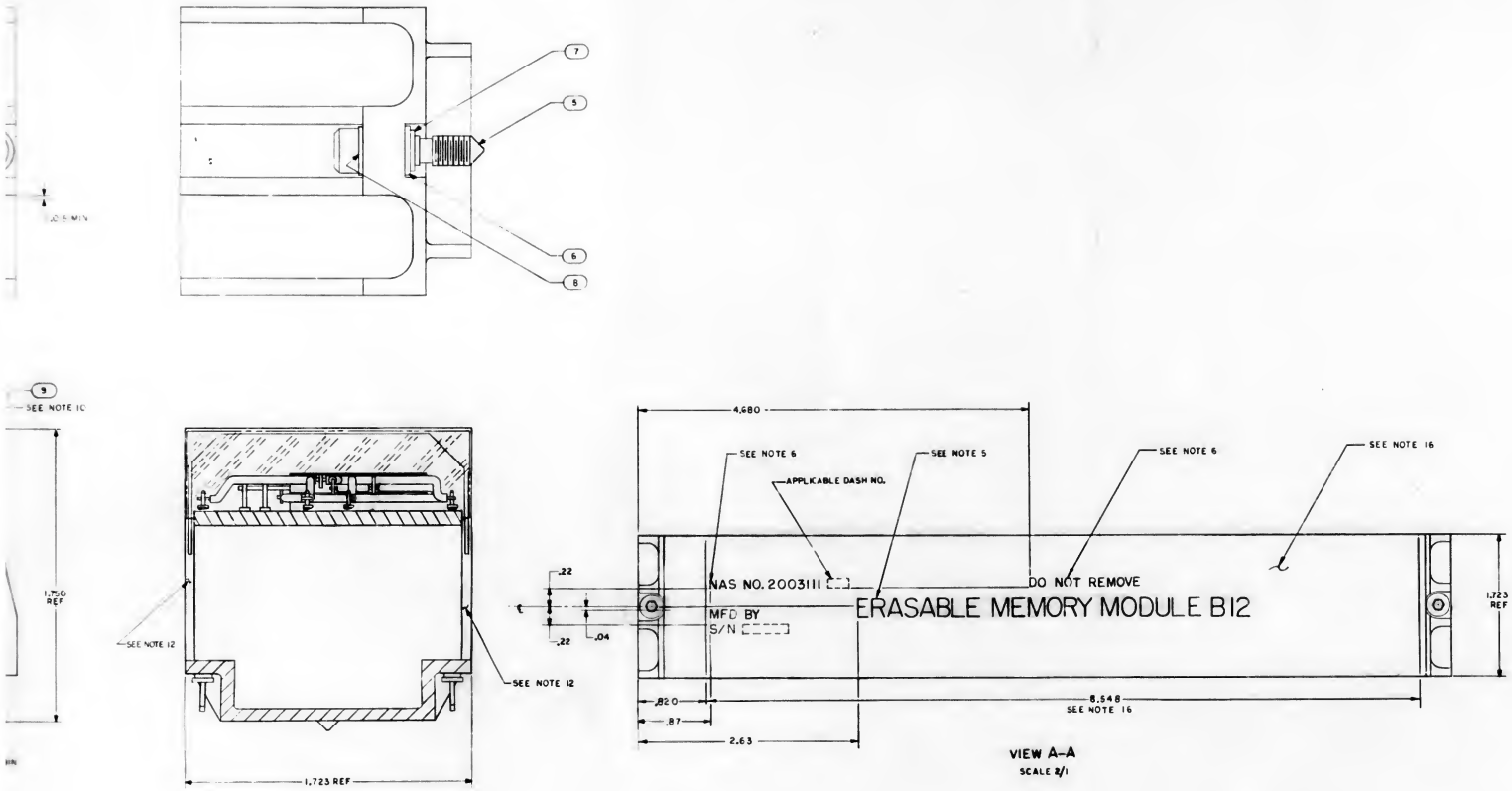

PIN 201 REF
PIN 601 REF
PIN 301 REF
PIN 401 REF

QTY REQD		PART OR IDENTIFYING NO	NOMENCLATURE OR DESCRIPTION	FIND NO
	–	2005131	SCHEMATIC	REF
–		2005106	SCHEMATIC	REF
1	–	2003109-021	CORE STACK ASSY ERASABLE MEMORY	1
1	–	2003112-021	DIODE BLOCK ASSY ERASABLE MEMORY	3
AR	AR	1006776-22	INSULATION SLEEVING ELECTRICAL	12
–	2	SEE NOTE 9	CAPACITOR	11
AR	AR	1006776-20	INSULATION SLEEVING ELECTRICAL	10
1	1	2004539	TERMINAL, THREADED	9
2	2	2004584-001	WASHER, FLAT	8
2	2	MS16633-4015	RING RETAINING EXTERNAL "E"	7
2	2	2004584-003	WASHER, FLAT	6
2	2	1004579-1	SCREW, JACKING	5
AR	AR	1006776-21	INSULATION SLEEVING	4
AR	AR	1006757-8	WIRE, ELECTRICAL	3
–	1	2003112-011	DIODE BLOCK ASSY ERASABLE MEMORY	2
–	1	2003109-011	CORE STACK ASSY ERASABLE MEMORY	1
021	011		LIST OF MATERIALS	

UNLESS OTHERWISE SPECIFIED
DIMENSIONS ARE IN INCHES
CAPACITOR VALUES ARE IN μf
RESISTOR VALUES ARE IN OHMS
TOLERANCES ON
FRACTIONS DECIMALS ANGLES
± ±.02 ±
DO NOT SCALE THIS DRAWING

MATERIAL

NEXT ASSY	USED ON
2003993	
2003200	

APPLICATION

MIT INSTRUMENTATION LAB CAMBRIDGE MASS

DRAWN
CHECKED
APPROVED
APPROVED B11
APPROVED MSC A.C. MITCHELL

MANNED SPACECRAFT CENTER
HOUSTON TEXAS

ERASABLE MEMORY
B12
ASSEMBLY

CODE IDENT NO. 80230 | SIZE J | DRAWING NO 2003111

SCALE 4/1 | SHEET 1 OF 1

2003111 | C

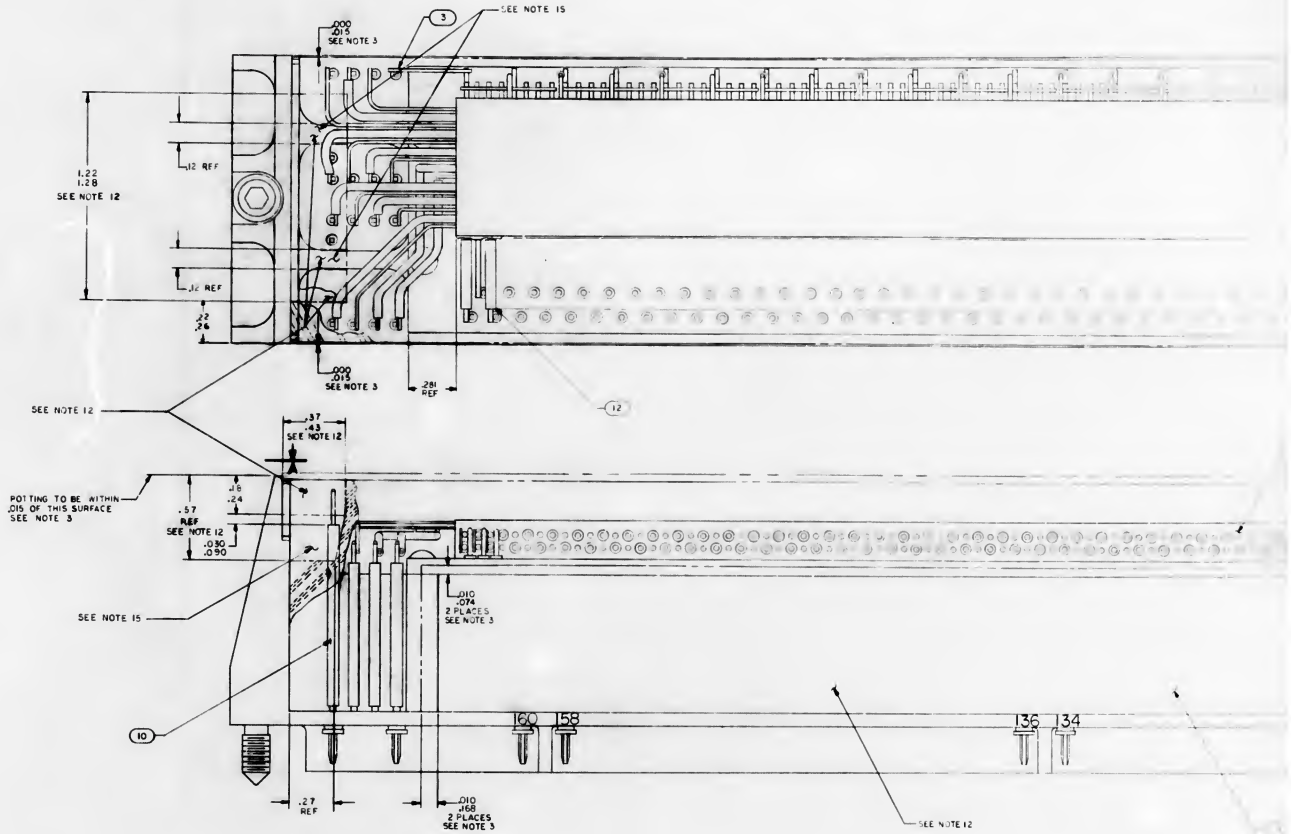

C1	
PART NO.	VALUE UUF
1006277-1	1C
-15	15C
-18	32C
-20	47C
-22	68C
1006277-23	82C
SEE NOTE 14	0

NOTES:

1. INTERPRET DRAWING IN ACCORDANCE WITH STANDARDS PRESCRIBED BY MIL-D-70327.
2. WELD PER ND1002005.
3. ENCAPSULATE PER ND1002036 METHOD B
4. AR DENOTES AS REQUIRED.
5. MARK 26/24 HIGH WHITE CHARACTERS PER ND1002019 AND ND1002022, TYPE II CLASS 2 USING INK 1006271-1.
6. MARK .10/.06 HIGH WHITE CHARACTERS PER ND1002019 AND ND1002022, TYPE II CLASS 2 AND SERIALIZE PER ND1002023 USING INK 100627.-1.
7. UNLESS OTHERWISE SPECIFIED ALL WIRING SHALL BE IN ACCORDANCE WITH ND 1002069.
8. BOND FIND NO. 2 TO FIND NO. 1 OR FIND NO. 13 TO FIND NO.14 PER ND1002004 TYPE II
9. THE VALUE OF C1 TO BE DETERMINED AT ELECTRICAL TEST AND SELECTED FROM APPROPRIATE CHART.
10. SEAL FIND NO. 9 TO FIND NO.1 AND FIND NO.14 PER ND1002004, TYPE II
11. MOUNTING TORQUE FOR FIND NO. 9 TO BE 15 TO 20 INCH OUNCES.
12. DO NOT ENCAPSULATE THIS AREA BOTH SIDES. A CAVITY ON TOP
13. COMPLETED ASSEMBLY SHALL BE TESTED IN ACCORDANCE WITH AND SHALL MEET ALL THE REQUIREMENTS OF PS 2003111
14. WHEN THE VALUE OF C1 IS 0 NO COMPONENT SHALL BE USED
15. CAVITY WELLS OPTIONAL. FOR TOOLING PURPOSES DO NOT ENCAPSULATE
16. PAINT SURFACE INDICATED RED USING MARKING INK 1006271-5
17. AFTER ENCAPSULATING PER NOTE 3, COAT ALL EXPOSED CORE ARRAY AREAS OF FIND NO.1 OR FIND NO. 14, .010 TO .050 THICK, PER ND1002009, METHOD C
18. PRIOR TO ENCAPSULATING PER NOTE 3, COAT OVER ALL DIODE CAVITIES OF FIND NO. 2 OR FIND NO.13 PER ND1002009 METHOD C

2003111 E

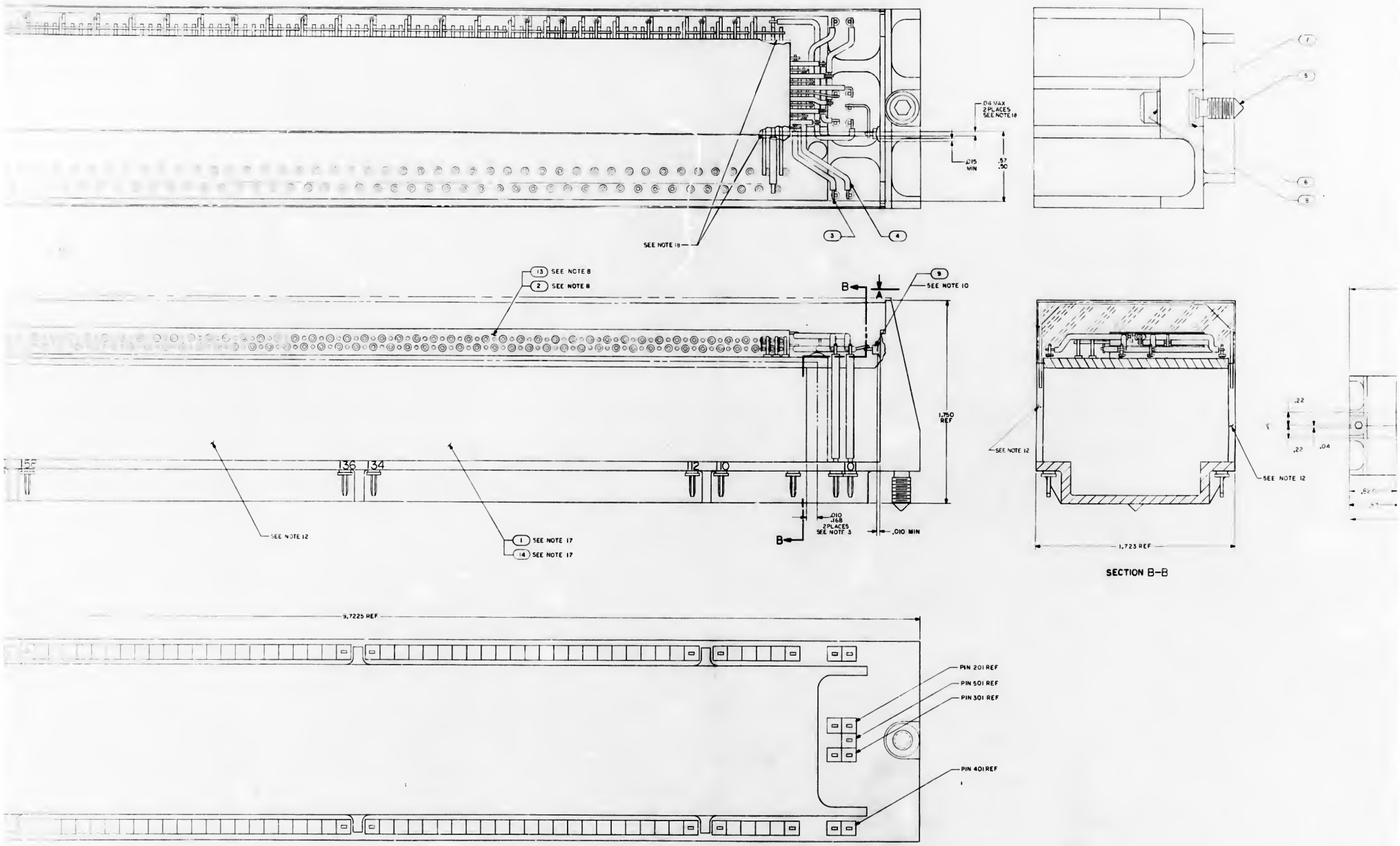
.04 MAX
2 PLACES
SEE NOTE 18
.015
MIN
.57
.50
SEE NOTE 18
3
4
7
5
6
8
13 SEE NOTE 8
2 SEE NOTE 8
9
SEE NOTE 10
B
A
1.750
REF
156
136
134
112
110
101
SEE NOTE 12
1 SEE NOTE 17
14 SEE NOTE 17
.010
.168
2 PLACES
SEE NOTE 3
.010 MIN
B
SEE NOTE 12
SEE NOTE 12
1.723 REF
.22
.22
.04
SECTION B-B
9.7225 REF
PIN 201 REF
PIN 501 REF
PIN 301 REF
PIN 401 REF

2003111 E

REV	ZONE	DESCRIPTION	DR	CHK	DATE	APPROVED
A		REVISED PER TDRR 28160				
B		REVISED PER TDRR 30888				
C		REVISED PER TDRR 32561				
D		REVISED PER TDRR 33701				
E		REVISED PER TDRR 34349				

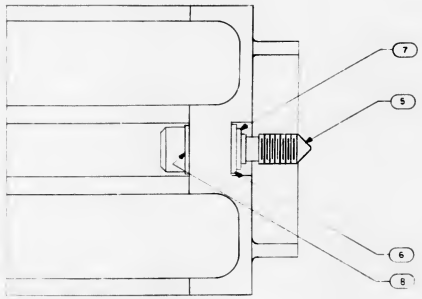

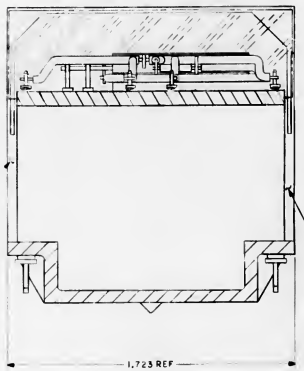

SECTION B-B

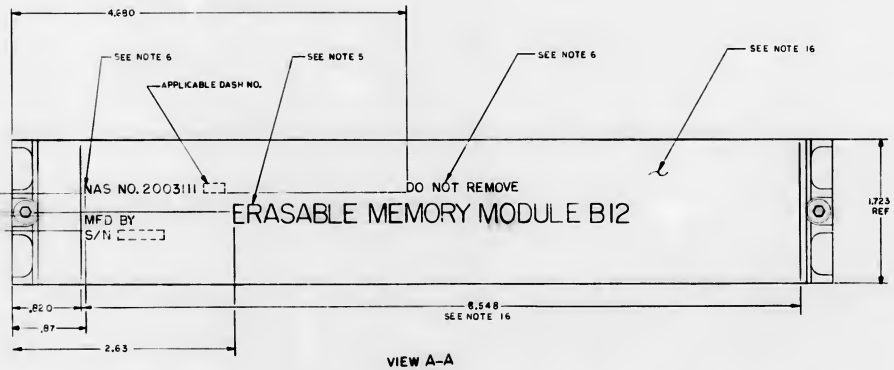

VIEW A-A
SCALE 2/1

QTY REQD	QTY REQD	PART OR IDENTIFYING NO	NOMENCLATURE OR DESCRIPTION	FIND NO
—	—	2005931	SCHEMATIC	REF
—	—	2005106	SCHEMATIC	REF
1	—	2003109-021	CORE STACK ASSY ERASABLE MEMORY	2
1	—	2003112-021	DIODE BLOCK ASSY ERASABLE MEMORY	3
AR	AR	1006767-22	INSULATION SLEEVING ELECTRICAL	16
—	—	SEE NOTE 9	CAPACITOR	11
AR	AR	1006776-20	INSULATION SLEEVING ELECTRICAL	10
1	1	2004039	TERMINAL, THREADED	9
2	2	2004984-001	WASHER, FLAT	8
2	2	MS16633-4015	RING RETAINING, EXTERNAL TE	7
2	2	2004984-003	WASHER, FLAT	6
2	2	1004579-1	SCREW, JACKING	5
AR	AR	1006776-21	INSULATION SLEEVING	4
AR	AR	1006757-8	WIRE, ELECTRICAL	
—	1	2003112-011	DIODE BLOCK ASSY ERASABLE MEMORY	3
—	1	2003109-011	CORE STACK ASSY ERASABLE MEMORY	2

2003111

LIST OF MATERIALS

UNLESS OTHERWISE SPECIFIED
DIMENSIONS ARE IN INCHES
CAPACITOR VALUES ARE IN μf
RESISTOR VALUES ARE IN OHMS
TOLERANCES ON
FRACTIONS DECIMALS ANGLES
± ±.02 ±
DO NOT SCALE THIS DRAWING
MATERIAL

NEXT ASSY	USED ON
2003993	
2003200	

APPLICATION

MIT INSTRUMENTATION LAB
CAMBRIDGE MASS.

DRAWN
CHECKED
APPROVED
APPROVED
APPROVED MIT
APPROVED MSC

MANNED SPACECRAFT CENTER
HOUSTON TEXAS

ERASABLE MEMORY
B12
ASSEMBLY

CODE IDENT NO	SIZE	DRAWING NO
80230	J	2003111

SCALE 4/1 | DATE | SHEET 1 OF 1

F-3/3

2003111 E

2003008

REVISIONS

SYM	DESCRIPTION	DATE	APPROVAL

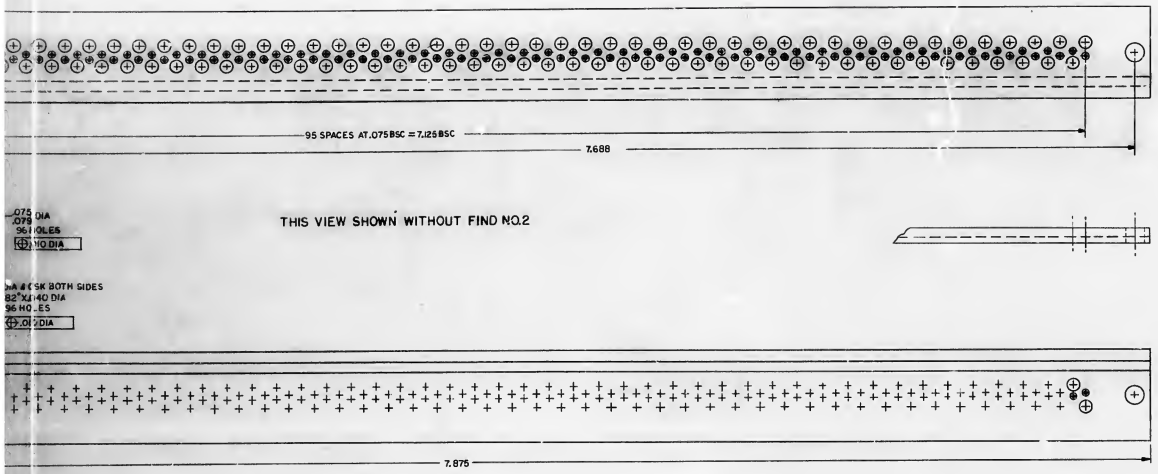

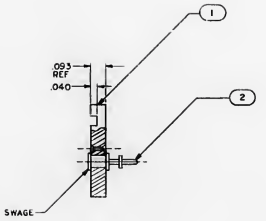

QTY REQD	PART OR IDENTIFYING NO	NOMENCLATURE OR DESCRIPTION	FIND NO
96	2004012	TERMINAL	2
1	2003008-001	PLATE, FEED THRU	1

-011 LIST OF MATERIALS

		UNLESS OTHERWISE SPECIFIED DIMENSIONS ARE IN INCHES TOLERANCES ON FRACTIONS ± — DECIMALS .XX ±.005 .XXX ±.010 ANGLES ± 1° DO NOT SCALE THIS DRAWING	MATERIAL SEE NOTE 2
2003009		HEAT TREATMENT	
NEXT ASSY	USED ON	FINAL FINISH	

BTY INSTRUMENTATION LAB CAMBRIDGE, MASS

DRAWN E. Pellegrini DATE 2-22-65
CHECKED
APPROVAL
APPROVAL Ceb. Oakes 23 Feb 65

NASA APPROVAL W. H. Pike 2-23-65
BIT APPROVAL W. Kaufman

MANNED SPACECRAFT CENTER
HOUSTON, TEXAS

FEED THRU PLATE ASSEMBLY ERASABLE MEMORY

CODE IDENT NO 80230 SIZE J BASIC DRAWING NO 2003008

2003008

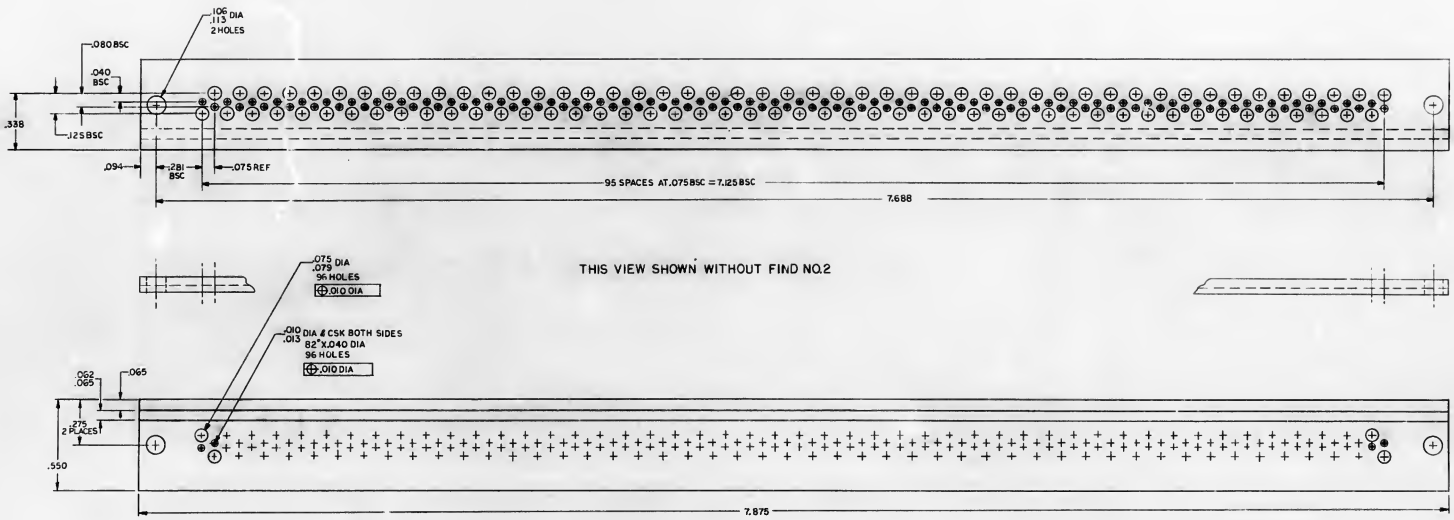

NOTES

1. INTERPRET DRAWING IN ACCORDANCE WITH STANDARDS PRESCRIBED BY MIL-D-70327
2. MATERIAL: PLASTIC SHEET, .093 THICK LAMINATED PER MIL-P-18177 TYPE GEE
3. REMOVE ALL BURRS AND BREAK SHARP EDGES .005/.015
4. ALL FILLETS AND RADII TO BE .010 MAX
5. IDENTIFY WITH DRAWING NUMBER & REVISION PER ND1002019

SWAGE

2003008

REVISIONS

SYM	DESCRIPTION	DATE	APPROVED

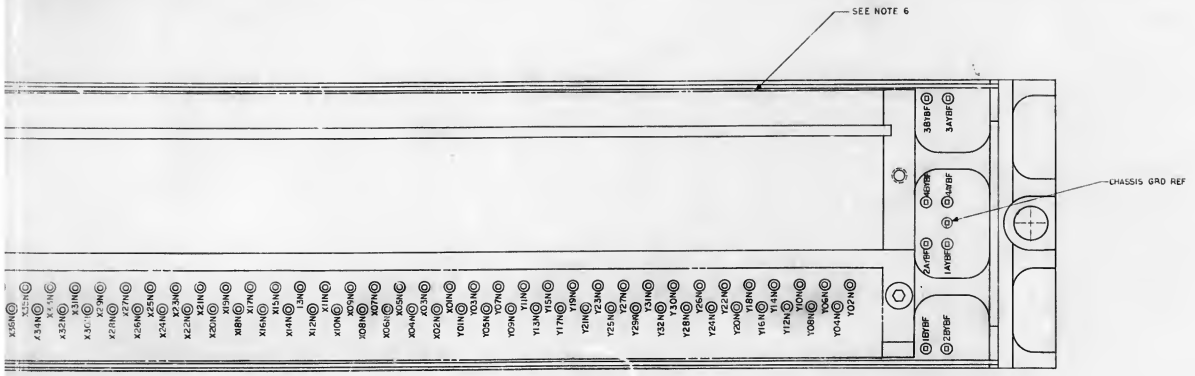

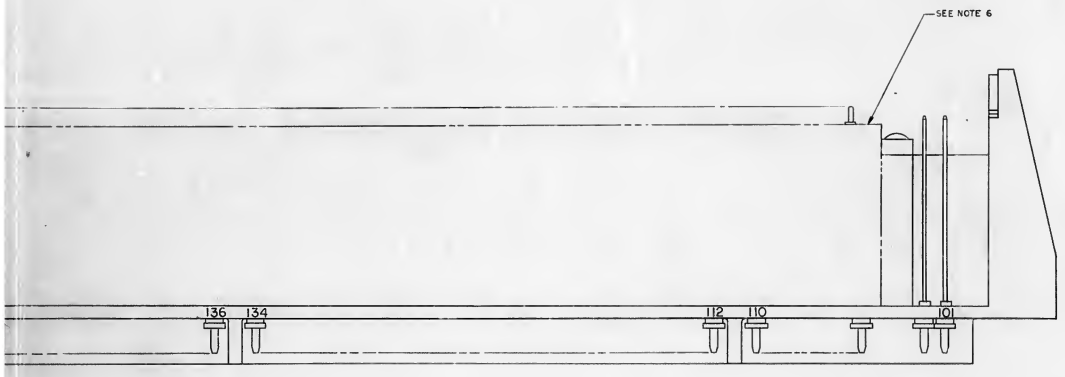

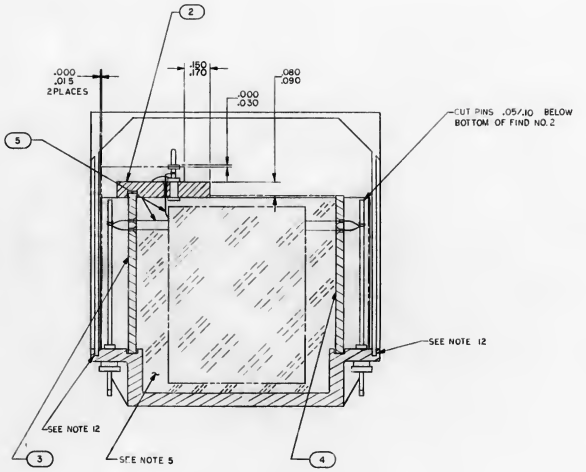

SECTION A-A

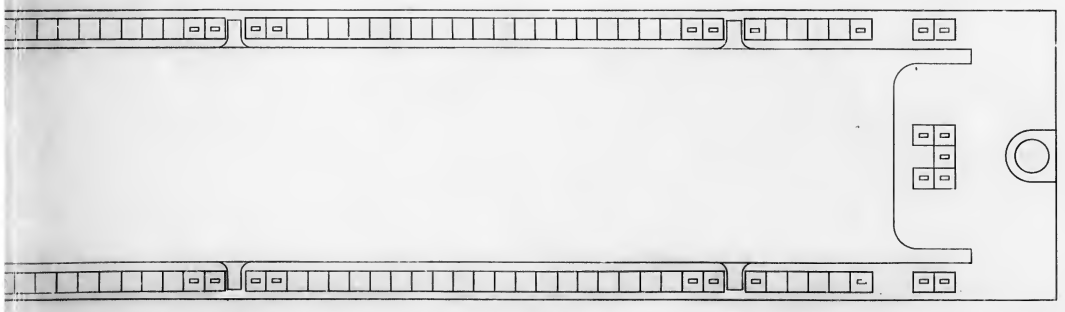

QTY REQD	PART OR IDENTIFYING NO	NOMENCLATURE OR DESCRIPTION	FIND NO
	2005006	SCHEMATIC	REF
32,768	1006786	FERRITE CORE	7
2	1000093-2	SCREW BUTTON HEAD	6
AR	1006711-20	WIRE ELECTRICAL	5
1	2004015	SIDE PLATE B	4
1	2004014	SIDE PLATE A	3
1	2003008-011	FEEDTHRU PLATE ASSEMBLY	2
1	2003010-011	HEADER HOUSING ASSY	1

011 LIST OF MATERIALS

NEXT ASSY	2003011
USED ON	
APPLICATION	

UNLESS OTHERWISE SPECIFIED DIMENSIONS ARE IN INCHES
TOLERANCES ON
FRACTIONS ± DECIMALS ±.005 ANGLES ±
DO NOT SCALE THIS DRAWING
MATERIAL
HEAT TREATMENT
FINAL FINISH

RCA INSTRUMENTATION LAB Camden New Jersey

DRAWN E. Pelizzi DATE
CHECKED
APPROVAL
APPROVAL
NASA APPROVAL
W/T APPROVAL

MANNED SPACECRAFT CENTER
HOUSTON TEXAS

CORE STACK ASSEMBLY
ERASABLE MEMORY

CODE IDENT NO 80230 | SIZE J | NASA DRAWING NO 2003009

SCALE 4/1 | WT | SHEET 1 OF 1

2003009

2003009

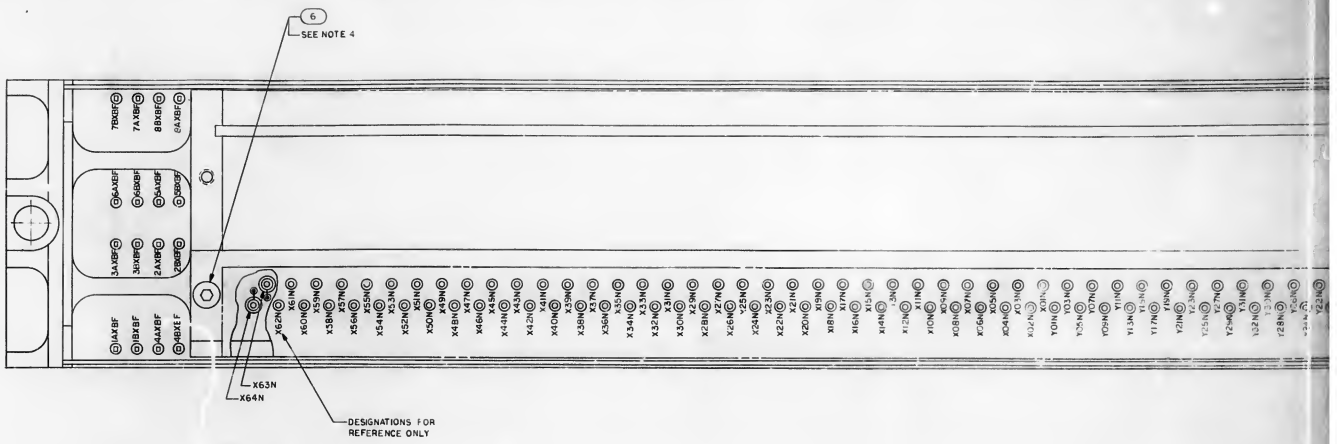

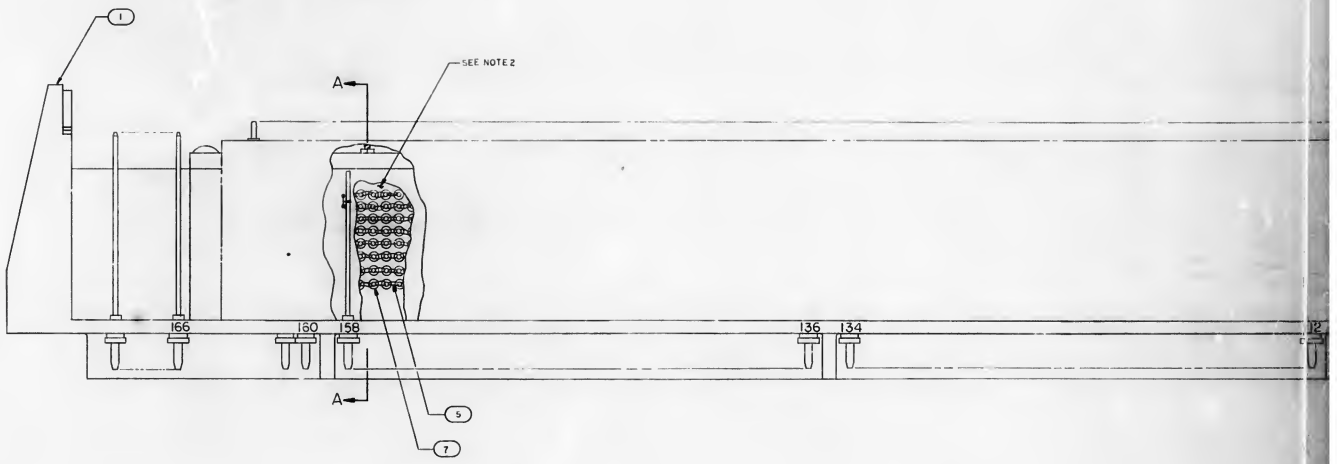

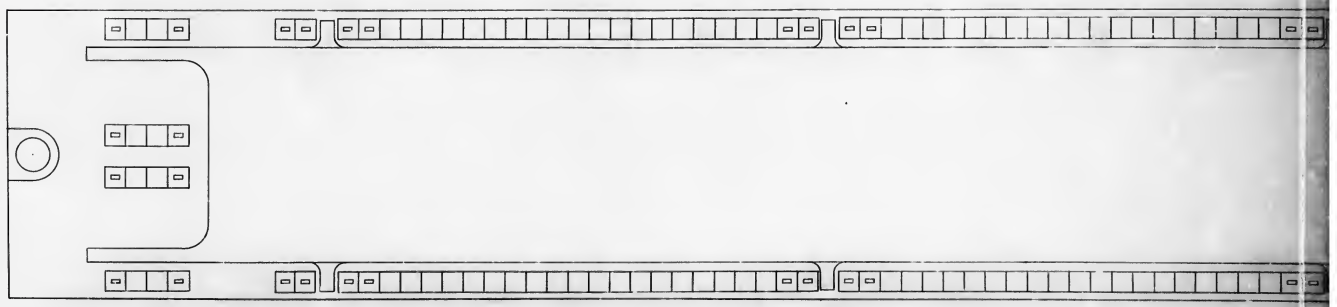

NOTES

1. INTERPRET DRAWING IN ACCORDANCE WITH STANDARDS PRESCRIBED BY MIL-D-70327
2. MATS TO BE FOLDED PER DRAWING NO.2005007 AND ASSEMBLED TO FIND NO.1 SUCH THAT THE Y LINE TERMINATIONS ARE ADJACENT TO THE LINE OF PINS Y02N—Y01N
3. STACK WIRING TERMINATIONS TO BE SOLDERED AS DESIGNATED BY MARKING ON FIND NO.1, FIND NO.2, FIND NO.3 AND FIND NO.4
4. COAT THREADS OF FIND NO.6 WITH WET ZINC CHROMATE PRIMER PER MIL-P-8585
5. ENCAPSULATE PER ND1002009, METHOD F
6. ENCAPSULATE PER ND1002002. REMOVE FLASHING
7. AR DENOTES AS REQUIRED
8. IDENTIFY WITH DRAWING NUMBER & REVISION PER ND1002019
9. THE SOLDERING TECHNIQUE SHALL CONFORM TO ND1002071, EXCEPT THAT A MIN OF 2.5 TURNS & A MAX OF 3.5 TURNS SHALL BE SOLDERED. IN ADDITION 1.5 TURNS MIN SHALL BE LEFT UNSOLDERED FOR STRESS RELIEF PURPOSES
10. COMPLETED ASSEMBLY SHALL BE TESTED IN ACCORDANCE WITH AND SHALL MEET ALL OF THE REQUIREMENTS OF PS2003009
11. X & Y WIRES SHALL BE CONTINUOUS THROUGHOUT THE 16 DIGIT PLANES. SENSE & INHIBIT WIRES SHALL BE CONTINUOUS IN EACH DIGIT PLANE. NO SPLICES ARE ALLOWED
12. GROOVES TO BE FREE OF ENCAPSULANT

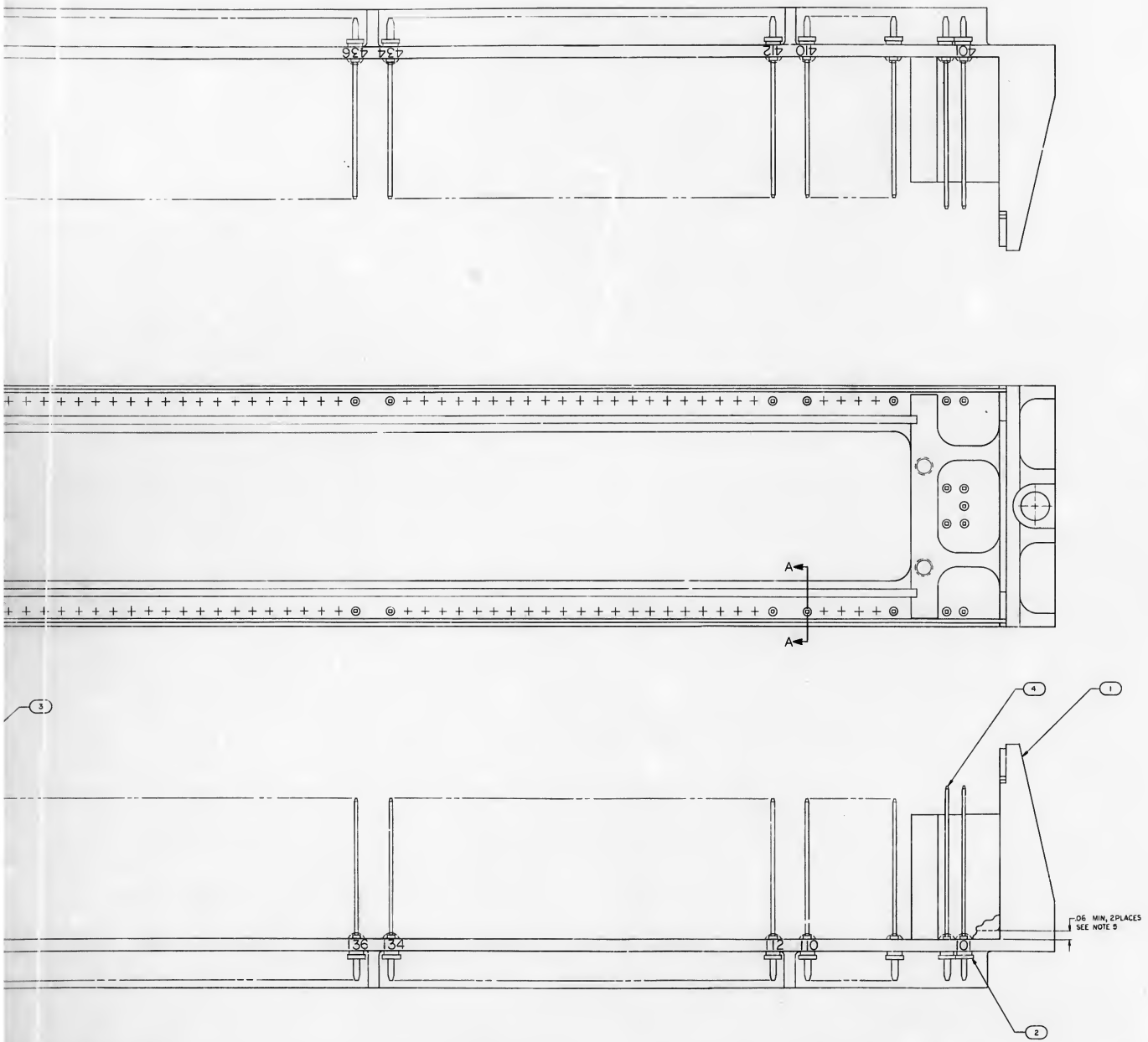

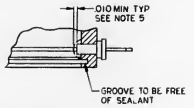

SECTION A-A

QTY REQ'D	PART OR IDENTIFYING NO	NOMENCLATURE OR DESCRIPTION	FUNCT NO
25	1006782-5	CONTACT WRAPOST-MALE MINAT	4
108	1006782-4	CONTACT WRAPOST-MALE MINAT	3
133	1006775	INSULATOR WRAPOST-MALE MINAT	2
1	2004026	HEADER HOUSING	1

-011 LIST OF MATERIALS

2003009			
NEXT ASSY	USED ON		
APPLICATION			

UNLESS OTHERWISE SPECIFIED DIMENSIONS ARE IN INCHES
TOLERANCES ON
FRACTIONS ± DECIMALS ± ANGLES ±
DO NOT SCALE THIS DRAWING
MATERIAL
HEAT TREATMENT
FINAL FINISH

M.I.T. INSTRUMENTATION LAB CAMBRIDGE MASS
DRAWN DATE
CHECKED
APPROVAL
APPROVAL
NASA APPROVAL
MIT APPROVAL

MANNED SPACECRAFT CENTER
HOUSTON TEXAS

HEADER HOUSING ASSY
ERASABLE MEMORY

CODE IDENT NO. 80230 | SIZE J | NASA DRAWING NO. 2003010
SCALE 4/1 | WT | SHEET 1 OF 8

2003010

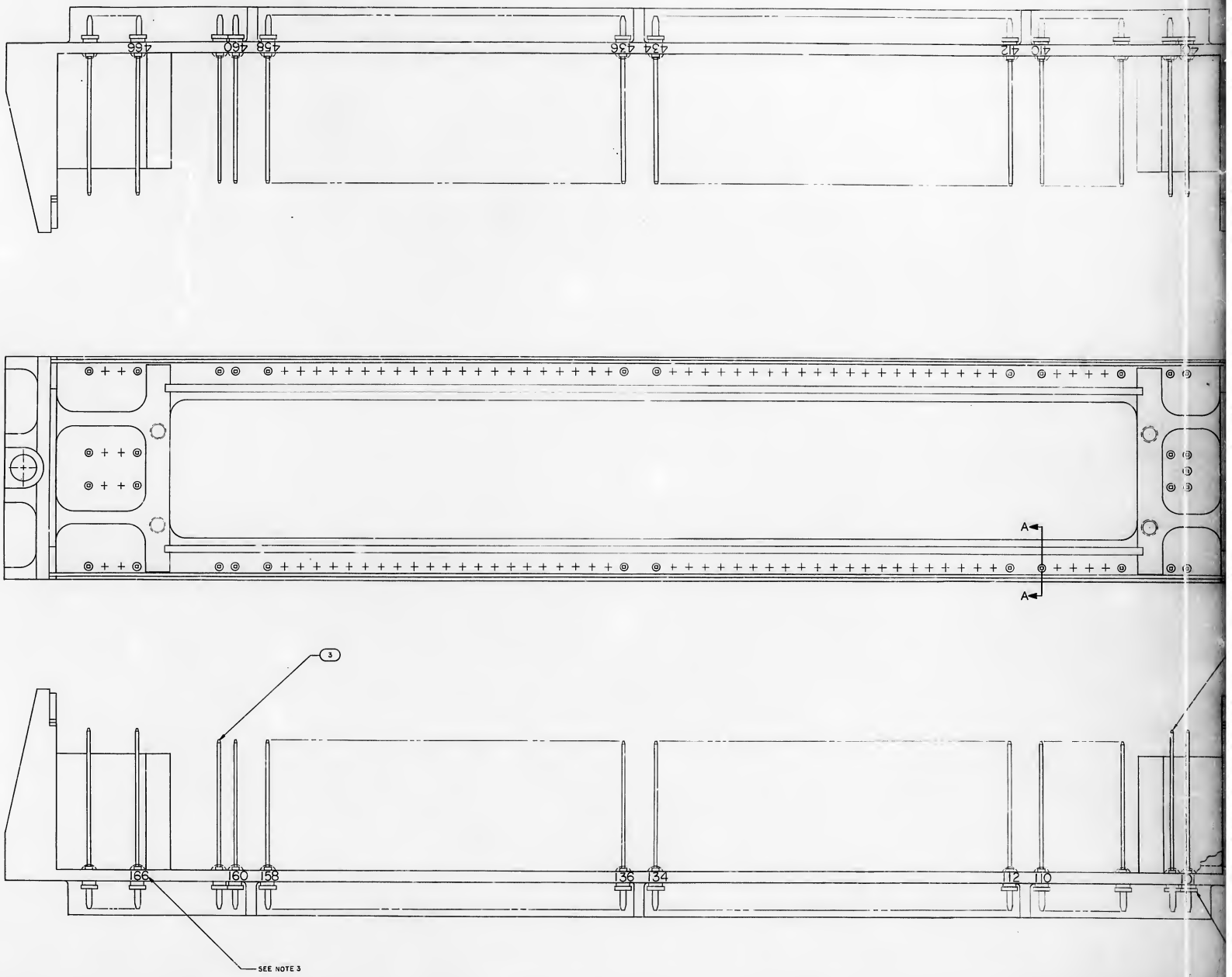

NOTES:

1. INTEPRET DRAWING IN ACCORDANCE WITH STANDARDS PRESCRIBED BY MIL-D-70327
2. ASSEMBLE FIND NO.2, FIND NO.3, AND FIND NO.4 TO FIND NO.1 PER ND1002136
3. MARK .08/.06 HIGH WHITE CHARACTERS PER ND1002122 TYPE II CLASS I PER ND1002019 USING INK PER 1006271-1
4. IDENTIFY WITH DRAWING NUMBER & REVISION PER ND1002019
5. SEAL FIND NO.2, 3 & 4 TO FIND NO.1 PER ND1002004, TYPE XI

2003010

2003012 A

SYM	REVISIONS	DATE	APPROVAL
A	REVISED PER TORR		

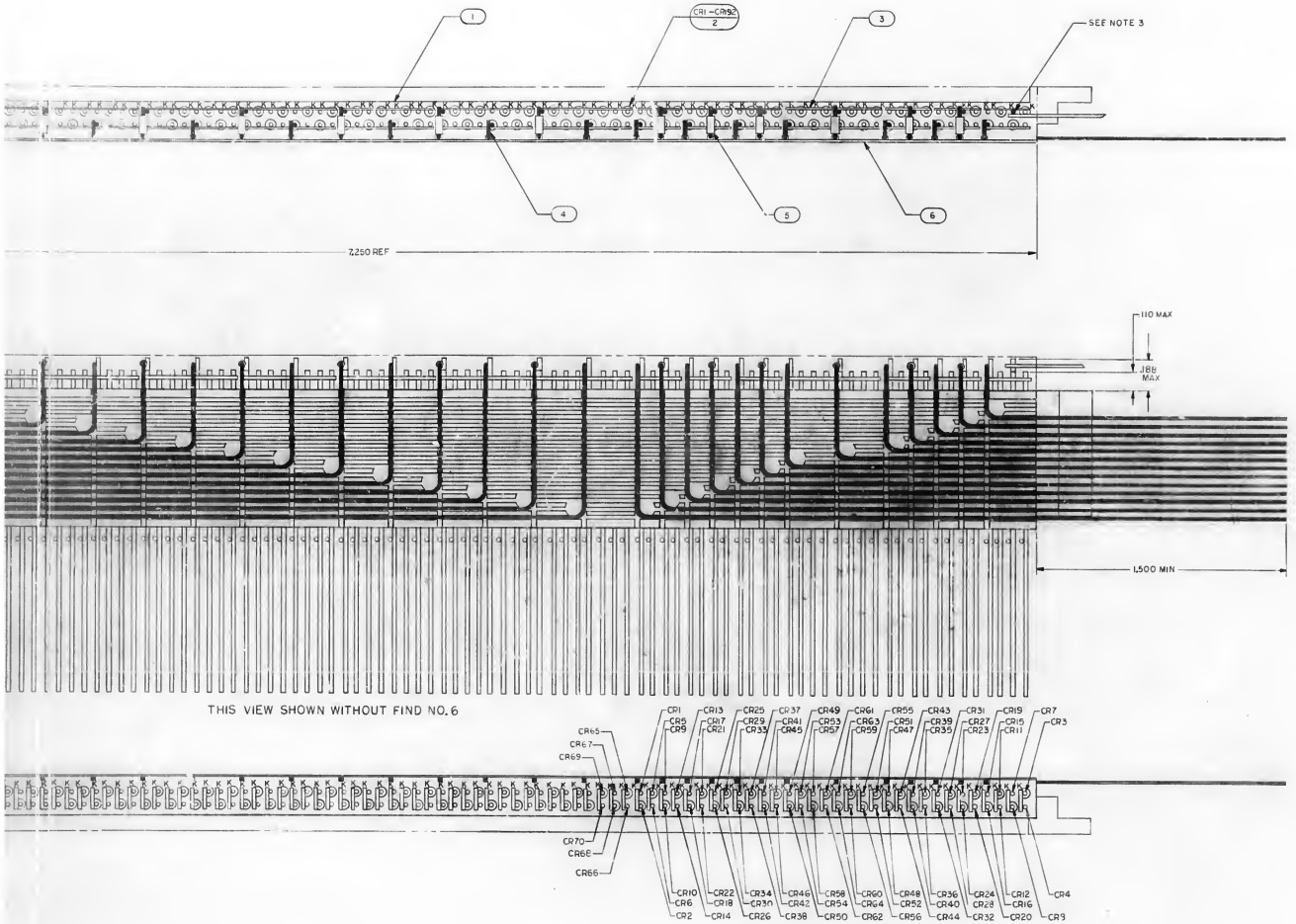

	2005006	SCHEMATIC	REF.
AR	1006849-12	INSULATION TAPE	6
AR	1006776-22	INSULATION SLEEVING	5
AR	1006757-8	WIRE ELECTRICAL	4
AR	1006757-1	WIRE ELECTRICAL	3
192	2004103	DIODE, SILICON RECTIFIER	2
1	2004016	DIODE BLOCK	
QTY REQD	PART OR IDENTIFYING NO	NOMENCLATURE OR DESCRIPTION	FIND NO
-011	LIST OF MATERIALS		

UNLESS OTHERWISE SPECIFIED DIMENSIONS ARE IN INCHES
TOLERANCES ON
FRACTIONS ± DECIMALS ± ANGLES ±
DO NOT SCALE THIS DRAWING
MATERIAL
HEAT TREATMENT
FINAL FINISH

2003011
NEXT ASSY
USED ON

M.I.T.
INSTRUMENTATION LAB
CAMBRIDGE 39, MASS.

DRAWN
CHECKED
APPROVAL
APPROVAL

MANN'D SPACECRAFT CENTER
HOUSTON, TEXAS

DIODE BLOCK ASSEMBLY
ERASABLE MEMORY

NASA APPROVAL

CODE IDENT NO 80230 SIZE J NASA DRAWING NO 2003012

2003012 A

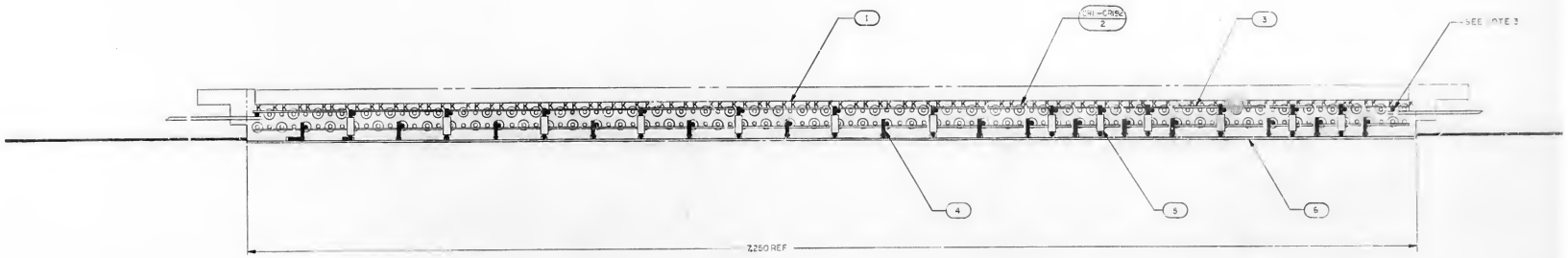

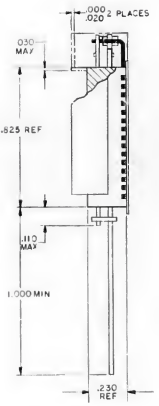

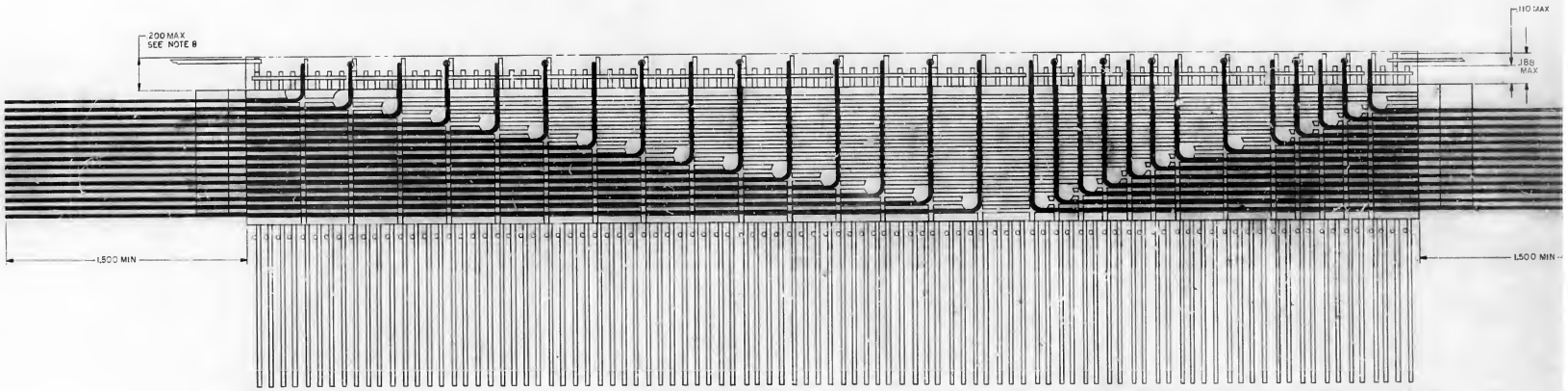

THIS VIEW SHOWN WITHOUT FIND NO. 6

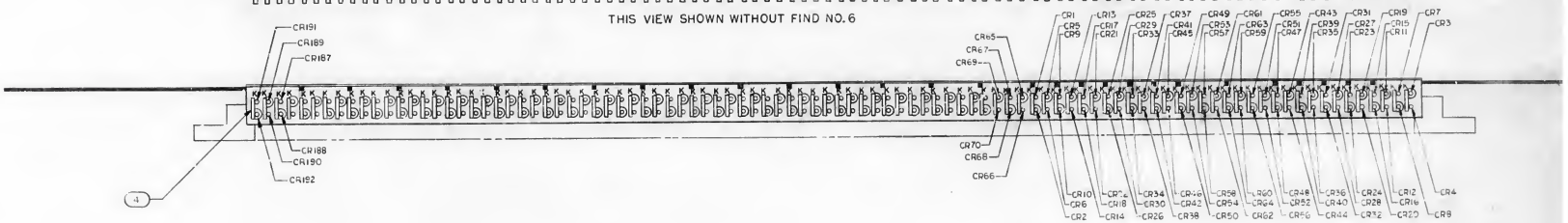

NOTES:

1. INTERPRET DRAWING IN ACCORDANCE WITH STANDARDS PRESCRIBED BY MIL-D-70327
2. WELD PER ND1002005
3. ■ BLACK DOTS INDICATES UPPER LEVEL WIRING
4. ⊢ DENOTES CATHODE SIDE OF DIODES
5. AP DENOTES AS REQUIRED
6. STAKE ALL DIODES PER ND1002009, METHOD C OR D
7. IDENTIFY WITH DRAWING NUMBER & REVISION PER ND1002019
8. ENCAPSULATE PER
9. UNLESS OTHERWISE SPECIFIED ALL WIRING SHALL BE IN ACCORDANCE WITH ND1002069

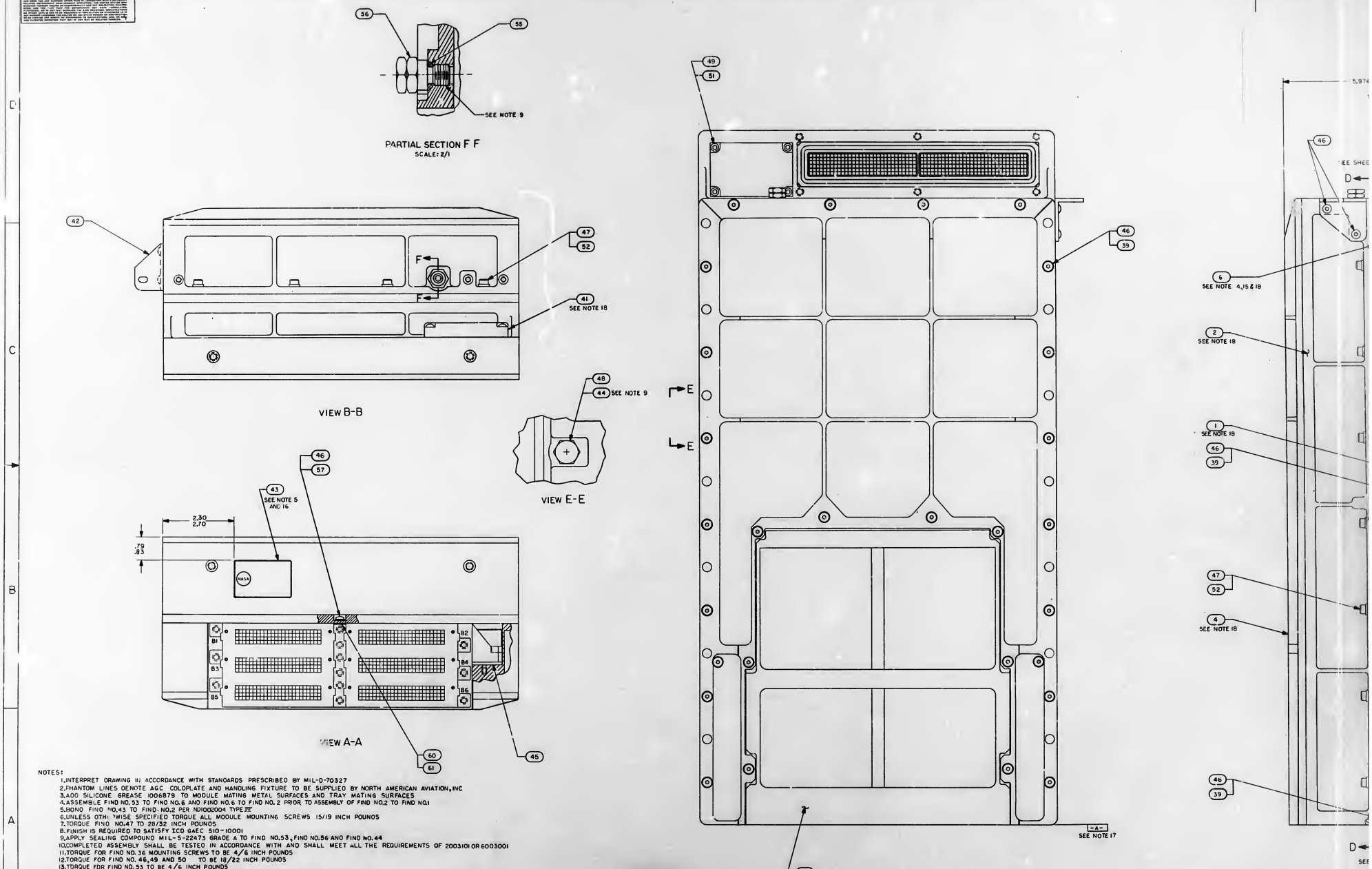

NOTES:

1. INTERPRET DRAWING IN ACCORDANCE WITH STANDARDS PRESCRIBED BY MIL-D-70327
2. PHANTOM LINES DENOTE AGC COLDPLATE AND HANDLING FIXTURE TO BE SUPPLIED BY NORTH AMERICAN AVIATION, INC
3. ADD SILICONE GREASE 1006879 TO MODULE MATING METAL SURFACES AND TRAY MATING SURFACES
4. ASSEMBLE FIND NO. 53 TO FIND NO. 6 AND FIND NO. 6 TO FIND NO. 2 PRIOR TO ASSEMBLY OF FIND NO. 2 TO FIND NO. 1
5. BOND FIND NO. 43 TO FIND NO. 2 PER ND1002004 TYPE II
6. UNLESS OTHERWISE SPECIFIED TORQUE ALL MODULE MOUNTING SCREWS 15/19 INCH POUNDS
7. TORQUE FIND NO. 47 TO 28/32 INCH POUNDS
8. FINISH IS REQUIRED TO SATISFY ICD GAEC 510-10001
9. APPLY SEALING COMPOUND MIL-S-22473 GRADE A TO FIND NO. 53, FIND NO. 56 AND FIND NO. 44
10. COMPLETED ASSEMBLY SHALL BE TESTED IN ACCORDANCE WITH AND SHALL MEET ALL THE REQUIREMENTS OF 2003101 OR 6003001
11. TORQUE FOR FIND NO. 36 MOUNTING SCREWS TO BE 4/6 INCH POUNDS
12. TORQUE FOR FIND NO. 46, 49 AND 50 TO BE 18/22 INCH POUNDS
13. TORQUE FOR FIND NO. 53 TO BE 4/6 INCH POUNDS
14. TORQUE FOR FIND NO. 44 TO BE 140/160 INCH POUNDS
15. FIND NO. 40 SHALL BE SUPPLIED AS PART OF THIS ASSEMBLY
16. MARK "COMPUTER ASSEMBLY" AND RELATED PART NO., APPLICABLE DASH NO., SERIAL NO. AND CONTRACT NO. PER 1004250 AND SERIALIZE PER ND1002023
17. FINISH SURFACE [-A-] PER ICD NAA MH01-01302-116 THIS ASSEMBLY MUST BE CAPABLE OF MEETING ELECTRICAL BONDING REQUIREMENTS OF ICD NAA MH01-01302-116
18. FIND NO. 1 THRU 6 AND FIND NO. 41 TO BE ELECTRICALLY BONDED, RESISTANCE BETWEEN ANY TWO ITEMS TO BE LESS THAN 10 MILLI OHMS
19. LEAK TEST: PURGE AND FILL WITH 30 ± 1.0 PSIA DRY NITROGEN, STORE AT ROOM AMBIENT FOR 24 ± 5 HOURS. TEST PRESSURE FOR $\Delta P < 0.5$ PSIA. ALL MEASUREMENTS MADE AT STANDARD TEMPERATURE ± 2°C TEST SHALL BE PREFORMED WITH 2001400 INSTALLED. FOLLOWING TEST BLEED TO 17 ± 1.0 PSIA

F 1

2003200

REVISIONS 23977					
SYM	ZONE	DESCRIPTION	DR	CHK	DATE	APPROVED

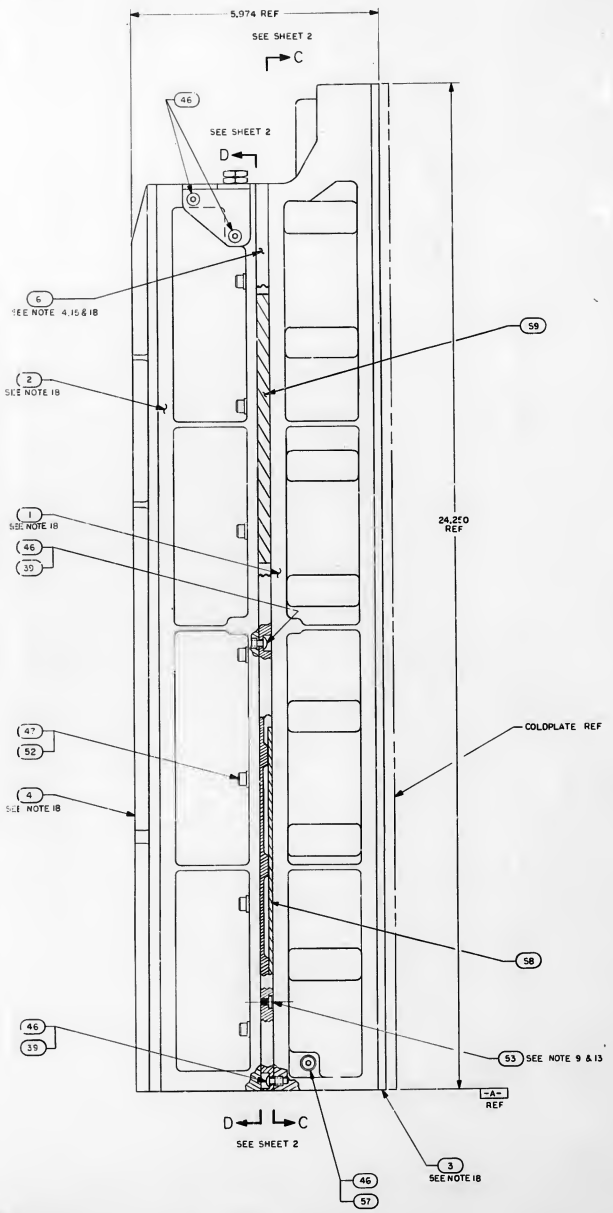

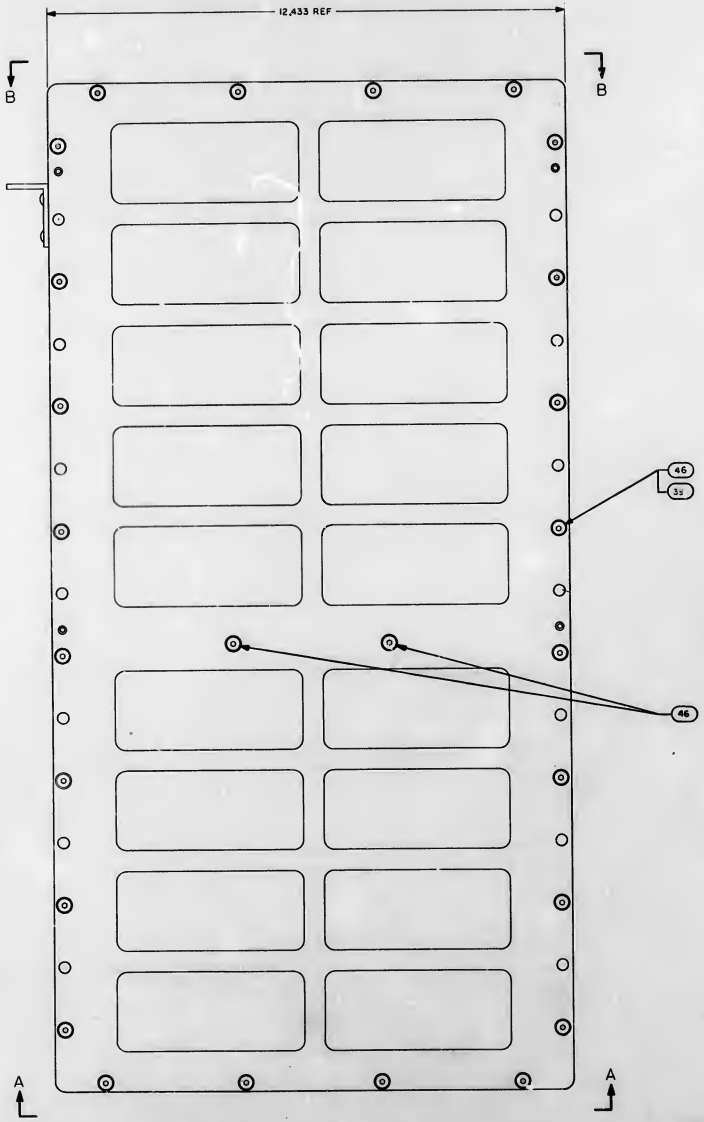

	2005036	AGC WIRE LIST	REF
AR	2004895-002	SHIM AGC	61
AR	2004895-001	SHIM AGC	60
1	2004899-002	PAD VIABRATION	59
1	2004899-001	PAD VIABRATION	58
4	NAS598-008N	WASHER,SEALING	57
1	2018773	VALVE PRESSURE ASSEMBLY	56
1	1000159-5	PACKING,PREFORMED "O" RING	55
2	2004984-001	WASHER, FLAT	54
8	2004985	PAD,THREADED	53
18	2004894-014	WASHER, FLAT	52
4	2004894-012	WASHER, FLAT	51
2	1001489-34	SCREW,HEX SOCKET HEAD	50
4	1004722-2	SCREW, CAPTIVE	49
1	1000159-7	PACKING,PREFORMED "O" RING	48
18	M516996-14	SCREW,SOCKET HEAD,CAP	47
66	1006783-25	SCREW, BUTTON HEAD, HEX SOCKET	46
2	1006347	GASKET, PLATE	45
1	2004986	PLUG,MACHINE THREAD	44
1	1004260-19	NAME PLATE,TYPE I	43
1	2004987	BRACKET, CABLE	42
1	2004988	COVER,POTTED	41
1	1006380	GASKET,RETAINED	40
58	2004148-005	WASHER,FLAT	39
3	2003067-031	INTERFACE MODULE A27-29	38
2	2003070-021	INTERFACE MODULE A25-26	37
2	2003953-011	POWER SUPPLY MODULE A30-31	36
1	2003121-231	LOGIC MODULE A24	35
1	2003121-221	LOGIC MODULE A23	34
1	2003121-211	LOGIC MODULE A22	33
1	2003121-191	LOGIC MODULE A21	32
1	2003121-181	LOGIC MODULE A20	31
1	2003121-171	LOGIC MODULE A19	30
1	2003121-161	LOGIC MODULE A18	29
1	2003121-151	LOGIC MODULE A17	28
1	2003121-141	LOGIC MODULE A16	27
1	2003121-131	LOGIC MODULE A15	26
1	2003121-121	LOGIC MODULE A14	25
1	2003121-111	LOGIC MODULE A13	24
1	2003121-091	LOGIC MODULE A12	23
4	2003121-081	LOGIC MODULE A8-11	22
1	2003121-071	LOGIC MODULE A7	21
1	2003121-061	LOGIC MODULE A6	20
1	2003121-051	LOGIC MODULE A5	19
1	2003121-041	LOGIC MODULE A4	18
1	2003121-031	LOGIC MODULE A3	17
1	2003121-021	LOGIC MODULE A2	16
1	2003121-011	LOGIC MODULE A1	15
2	2003140-011	ROPE DRIVER MODULE B16-17	14
1	2003027-021	STRAND SELECT MODULE B15	13
2	2003043-021	SENSE AMPLIFIER MODULE B13-14	12
1	2003111-011	ERASABLE MEMORY MODULE B12	11
1	2003026-021	CURRENT SWITCH MODULE B11	10
2	2003114-011	ERASABLE DRIVER MODULE B9-10	9
1	2003169-021	ALARM MODULE B8	8
1	2003036-021	OSCILLATOR MODULE B7	7
1	1006381-001	GASKET,RETAINED	6
1	2003059-021	INTERCONNECTION HEADER ASSEMBLY	5
1	1006378-001	GASKET,RETAINED	4
1	1006379-001	GASKET,RETAINED	3
1	2003093-011	TRAY B WIRED ASSEMBLY	2
1	2003092-011	TRAY A WIRED ASSEMBLY	1
QTY REQD	PART OR IDENTIFYING NO.	NOMENCLATURE OR DESCRIPTION	ITEM NO.

-011 LIST OF MATERIALS

6003001		
2003101		
NEXT IN BY	USED ON	
APPLICATION		

UNLESS OTHERWISE SPECIFIED DIMENSIONS ARE IN INCHES
CAPACITOR VALUES ARE IN μf
RESISTOR VALUES ARE IN OHMS
TOLERAN .225 OR
FRACTIONS DECIMALS ANGLES
dr —— dr —— B ——
DO NOT SCALE THIS DRAWING
MATERIAL
—

MIT INSTRUMENTATION LAB CAMBRIDGE, MASS.
DRAWN
CHECKED
APPROVED
APPROVED
APPROVED MIT
APPROVED NASA
D. G. HOYT
C. C. HOTCHKISS

MANNED SPACECRAFT CENTER HOUSTON, TEXAS

COMPUTER ASSEMBLY

CODE IDENT NO.	SIZE	DRAWING NO.
80230	J	2003200
SCALE 1/1		SHEET 1 OF 2

F 2

2003200


POWER SUPPLY MODULE A30-31
INTERFACE MODULE A27-29
INTERFACE MODULE A27-29
INTERFACE MODULE A27-29
INTERFACE MODULE A25-26
INTERFACE MODULE A25-26
LOGIC MODULE A24
LOGIC MODULE A23
LOGIC MODULE A22
LOGIC MODULE A21
LOGIC MODULE A20
LOGIC MODULE A19
LOGIC MODULE A18
LOGIC MODULE A17
LOGIC MODULE A16
POWER SUPPLY MODULE A30-31
DO NOT REMOVE MODULE WHILE POWER IS ON
LOGIC MODULE A15
LOGIC MODULE A14
LOGIC MODULE A13
LOGIC MODULE A12
LOGIC MODULE A8-11
LOGIC MODULE A8-11
LOGIC MODULE A8-11
LOGIC MODULE A8-11
LOGIC MODULE A7
LOGIC MODULE A6
LOGIC MODULE A5
LOGIC MODULE A4
LOGIC MODULE A3
LOGIC MODULE A2
LOGIC MODULE A1
SEE NOTE 15
SECTION C-C

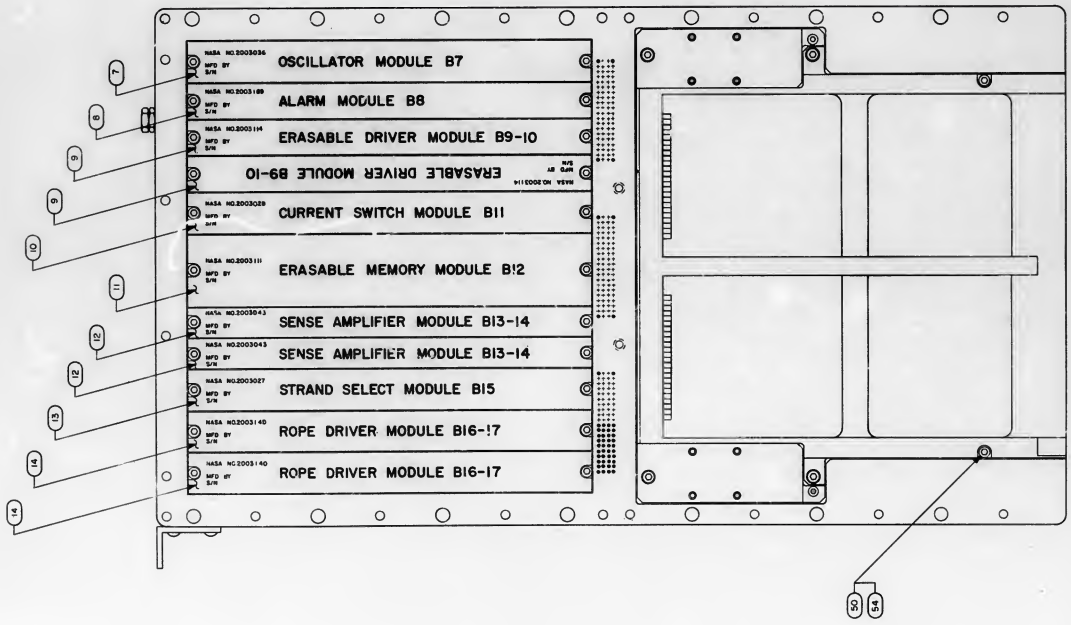
OSCILLATOR MODULE B7
ALARM MODULE B8
ERASABLE DRIVER MODULE B9-10
ERASABLE DRIVER MODULE B9-10
CURRENT SWITCH MODULE B11
ERASABLE MEMORY MODULE B12
SENSE AMPLIFIER MODULE B13-14
SENSE AMPLIFIER MODULE B13-14
STRAND SELECT MODULE B15
ROPE DRIVER MODULE B16-17
ROPE DRIVER MODULE B16-17
SECTION D-D

2003200

REVISIONS						
SYM	ZONE	DESCRIPTION	DR	CHK	DATE	APPROVED

25477

QTY REQD	PART OR IDENTIFYING NO.	NOMENCLATURE OR DESCRIPTION	FIND NO.
		LIST OF MATERIALS	

UNLESS OTHERWISE SPECIFIED DIMENSIONS ARE IN INCHES
CAPACITOR VALUES ARE IN μf
RESISTOR VALUES ARE IN OHMS
TOLERANCES ON
FRACTIONS DECIMALS ANGLES
± — ± — ± —
DO NOT SCALE THIS DRAWING
MATERIAL

NEXT ASSY | USED ON
APPLICATION

MIT INSTRUMENTATION LAB
CAMBRIDGE, MASS.

DRAWN
CHECKED
APPROVED
APPROVED
APPROVED MIT
APPROVED NASA

MANNED SPACECRAFT CENTER
HOUSTON, TEXAS

COMPUTER ASSEMBLY

CODE IDENT NO.	SIZE	DRAWING NO.
80230	J	2003200

DATE | SCALE 1/1 | SHEET 2 OF 2

2003200

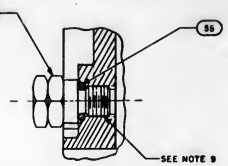

PARTIAL SECTION F F
SCALE: 2/1

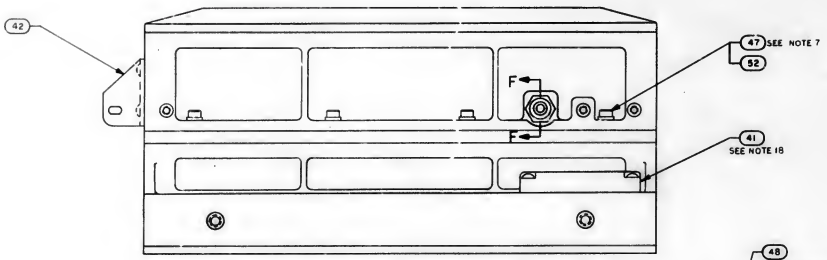

VIEW B-B

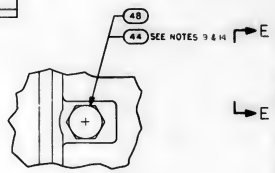

VIEW E-E

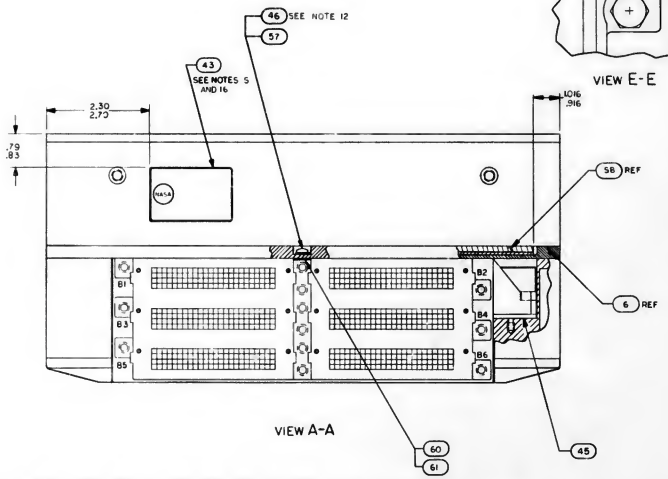

VIEW A-A

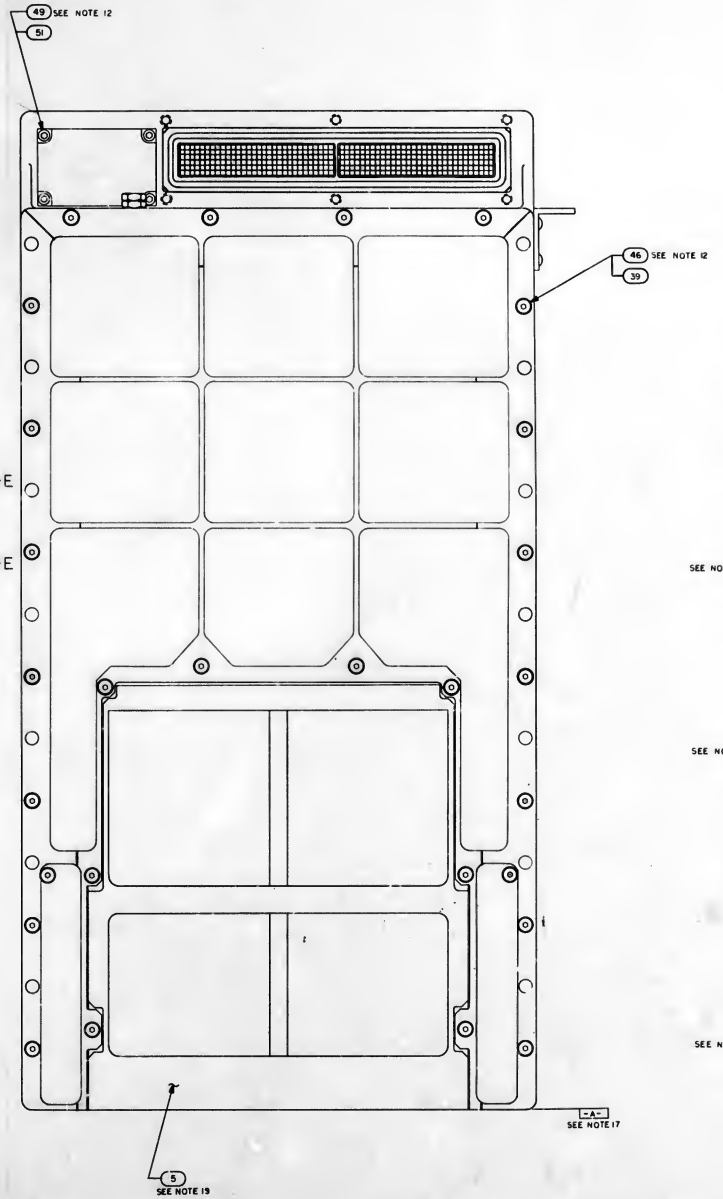

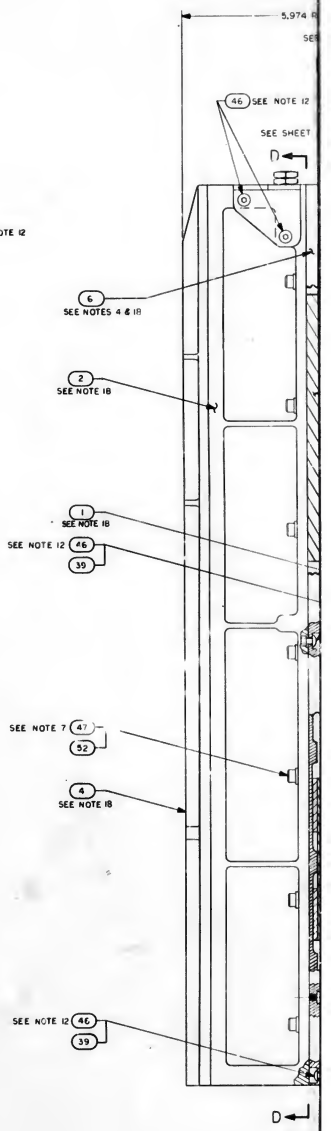

NOTES:

1. INTERPRET DRAWING IN ACCORDANCE WITH STANDARDS PRESCRIBED BY MIL-D-70327
2. PHANTOM LINES DENOTE AGC COLDPLATE AND HANDLING FIXTURE TO BE SUPPLIED BY NORTH AMERICAN AVIATION, INC
3. ADD SILICONE GREASE 1006879 TO MODULE MATING METAL SURFACES AND TRAY MATING SURFACES
4. ASSEMBLE FIND NO.53 AND FIND NO.63 TO FIND NO.6 AND FIND NO.6 TO FIND NO.2 PRIOR TO ASSEMBLY OF FIND NO.2 TO FIND NO.1
5. BOND FIND NO.43 TO FIND NO.1 PER NO1002004 TYPE II
6. UNLESS OTHERWISE SPECIFIED TORQUE ALL MODULE MOUNTING SCREWS 15/19 INCH POUNDS
7. TORQUE FIND NO.47 TO 28/32 INCH POUNDS
8. FINISH IS REQUIRED TO SATISFY ICD GAEC 510-10001
9. APPLY SEALING COMPOUND MIL-S-22473 GRADE A TO FIND NO.53, FIND NO.56 AND FIND NO.44
10. COMPLETED ASSEMBLY SHALL BE TESTED IN ACCORDANCE WITH AND SHALL MEET ALL THE REQUIREMENTS OF 2003101 OR 6003001
11. TORQUE FOR FIND NO.36 MOUNTING SCREWS TO BE 4/6 INCH POUNDS
12. TORQUE FOR FIND NO.46, 49 AND 50 TO BE 18/22 INCH POUNDS
13. TORQUE FOR FIND NO.53 TO BE 4/6 INCH POUNDS
14. TORQUE FOR FIND NO.44 AND FIND NO.56 TO BE 137/157 INCH POUNDS
15. FIND NO.40 SHALL BE SUPPLIED AS PART OF THIS ASSEMBLY
16. MARK COMPUTER ASSEMBLY AND RELATED PART NO., APPLICABLE DASH NO., SERIAL NO. AND CONTRACT NO. PER 1004260 AND SERIALIZE PER NO 1002023
17. FINISH SURFACE [-A-] PER ICD NAA MH01-01302-116 THIS ASSEMBLY MUST BE CAPABLE OF MEETING ELECTRICAL BONDING REQUIREMENTS OF ICD NAA MH01-01302-116
18. FIND NO.1 THRU 6 AND FIND NO.41 TO BE ELECTRICALLY BONDED, RESISTANCE BETWEEN ANY TWO ITEMS TO BE LESS THAN 10 MILLI OHMS
19. LEAK TEST: PURGE AND FILL WITH 30± 10 PSIA DRY NITROGEN. STORE AT ROOM AMBIENT FOR 24± 5 HOURS. TEST PRESSURE FOR Δ P < 0.5 PSIA. ALL MEASUREMENTS MADE AT STANDARD TEMPERATURE ±2°C TEST SHALL BE PREFORMED WITH 2004100 INSTALLED. FOLLOWING TEST BLEED TO 17 ± 1.0 PSIA

20. BOND FIND NO.56 TO FIND NO.6 IN POSITION SHOWN, USING 1006338

2003200	A

SHEET 1

REVISIONS					
SYM	ZONE	DESCRIPTION	DR	CHK	DATE
A		REVISED PER TDRR 28062			

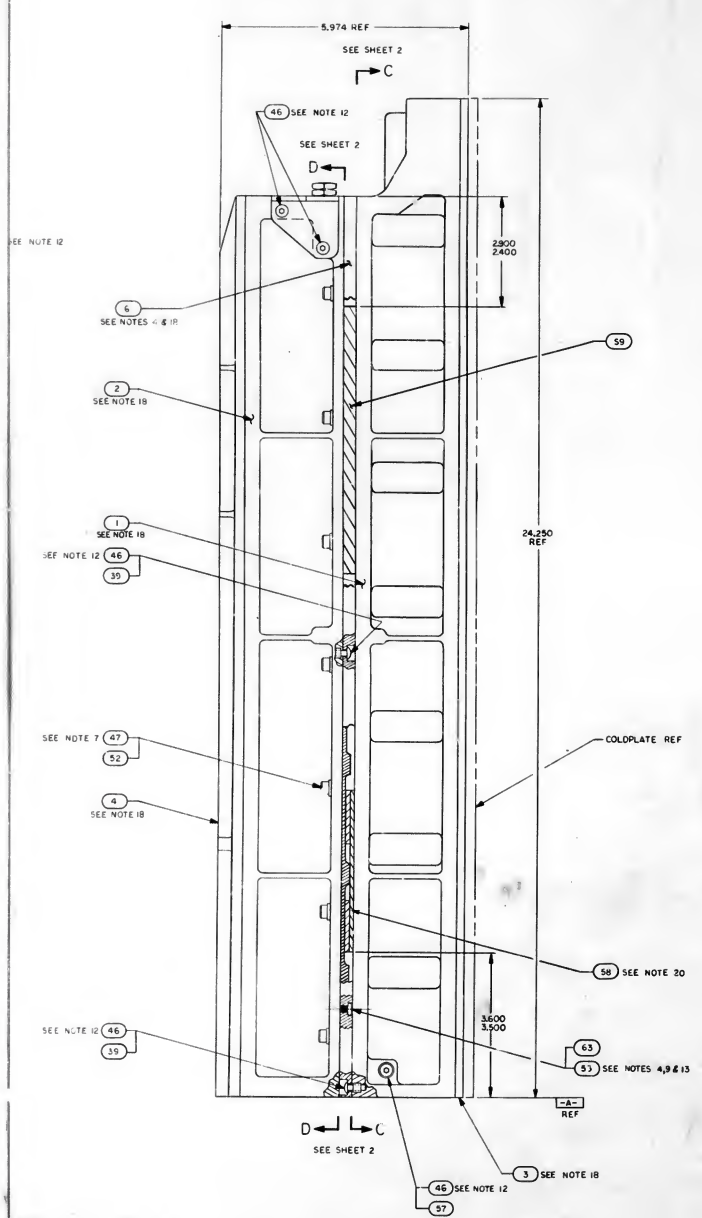

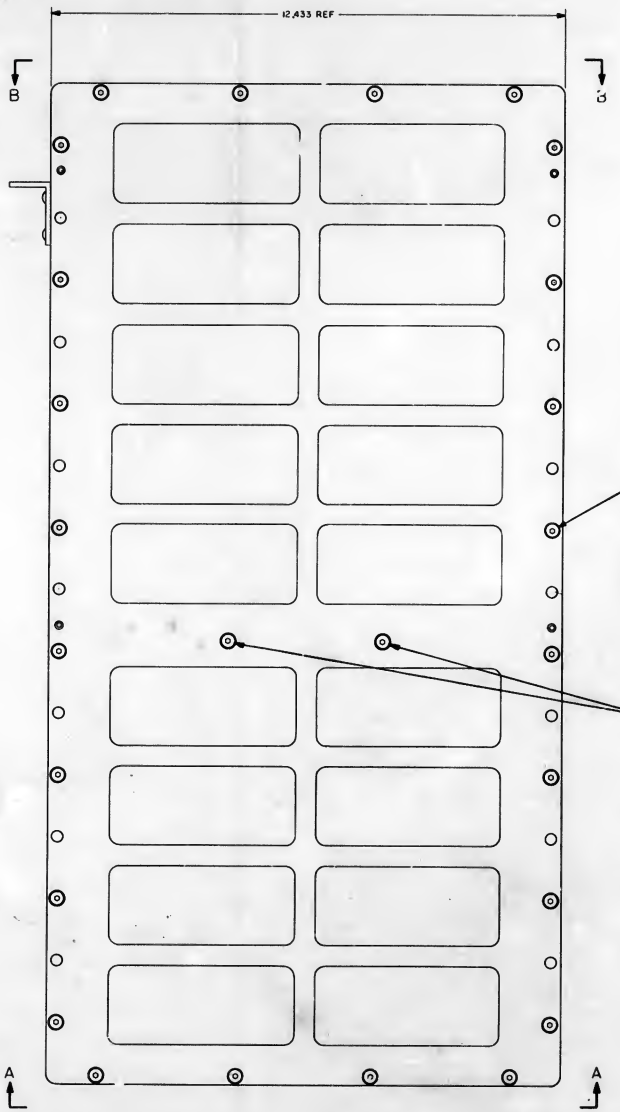

	2005036	AGC WIRE LIST	REF
10	2004148-007	WASHER, FLAT	63
1	2003981-011	SENSE AMPLIFIER MODULE, ERASABLE MEMORY B12	62
AR	2004895-002	SHIM AGC	
AR	2004895-001	SHIM AGC	60
1	2004899-001	PAD VIBRATION	59
1	2CJ3970	VIBRATION PAD ASSY	58
4	NAS598-008N	WASHER, SEALING	57
1	2018773	VALVE PRESSURE ASSY	56
1	1000159-5	PACKING, PREFORMED "O" RING	55
2	2004984-001	WASHER, FLAT	54
8	2004130	PAD, THREADED	53
18	2004894-014	WASHER, FLAT	52
4	2004894-012	WASHER, FLAT	51
2	1001489-34	SCREW, HEX SOCKET HEAD	50
4	1004722-2	SCREW, CAPTIVE	49
1	1000159-7	PACKING, PREFORMED "O" RING	48
18	MS16996-14	SCREW, SOCKET HEAD, CAP	47
66	1006783-25	SCREW, BUTTON HEAD, HEX SOCKET	46
4	1006347	GASKET, PLATE	45
1	2004986	PLUG, MACHINE THREAD	44
1	1004260-19	NAME PLATE, TYPE X	43
1	2004113-001	BRACKET, CABLE	42
1	2004115	COVER, POTTED	41
1	1006380	GASKET, RETAINED	40
58	2004707	WASHER, KNURLED	39
3	2003067-031	INTERFACE MODULE A27-29	38
2	2003070-021	INTERFACE MODULE A25-26	37
2	2003953-011	POWER SUPPLY MODULE A30-31	36
1	2003121-231	LOGIC MODULE A24	35
1	2003121-221	LOGIC MODULE A23	34
1	2003121-211	LOGIC MODULE A22	33
1	2003121-191	LOGIC MODULE A21	32
1	2003121-181	LOGIC MODULE A20	31
1	2003121-171	LOGIC MODULE A19	30
1	2003121-161	LOGIC MODULE A18	29
1	2003121-151	LOGIC MODULE A17	28
1	2003121-141	LOGIC MODULE A16	27
1	2003121-131	LOGIC MODULE A15	26
1	2003121-121	LOGIC MODULE A14	25
1	2003121-111	LOGIC MODULE A13	24
1	2003121-091	LOGIC MODULE A12	23
4	2003121-081	LOGIC MODULE A8-11	22
1	2003121-071	LOGIC MODULE A7	21
1	2003121-061	LOGIC MODULE A6	20
1	2003121-051	LOGIC MODULE A5	19
1	2003121-041	LOGIC MODULE A4	18
1	2003121-031	LOGIC MODULE A3	17
1	2003121-021	LOGIC MODULE A2	16
1	2003121-011	LOGIC MODULE A1	15
2	2003140-011	ROPE DRIVER MODULE B16-17	14
1	2003027-021	STRAND SELECT MODULE B15	13
1	2003982-011	SENSE AMPL. MOD. ERASABLE MEMORY B13	12
1	2003111-011	ERASABLE MEMORY MODULE B12	11
1	2003026-021	CURRENT SWITCH MODULE B11	10
2	2003114-011	ERASABLE DRIVER MODULE B9-10	9
1	2003983-011	ALARM MODULE B8	8
1	2003036-021	OSCILLATOR MODULE B7	7
1	2003976	MID SPACER	6
1	2003059-021	INTERCONNECTION HEADER ASSEMBLY	5
1	2003975	TRAY B COVER	4
1	2003977	TRAY A COVER	3
1	2003093-011	TRAY B WIRED ASSEMBLY	2
1	2005092-011	TRAY A WIRED ASSEMBLY	1
QTY REQD	PART OR IDENTIFYING NO.	NOMENCLATURE OR DESCRIPTION	PARA NO.

-011 LIST OF MATERIALS

UNLESS OTHERWISE SPECIFIED DIMENSIONS ARE IN INCHES CAPACITOR VALUES ARE IN µF RESISTOR VALUES ARE IN OHMS TOLERANCES ON FRACTIONS ± DECIMALS ± ANGLES ± DO NOT SCALE THIS DRAWING

MATERIAL —

6003001
2007101
NEXT ASSY USED ON
APPLICATION

MIT INSTRUMENTATION LAB CAMBRIDGE MASS

DRAWN
CHECKED
APPROVED
APPROVED
APPROVED MIT
APPROVED NASA

MANNED SPACECRAFT CENTER HOUSTON, TEXAS

COMPUTER ASSEMBLY

CODE IDENT NO. 80230 | SIZE J | DRAWING NO. 2003200

SCALE 1/1 | SHEET 1 OF 2

2003200 A

2003200 A

E 2 / 2

2003200 A F-1/2 SHEET 2

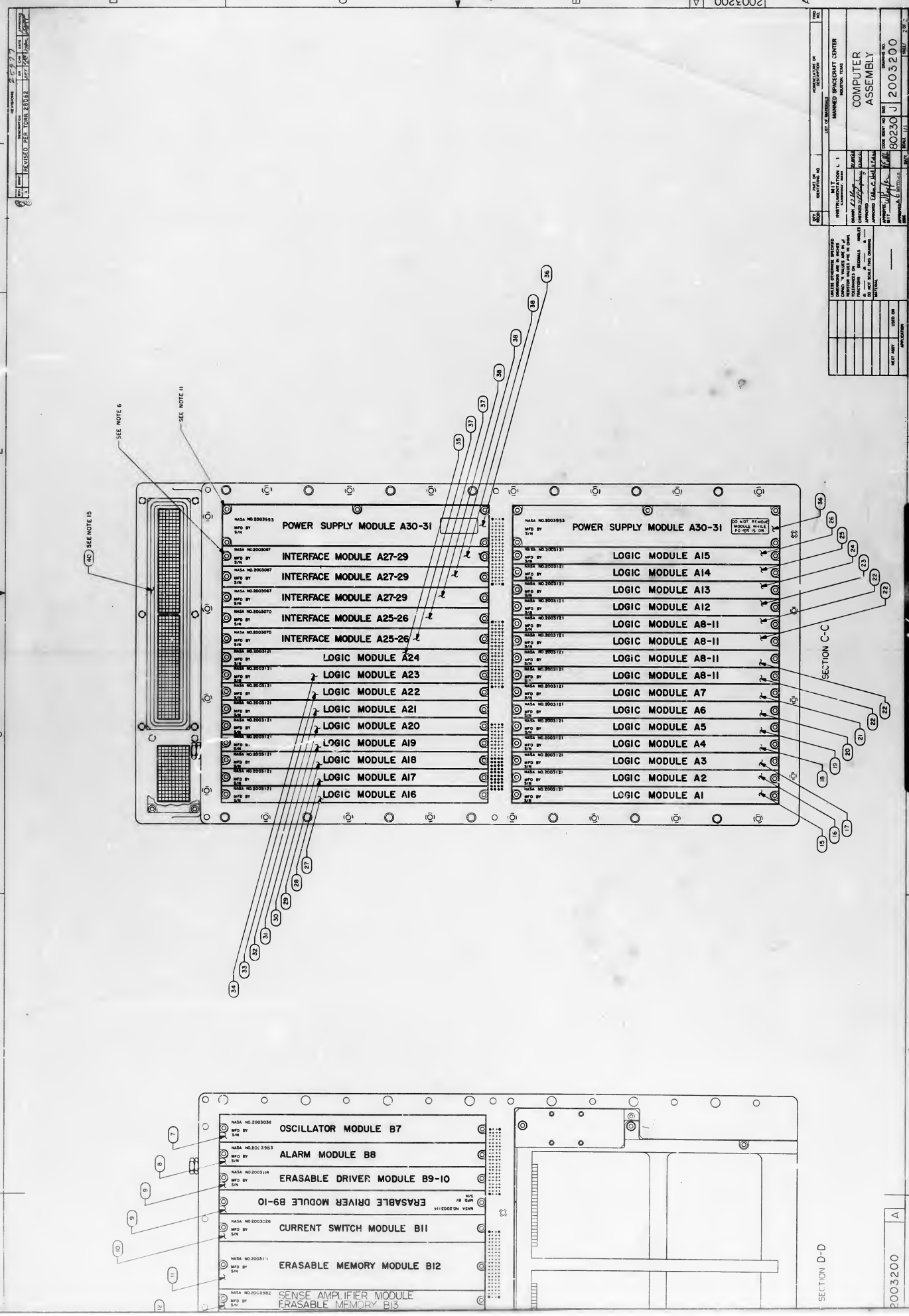
2003200
REVISIONS
REVISED PER TDRR 28062
MANNED SPACECRAFT CENTER
HOUSTON, TEXAS
COMPUTER ASSEMBLY
M.I.T. INSTRUMENTATION LAB
80230
2003200
SEE NOTE 6
SEE NOTE 11
SEE NOTE 15
POWER SUPPLY MODULE A30-31
INTERFACE MODULE A27-29
INTERFACE MODULE A27-29
INTERFACE MODULE A27-29
INTERFACE MODULE A25-26
INTERFACE MODULE A25-26
LOGIC MODULE A24
LOGIC MODULE A23
LOGIC MODULE A22
LOGIC MODULE A21
LOGIC MODULE A20
LOGIC MODULE A19
LOGIC MODULE A18
LOGIC MODULE A17
LOGIC MODULE A16
POWER SUPPLY MODULE A30-31
DO NOT REMOVE MODULE WHILE POWER IS ON
LOGIC MODULE A15
LOGIC MODULE A14
LOGIC MODULE A13
LOGIC MODULE A12
LOGIC MODULE A8-11
LOGIC MODULE A8-11
LOGIC MODULE A8-11
LOGIC MODULE A8-11
LOGIC MODULE A7
LOGIC MODULE A6
LOGIC MODULE A5
LOGIC MODULE A4
LOGIC MODULE A3
LOGIC MODULE A2
LOGIC MODULE A1
SECTION C-C
OSCILLATOR MODULE B7
ALARM MODULE B8
ERASABLE DRIVER MODULE B9-10
ERASABLE DRIVER MODULE B9-10
CURRENT SWITCH MODULE B11
ERASABLE MEMORY MODULE B12
SENSE AMPLIFIER MODULE
ERASABLE MEMORY B13
SECTION D-D

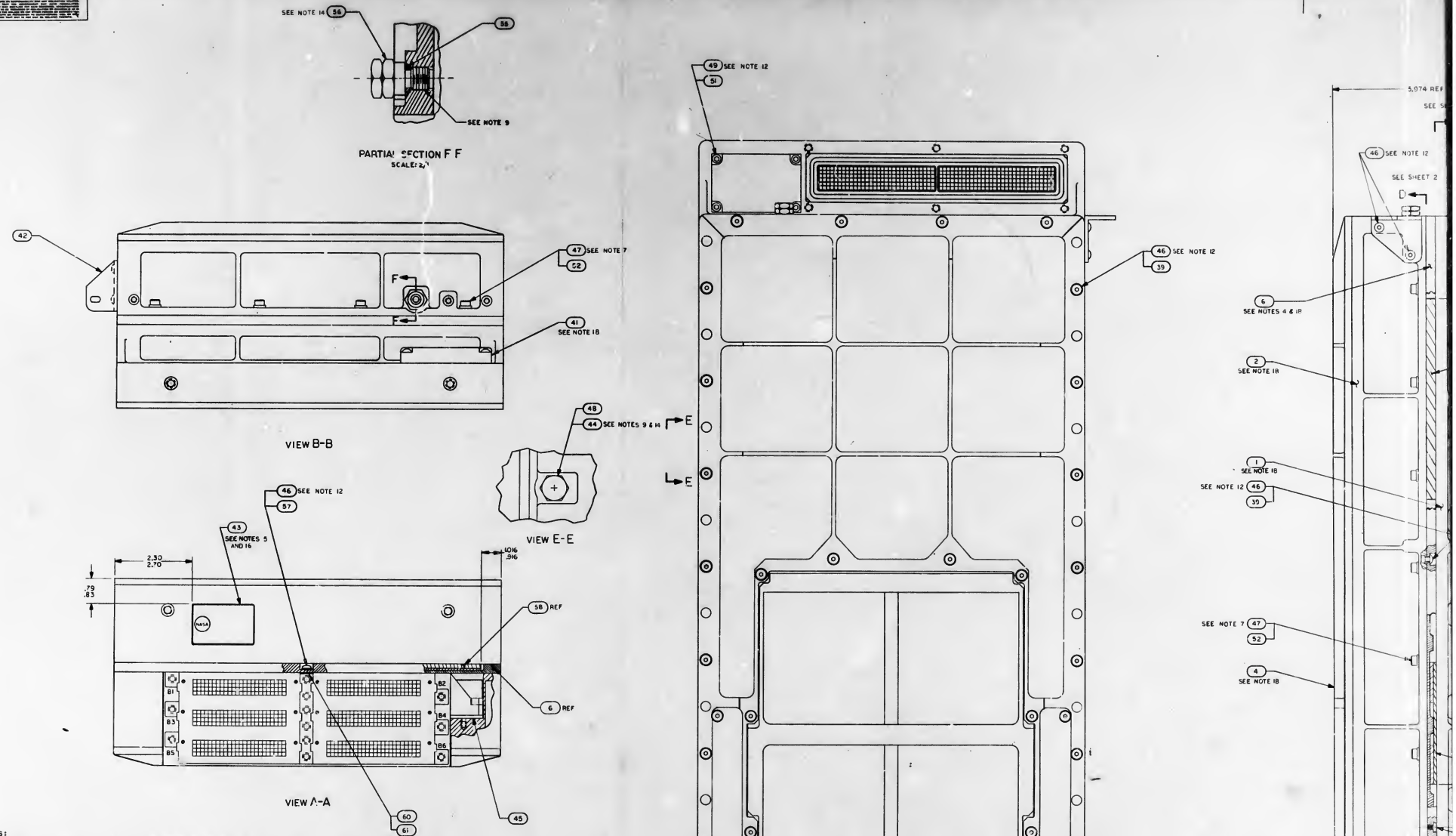

NOTES:

1. INTERPRET DRAWING IN ACCORDANCE WITH STANDARDS PRESCRIBED BY MIL-D-70327
2. PHANTOM LINES DENOTE AGC COLDPLATE AND HANDLING FIXTURE TO BE SUPPLIED BY NORTH AMERICAN AVIATION, INC
3. ADD SILICONE GREASE 1006879 TO MODULE MATING METAL SURFACES AND TRAY MATING SURFACES
4. ASSEMBLE FIND NO.53 AND FIND NO.63 TO FIND NO.6 AND FIND NO.6 TO FIND NO.2 PRIOR TO ASSEMBLY OF FIND NO.2 TO FIND NO.1
5. BOND FIND NO.43 TO FIND NO.1 PER ND1002004 TYPE IV
6. UNLESS OTHERWISE SPECIFIED TORQUE ALL MODULE MOUNTING SCREWS 15/19 INCH POUNDS
7. TORQUE FIND NO.47 TO 28/32 INCH POUNDS
8. FINISH IS REQUIRED TO SATISFY ICD GAEC 510-10001
9. APPLY SEALING COMPOUND MIL-S-22473 GRADE A TO FIND NO.53, FIND NO.56 AND FIND NO.44
10. COMPLETED ASSEMBLY SHALL BE TESTED IN ACCORDANCE WITH AND SHALL MEET ALL THE REQUIREMENTS OF PS2016005
11. TORQUE FOR FIND NO. 36 MOUNTING SCREWS TO BE 4/6 INCH POUNDS
12. TORQUE FOR FIND NO. 46, 49 AND 50 TO BE 18/22 INCH POUNDS
13. TORQUE FOR FIND NO. 53 TO BE 4/6 INCH POUNDS
14. TORQUE FOR FIND NO. 44 AND FIND NO. 56 TO BE 137/157 INCH POUNDS
15. FIND NO. 40 SHALL BE SUPPLIED AS PART OF THIS ASSEMBLY
16. MARK COMPUTER ASSEMBLY AND RELATED PART NO., APPLICABLE DASH NO., SERIAL NO. AND CONTRACT NO. PER 1004260 AND SERIALIZE PER ND1002023
17. FINISH SURFACE [-A-] PER ICD NAA MHO1-01302-116 THIS ASSEMBLY MUST BE CAPABLE OF MEETING ELECTRICAL BONDING REQUIREMENTS OF ICD NAA MHO1-01302-116
18. FIND NO. 1 THRU 6 AND FIND NO. 41 TO BE ELECTRICALLY BONDED, RESISTANCE BETWEEN ANY TWO ITEMS TO BE LESS THAN 10 MILLI OHMS
19. LEAK TEST: PURGE AND FILL WITH 30 ± 1.0 PSIA DRY NITROGEN, STORE AT ROOM AMBIENT FOR 24 ± 5 HOURS. TEST PRESSURE FOR $\Delta P < 0.5$ PSIA. ALL MEASUREMENTS MADE AT STANDARD TEMPERATURE ± 2°C TEST SHALL BE PREFORMED WITH 200/400 INSTALLED. FOLLOWING TEST BLEED TO 17 ± 1.0 PSIA
20. BOND FIND NO. 58 TO FIND NO. 6 IN POSITION SHOWN, USING 1006838
21. REFERENCED MODULES MUST NOT BE REPLACED OR INTERCHANGED WITHOUT REPEATING NOMINAL SELECTION PROCEDURE PER NOTE 10.
22. THE VALVE OF C1 TO BE DETERMINED AT ELECTRICAL TEST AND SELECTED FROM APPROPRIATE CHART.
23. WHEN THE VALUE OF C1 IS "0" NO COMPONENT SHALL BE USED.
24. ENCAPSULATE AREA SHOWN AFTER SELECTION AND INSTALLATION OF C1 USING ND.002009 METHOD C OR D USING PRIMER PER SCD 1012513.
25. WELD PER ND1002005.

2003200 | 3

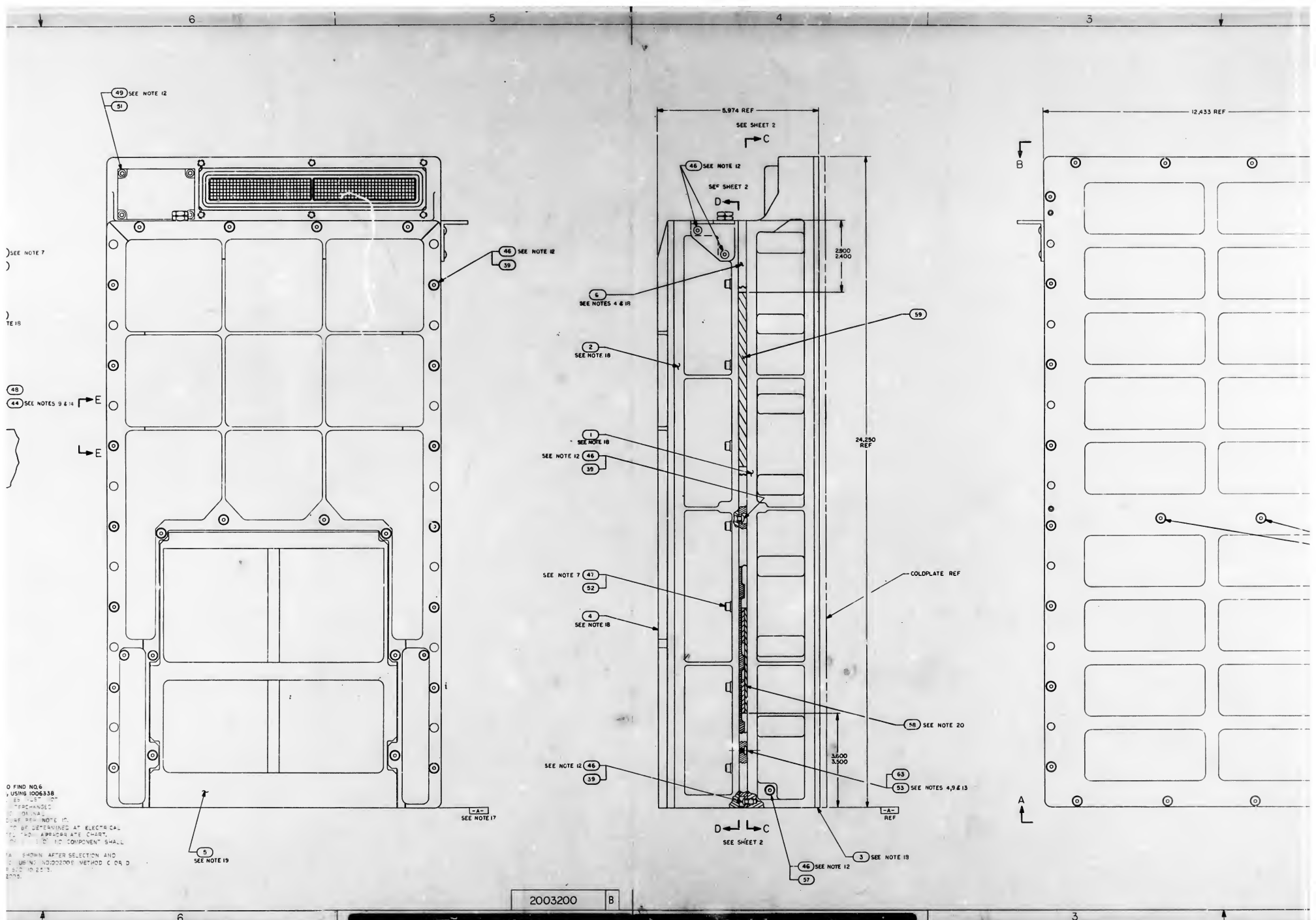
49 SEE NOTE 12
51
46 SEE NOTE 12
39
48
44 SEE NOTES 9 & 14
E
E
-A-
SEE NOTE 17
5
SEE NOTE 19
5.974 REF
SEE SHEET 2
C
46 SEE NOTE 12
SEE SHEET 2
D
2.900
2.400
6
SEE NOTES 4 & 18
59
2
SEE NOTE 18
1
SEE NOTE 18
SEE NOTE 12 46
39
24.250
REF
SEE NOTE 7 47
52
COLDPLATE REF
4
SEE NOTE 18
58 SEE NOTE 20
3.600
3.500
SEE NOTE 12 46
39
63
53 SEE NOTES 4,9 & 13
-A-
REF
D
C
SEE SHEET 2
46 SEE NOTE 12
57
3 SEE NOTE 19
12.433 REF
B
A
2003200
B

REVISIONS 2377					
SYM	ZONE	DESCRIPTION	LTR	LTR	DATE
A		REVISED PER TDRR 28062			
B		REVISED PER TDRR 30887			

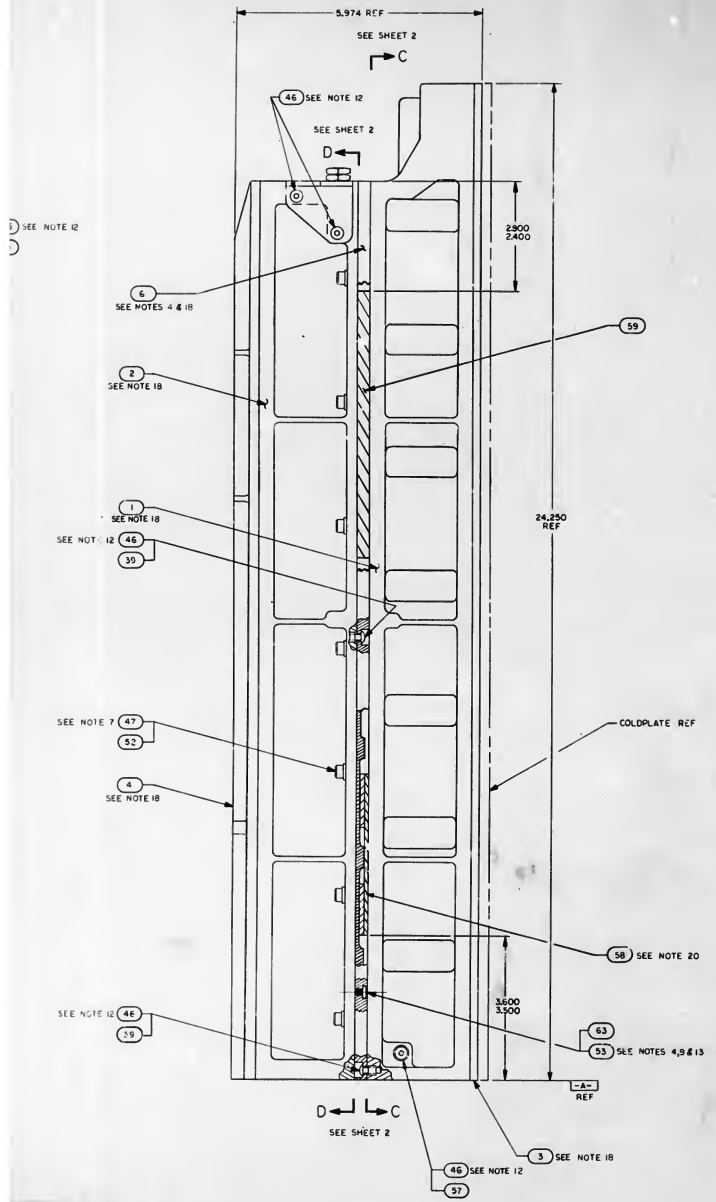

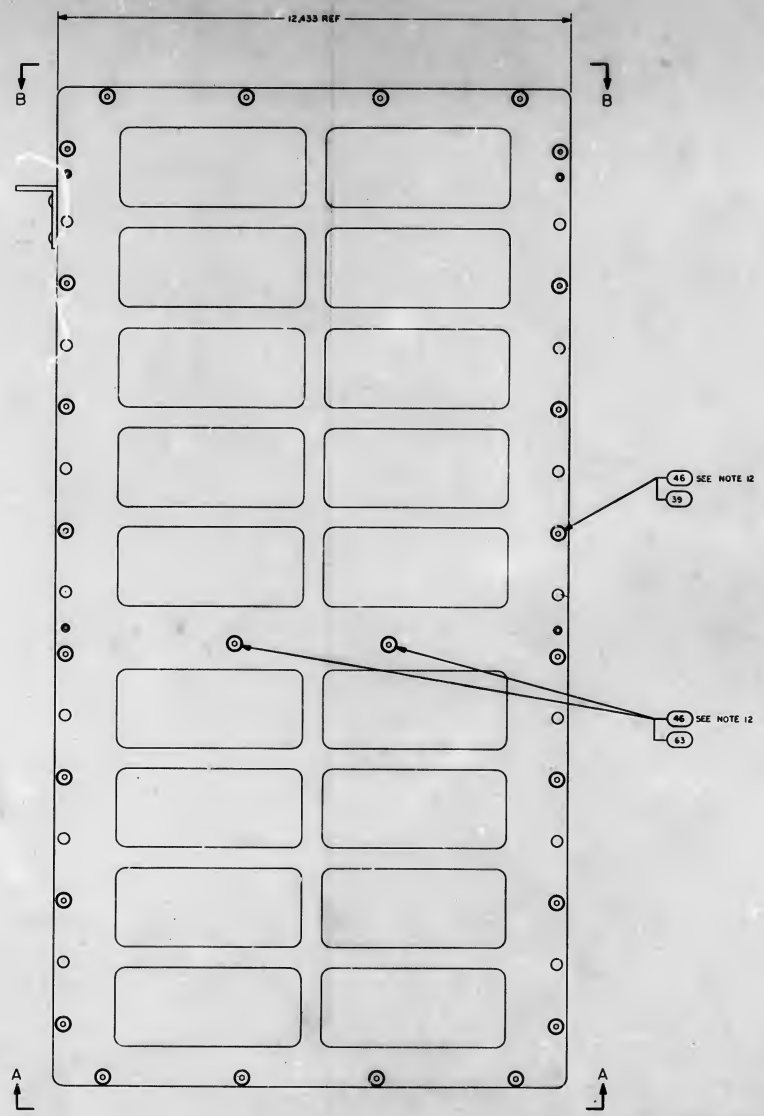

QTY REQD	PART OR IDENTIFYING NO.	NOMENCLATURE OR DESCRIPTION	FIND NO.
AR	1006776-22	INSULATION SLEEVING, ELECTRICAL	65
X	2005036	AGC WIRE LIST	REF
1	SEE NOTE 22	CAPACITOR	64
10	2004148-007	WASHER, FLAT	63
1	2003981-011	SENSE AMPLIFIER MODULE, FIXED MEMORY B14	62
AR	2004895-002	SHIM AGC	61
AR	2004895-001	SHIM AGC	60
1	2004899-001	PAD VIBRATION	59
1	2003970	VIBRATION PAD ASSY	58
4	NAS1598-008N	WASHER, SEALING	57
1	2018773	VALVE PRESSURE ASSEMBLY	56
1	1000159-5	PACKING, PREFORMED "O" RING	55
2	2004984-001	WASHER, FLAT	54
8	2004130	PAD, THREADED	53
18	2004894-014	WASHER, FLAT	52
4	2004894-012	WASHER, FLAT	51
2	1001489-34	SCREW, HEX SOCKET HEAD	50
4	1004722-2	SCREW, CAPTIVE	49
1	1000159-7	PACKING, PREFORMED "O" RING	48
18	MS16996-14	SCREW, SOCKET HEAD, CAP	47
66	1006783-25	SCREW, BUTTON HEAD, HEX SOCKET	46
2	1006347	GASKET, PLATE	45
1	2004986	PLUG, MACHINE THREAD	44
1	1004260-19	NAME PLATE, TYPE X	43
1	2004113-001	BRACKET, CABLE	42
1	2004115	COVER, POTTED	41
1	1006380	GASKET, RETAINED	40
58	2004707	WASHER, KNURLED	39
3	2003067-031	INTERFACE MODULE A27-28	38
2	2003070-021	INTERFACE MODULE A25-26	37
2	2003953-011	POWER SUPPLY MODULE A30-31	36
1	2003121-231	LOGIC MODULE A24	35
1	2003121-221	LOGIC MODULE A23	34
1	2003121-211	LOGIC MODULE A22	33
1	2003121-191	LOGIC MODULE A21	32
1	2003121-181	LOGIC MODULE A20	31
1	2003121-171	LOGIC MODULE A19	30
1	2003121-161	LOGIC MODULE A18	29
1	2003121-151	LOGIC MODULE A17	28
1	2003121-141	LOGIC MODULE A16	27
1	2003121-131	LOGIC MODULE A15	26
1	2003121-121	LOGIC MODULE A14	25
1	2003121-111	LOGIC MODULE A13	24
1	2003121-091	LOGIC MODULE A12	23
4	2003121-081	LOGIC MODULE A8-11	22
1	2003121-071	LOGIC MODULE A7	21
1	2003121-061	LOGIC MODULE A6	20
1	2003121-051	LOGIC MODULE A5	19
1	2003121-041	LOGIC MODULE A4	18
1	2003121-031	LOGIC MODULE A3	17
1	2003121-021	LOGIC MODULE A2	16
1	2003121-011	LOGIC MODULE A1	15
2	2003140-011	ROPE DRIVER MODULE B16-17	14
1	2003027-021	STRAND SELECT MODULE B15	13
1	2003982-011	SENSE AMPL. MOD., ERASABLE MEMORY B13	12
1	2003111-011	ERASABLE MEMORY MODULE B12	11
1	2003026-021	CURRENT SWITCH MODULE B11	10
2	2003114-011	ERASABLE DRIVER MODULE B9-10	9
1	2003983-011	ALARM MODULE B8	8
1	2003036-021	OSCILLATOR MODULE B7	7
1	2003978	MID SPACER	6
1	2003059-021	INTERCONNECTION HEADER ASSEMBLY	5
1	2003976	TRAY A COVER	4
1	2003977	TRAY A COVER	3
1	2003092-011	TRAY B WIRED ASSEMBLY	2
1	2003092-011	TRAY A WIRED ASSEMBLY	1

LIST OF MATERIALS

UNLESS OTHERWISE SPECIFIED DIMENSIONS ARE IN INCHES CAPACITOR VALUES ARE IN μf RESISTOR VALUES ARE IN OHMS TOLERANCES ON FRACTIONS ±1/64 DECIMALS .XXX ±.5 .X ±.1 .XX ±.25 ANGLES ±1° DO NOT SCALE THIS DRAWING

MATERIAL —

2003991
NEXT ASSY | USED ON
APPLICATION

MIT INSTRUMENTATION LAB CAMBRIDGE, MASS

MANNED SPACECRAFT CENTER HOUSTON, TEXAS

DRAWN | CHECKED | APPROVED | APPROVED | APPROVED MIT | APPROVED NASA

COMPUTER ASSEMBLY

CODE IDENT NO. 80230 | SIZE J | DRAWING NO. 2003200

SCALE 1/1 | SHEET 1 OF 2

2003200

C1	
PART NO.	VALUE UUF
1006777-1	10
-15	150
-18	330
-20	470
-22	680
-23	820
SEE NOTE 23	0

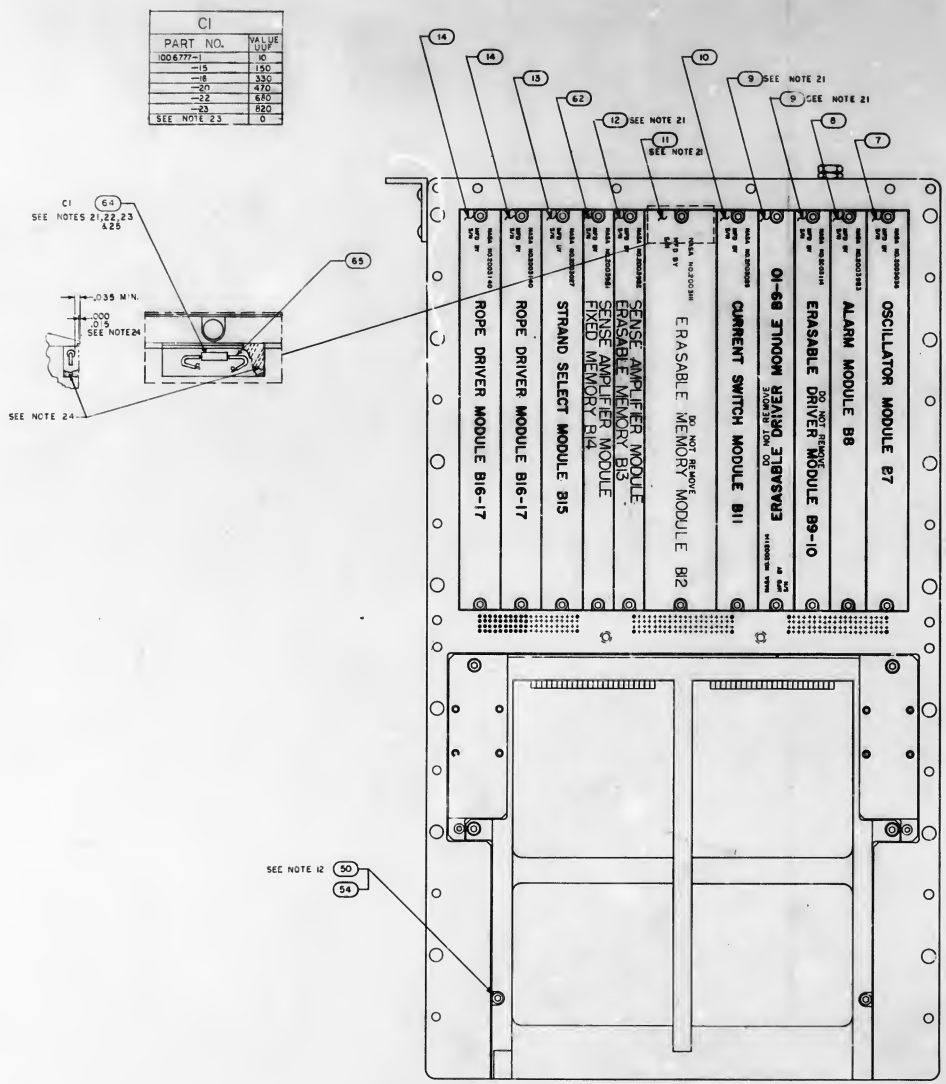

SECTION D-D

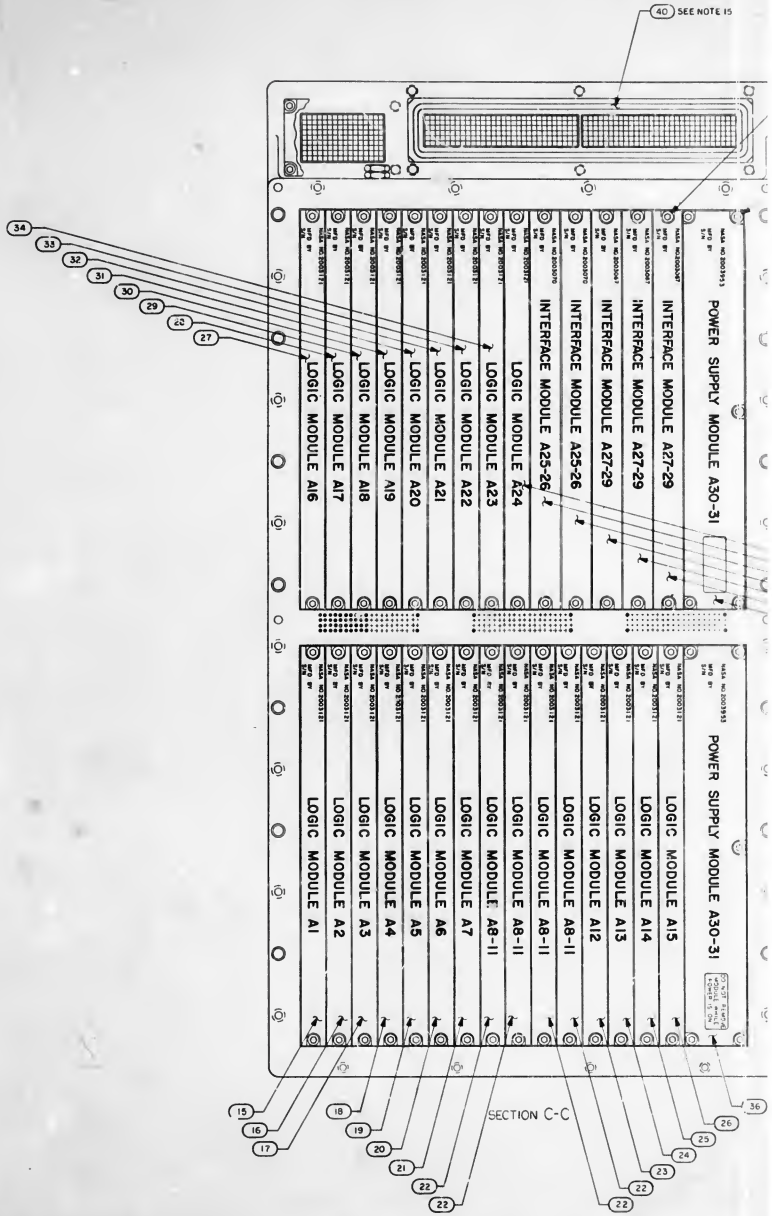

SECTION C-C

2003200 B

REVISIONS 25977					
SYM	ZONE	DESCRIPTION	BY	CHK	DATE / APPROVED
A		REVISED PER TORR 28062			
B		REVISED PER TORR 30887			

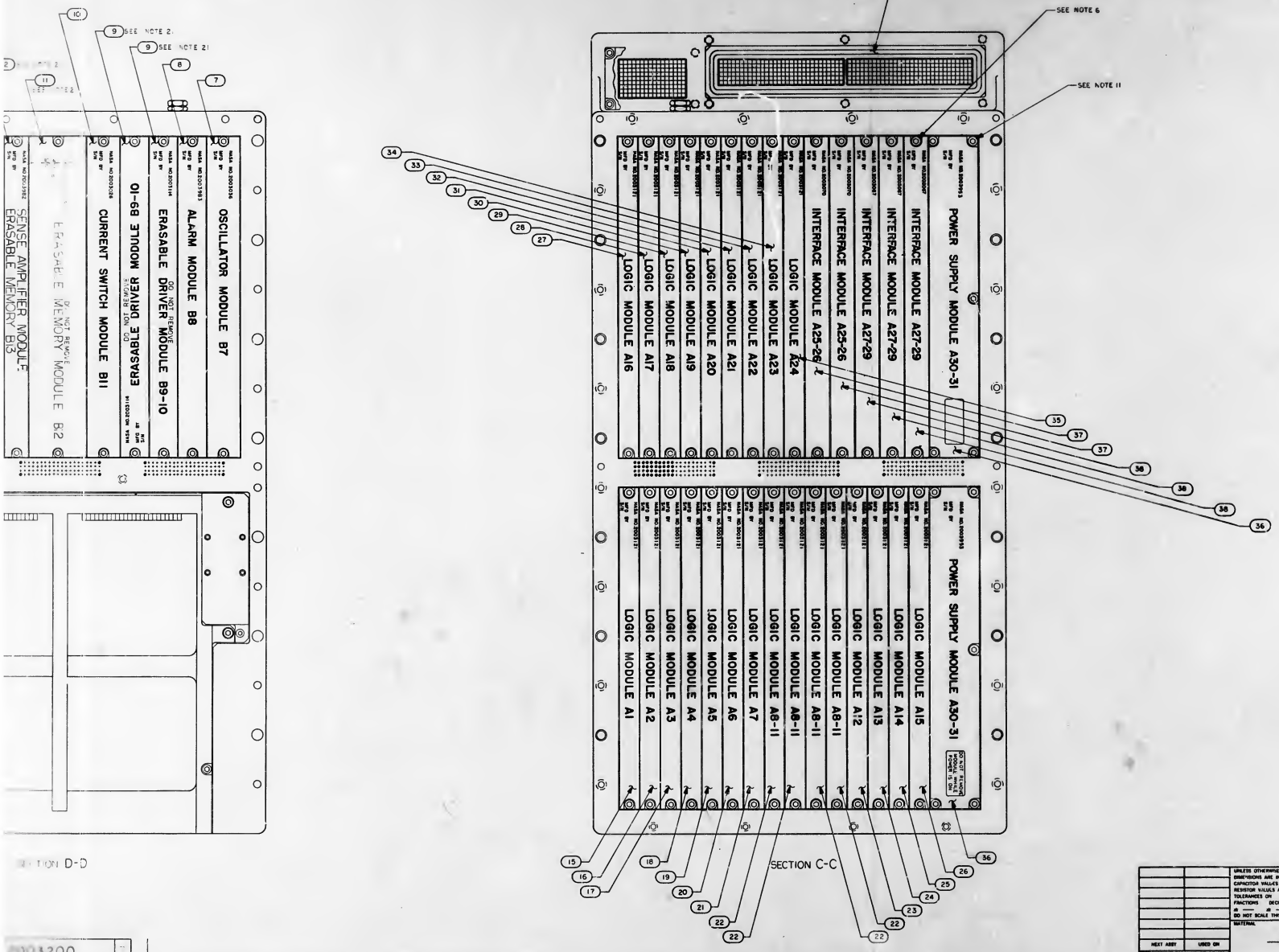

QTY REQD	PART OR IDENTIFYING NO	NOMENCLATURE OR DESCRIPTION	FIND NO
		LIST OF MATERIALS	

MIT INSTRUMENTATION LAB CAMBRIDGE 39, MASS.

MANNED SPACECRAFT CENTER HOUSTON, TEXAS

DRAWN / CHECKED / APPROVED / APPROVED

UNLESS OTHERWISE SPECIFIED DIMENSIONS ARE IN INCHES CAPACITOR VALUES ARE IN μf RESISTOR VALUES ARE IN OHMS TOLERANCES ON FRACTIONS DECIMALS ANGLES ± ± ± DO NOT SCALE THIS DRAWING

MATERIAL

NEXT ASSY | USED ON

APPLICATION

APPROVED MIT / APPROVED MSC

COMPUTER ASSEMBLY

CODE IDENT NO 80230 | SIZE J | DRAWING NO 2003200

SCALE 1/1 | SHEET 2 OF 2

2003200

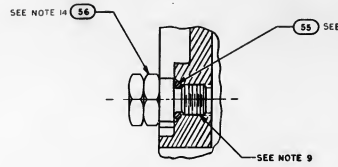

PARTIAL SECTION F F
SCALE: 2/1

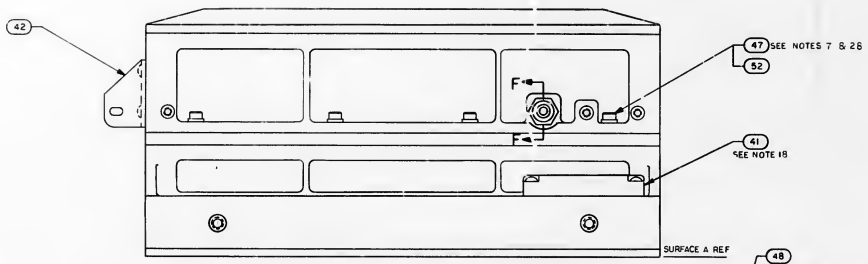

VIEW B-B

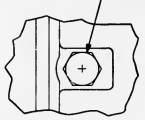

VIEW E-E

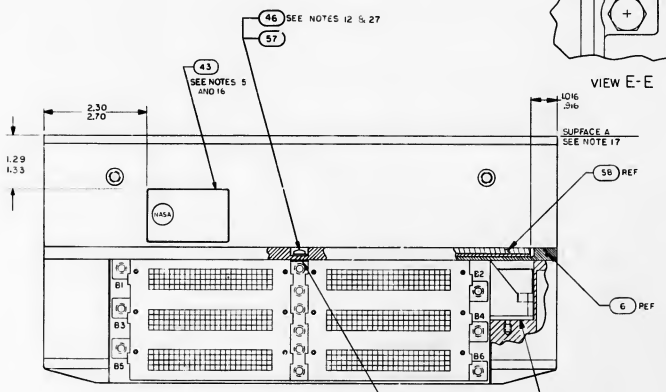

VIEW A-A

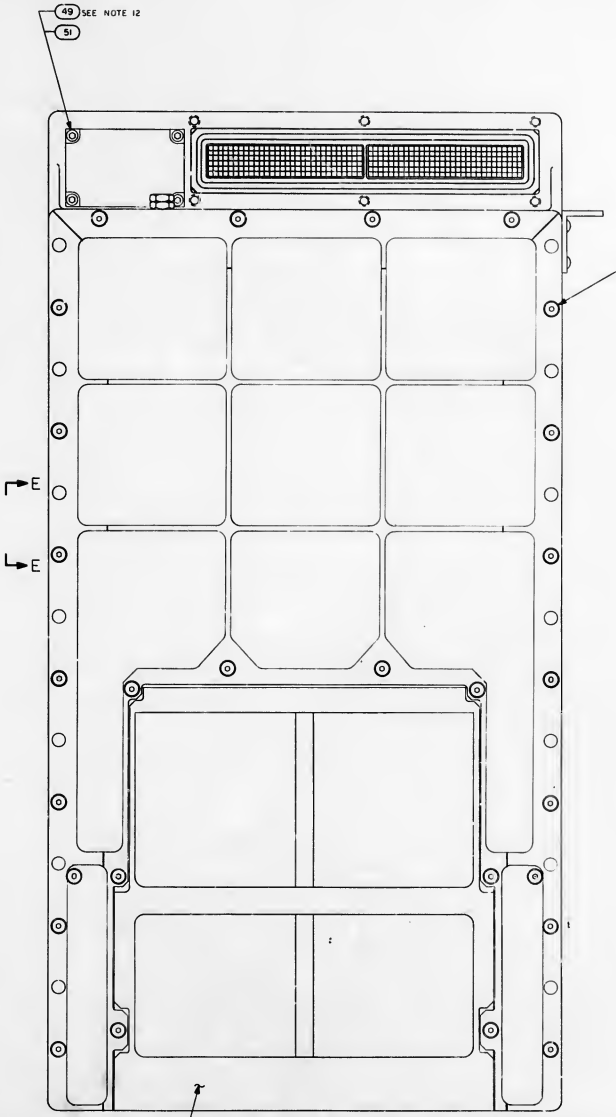

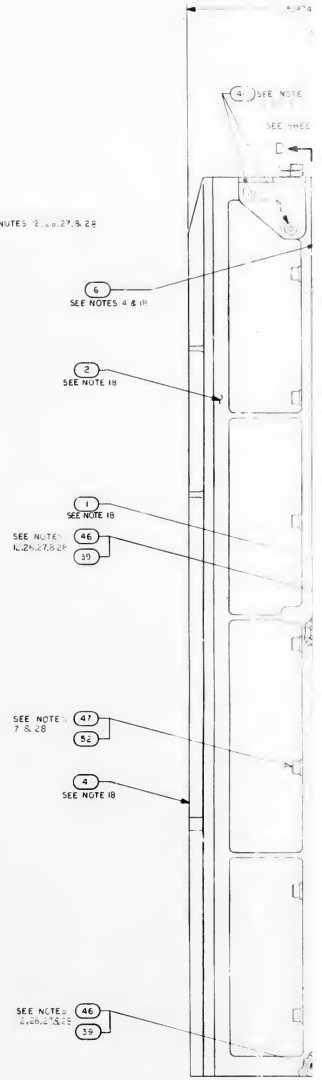

NOTES:

1. INTERPRET DRAWING IN ACCORDANCE WITH STANDARDS PRESCRIBED BY MIL-D-70327
2. PHANTOM LINES DENOTE AGC COLDPLATE AND HANDLING FIXTURE TO BE SUPPLIED BY NORTH AMERICAN AVIATION, INC
3. ADD SILICONE GREASE 1006879 TO MODULE MATING METAL SURFACES AND TRAY MATING SURFACES
4. ASSEMBLE FIND NO 55 AND FIND NO 63 TO FIND NO 6 AND FIND NO 6 TO FIND NO 2 PRIOR TO ASSEMBLY OF FIND NO 2 TO FIND NO 1
5. BOND FIND NO 43 TO FIND NO 1 PER ND1002004 TYPE II
6. UNLESS OTHERWISE SPECIFIED TORQUE ALL MODULE MOUNTING SCREWS 15/19 INCH POUNDS
7. TORQUE FIND NO 47 TO 28/32 INCH POUNDS
8. FINISH IS REQUIRED TO SATISFY ICD GAEC 510-10001
9. APPLY SEALING COMPOUND MIL-S-22473 GRADE A TO FIND NO 53, FIND NO 56 AND FIND NO 44
10. COMPLETED ASSEMBLY SHALL BE TESTED IN ACCORDANCE WITH AND SHALL MEET ALL THE REQUIREMENTS OF PS2016005
11. TORQUE FOR FIND NO 36 MOUNTING SCREWS TO BE 4/6 INCH POUNDS
12. TORQUE FOR FIND NO. 46, 49 AND 50 TO BE 18/22 INCH POUNDS
13. TORQUE FOR FIND NO 53 TO BE 4/6 INCH POUNDS
14. TORQUE FOR FIND NO 44 AND FIND NO 56 TO BE 137/157 INCH POUNDS
15. FIND NO 40 SHALL BE SUPPLIED AS PART OF THIS ASSEMBLY
16. MARK COMPUTER ASSEMBLY AND RELATED PART NO., APPLICABLE DASH NO., SERIAL NO. AND CONTRACT NO. PER 1004260 AND SERIALIZE PER ND1002023
17. FINISH SURFACE [A] PER ICD NAA MH01-01302-116 THIS ASSEMBLY MUST BE CAPABLE OF MEETING ELECTRICAL BONDING REQUIREMENTS OF ICD NAA MH01-01302-116
18. FIND NO. 1 THRU 6 AND FIND NO. 41 TO BE ELECTRICALLY BONDED, RESISTANCE BETWEEN ANY TWO ITEMS TO BE LESS THAN 10 MILLI OHMS
19. LEAK TEST: PURGE AND FILL WITH 30 ± 10 PSIA DRY NITROGEN, STORE AT ROOM AMBIENT FOR 24-25 HOURS. TEST PRESSURE FOR $\Delta P < 0.5$ PSIA. ALL MEASUREMENTS MADE AT STANDARD TEMPERATURE ± 2°C, FOLLOWING TEST BLEED TO 17 ± 10 PSIA
20. BOND FIND NO. 58 TO FIND NO. 6 IN POSITION SHOWN, USING 1006338
21. REFERENCED MODULES MUST NOT BE REPLACED OR INTERCHANGED WITHOUT REPEATING NOMINAL SELECTION PROCEDURE PER NOTE 10.
22. THE VALVE OF C1 TO BE DETERMINED AT ELECTRICAL TEST AND SELECTED FROM APPROPRIATE CHART.
23. WHEN THE VALUE OF C1 IS "0" NO COMPONENT SHALL BE USED.
24. ENCAPSULATE AREA SHOWN AFTER SELECTION AND INSTALLATION OF C1 USING ND1002009 METHOD C OR D USING PRIMER PER SCD 1012513.
25. WELD PER ND1002005.
26. ASSEMBLE HARDWARE WITH SMOOTH FACE OF FIND NO. 39 IN CONTACT WITH SCREW HEAD
27. FIND NO. 39, 48, 55 & 57 TO BE DISCARDED AND REPLACED WITH NEW PARTS EACH TIME THEY ARE DISASSEMBLED
28. SEAL EXPOSED HARDWARE ASSEMBLIES WITH .002 MIN THICK COATING OF FIND NO. 66. OVERAL COMPUTER ASSEMBLY DIMENSIONS SHALL NOT BE EXCEEDED.

2003200 C

REVISIONS					
SYM	ZONE	DESCRIPTION	BY	CHK	DATE
A		REVISED PER TDRR 28062			
B		REVISED PER TDRR 30887			
C		REVISED PER TDRR 30890			

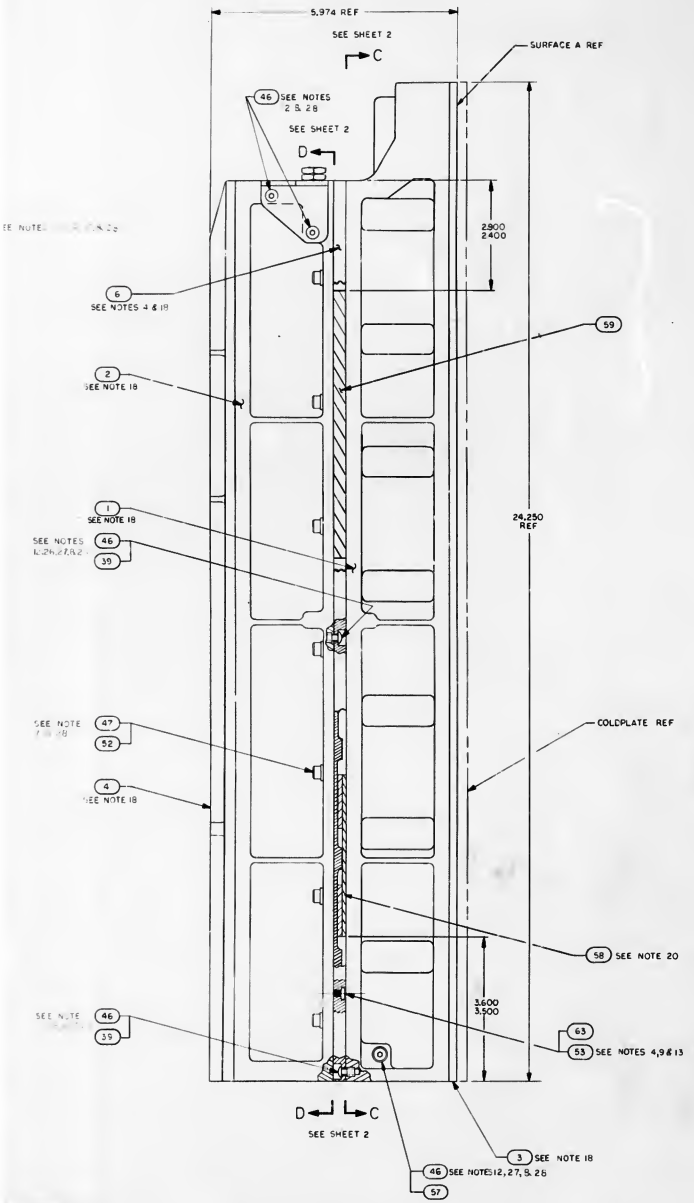

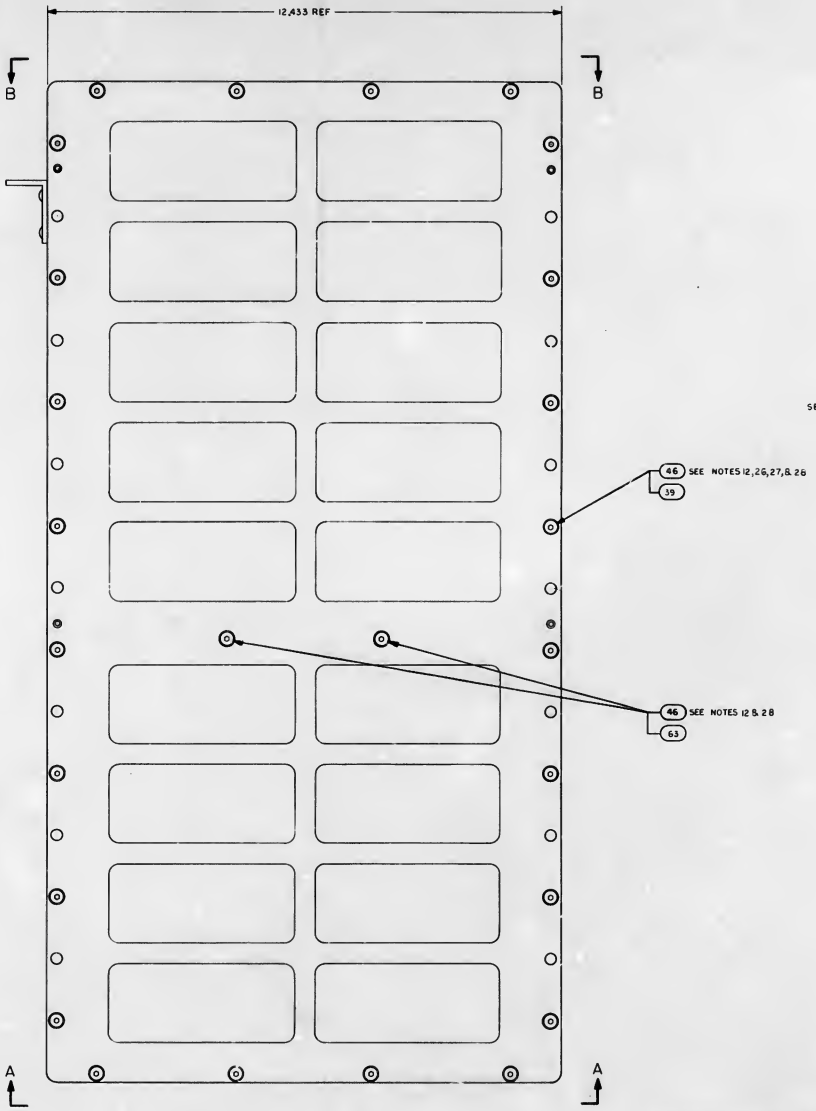

SEE NOTE 28	AR	1006338-000	SEALING COMPOUND, SILICONE RUBBER	66
	AR	1005776-22	INSULATION SLEEVING, ELECTRICAL	65
	X	2005036	AGC WIRE LIST	REF
	1	SEE NOTE 22	CAPACITOR	64
	10	2004149-007	WASHER, FLAT	63
	1	2003981-011	SENSE AMPLIFIER MODULE, FIXED MEMORY B14	62
	AR	2004895-002	SHIM AGC	61
	AR	2004895-001	SHIM AGC	60
	1	2004899-001	PAD VIBRATION	59
	1	2003970	VIBRATION PAD ASSY	58
	4	NAS1598-D08N	WASHER, SEALING	57
	1	2018773	VALVE, PRESSURE ASSEMBLY	56
	1	1006159-5	PACKING, PREFORMED "O" RING	55
	2	2004984-001	WASHER, FLAT	54
	8	2004130	PAD, THREADED	53
	18	2004894-014	WASHER, FLAT	52
	4	2004894-012	WASHER, FLAT	51
	2	1001489-34	SCREW, HEX SOCKET HEAD	50
	4	1004722-2	SCREW, CAPTIVE	49
	1	1000159-7	PACKING, PREFORMED "O" RING	48
	18	MS16996-14	SCREW, SOCKET HEAD, CAP	47
	66	1006783-25	SCREW, BUTTON HEAD, HEX SOCKET	46
	2	1006347	GASKET, PLATE	45
	1	2004986	PLUG, MACHINE THREAD	44
	1	1004260-19	NAME PLATE, TYPE 2	43
	1	2004113-001	BRACKET, CABLE	42
	1	2004115	COVER, POTTED	41
	1	1006380	GASKET, RETAINED	40
	58	2004707	WASHER, KNURLED	39
	3	2003067-031	INTERFACE MODULE A27-29	38
	2	2003070-021	INTERFACE MODULE A25-26	37
	2	2003953-011	POWER SUPPLY MODULE A30-31	36
	1	2003121-231	LOGIC MODULE A24	35
	1	2003121-221	LOGIC MODULE A23	34
	1	2003121-211	LOGIC MODULE A22	33
	1	2003121-191	LOGIC MODULE A21	32
	1	2003121-181	LOGIC MODULE A20	31
	1	2003121-171	LOGIC MODULE A19	30
	1	2003121-161	LOGIC MODULE A18	29
	1	2003121-151	LOGIC MODULE A17	28
	1	2003121-141	LOGIC MODULE A16	27
	1	2003121-131	LOGIC MODULE A15	26
	1	2003121-121	LOGIC MODULE A14	25
	1	2003121-111	LOGIC MODULE A13	24
	1	2003121-091	LOGIC MODULE A12	23
	4	2003121-081	LOGIC MODULE A8-11	22
	1	2003121-071	LOGIC MODULE A7	21
	1	2003121-061	LOGIC MODULE A6	20
	1	2003121-051	LOGIC MODULE A5	19
	1	2003121-041	LOGIC MODULE A4	18
	1	2003121-031	LOGIC MODULE A3	17
	1	2003121-021	LOGIC MODULE A2	16
	1	2003121-011	LOGIC MODULE A1	15
	2	2003140-011	ROWE DRIVER MODULE B16-17	14
	1	2003027-021	STRAND SELECT MODULE B15	13
	1	2003982-011	SENSE AMPL MOD, ERASABLE MEMORY B13	12
	1	2003111-011	ERASABLE MEMORY MODULE B12	11
	1	2003026-021	CURRENT SWITCH MODULE B11	10
	2	2003114-011	ERASABLE DRIVER MODULE B9-10	9
	1	2003983-011	ALARM MODULE B8	8
	1	2003036-021	OSCILLATOR MODULE B7	7
	1	2003978	MID SPACER	6
	1	2003059-021	INTERCONNECTION HEADER ASSEMBLY	5
	1	2003976	TRAY B COVER	4
	1	2003977	TRAY A COVER	3
	1	2003093-011	TRAY B WIRED ASSEMBLY	2
	1	2003092-011	TRAY A WIRED ASSEMBLY	1
QTY REQ'D		PART OR IDENTIFYING NO.	NOMENCLATURE OR DESCRIPTION	FIGURE NO.

-011 LIST OF MATERIALS

2003991	
NEXT ASSY	USED ON
APPLICATION	

UNLESS OTHERWISE SPECIFIED
DIMENSIONS ARE IN INCHES
CAPACITOR VALUES ARE IN μf
RESISTOR VALUES ARE IN OHMS
TOLERANCES ON
FRACTIONS ± DECIMALS ± ANGLES ±
DO NOT SCALE THIS DRAWING
MATERIAL —

MIT INSTRUMENTATION LAB CAMBRIDGE MASS

DRAWN
CHECKED
APPROVED
APPROVED
APPROVED MIT
APPROVED MSC

MANNED SPACECRAFT CENTER HOUSTON, TEXAS

COMPUTER ASSEMBLY

CODE IDENT NO.	SIZE	DRAWING NO.
80230	J	2003200

SCALE 1/1 — SHEET 1 OF 2

2003200 C

C1	
PART NO.	VALUE UUF
1006777-1	0
-15	150
-16	330
-20	470
-22	680
-23	820
SEE NOTE 23	0

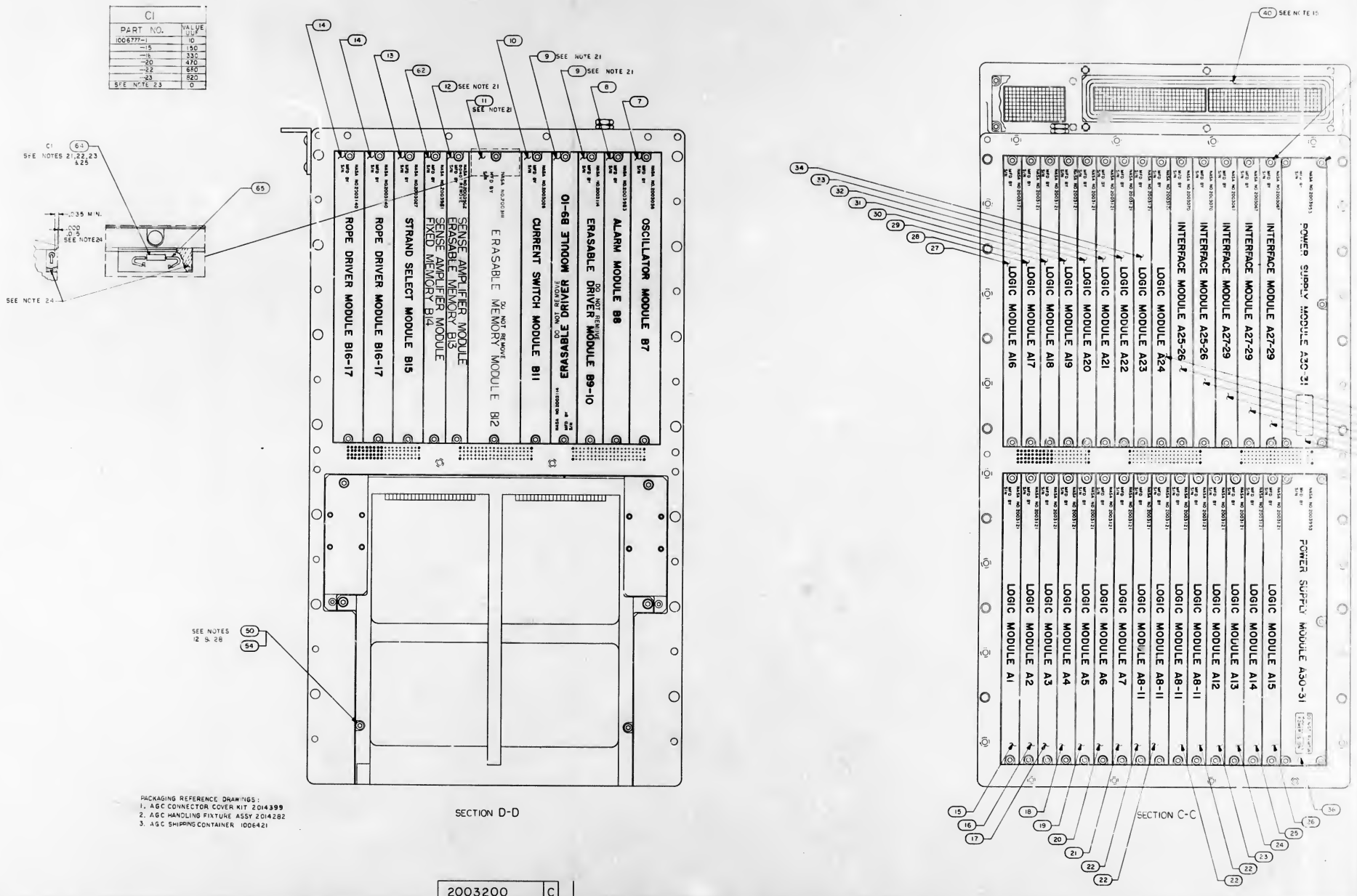

2003200 C

SYM	ZONE	DESCRIPTION	BY	CHK	DATE	APPROVED
A		REVISED PER TDRR 23061				
B		REVISED PER TDRR 30887				
C		REVISED PER TDRR 30890				

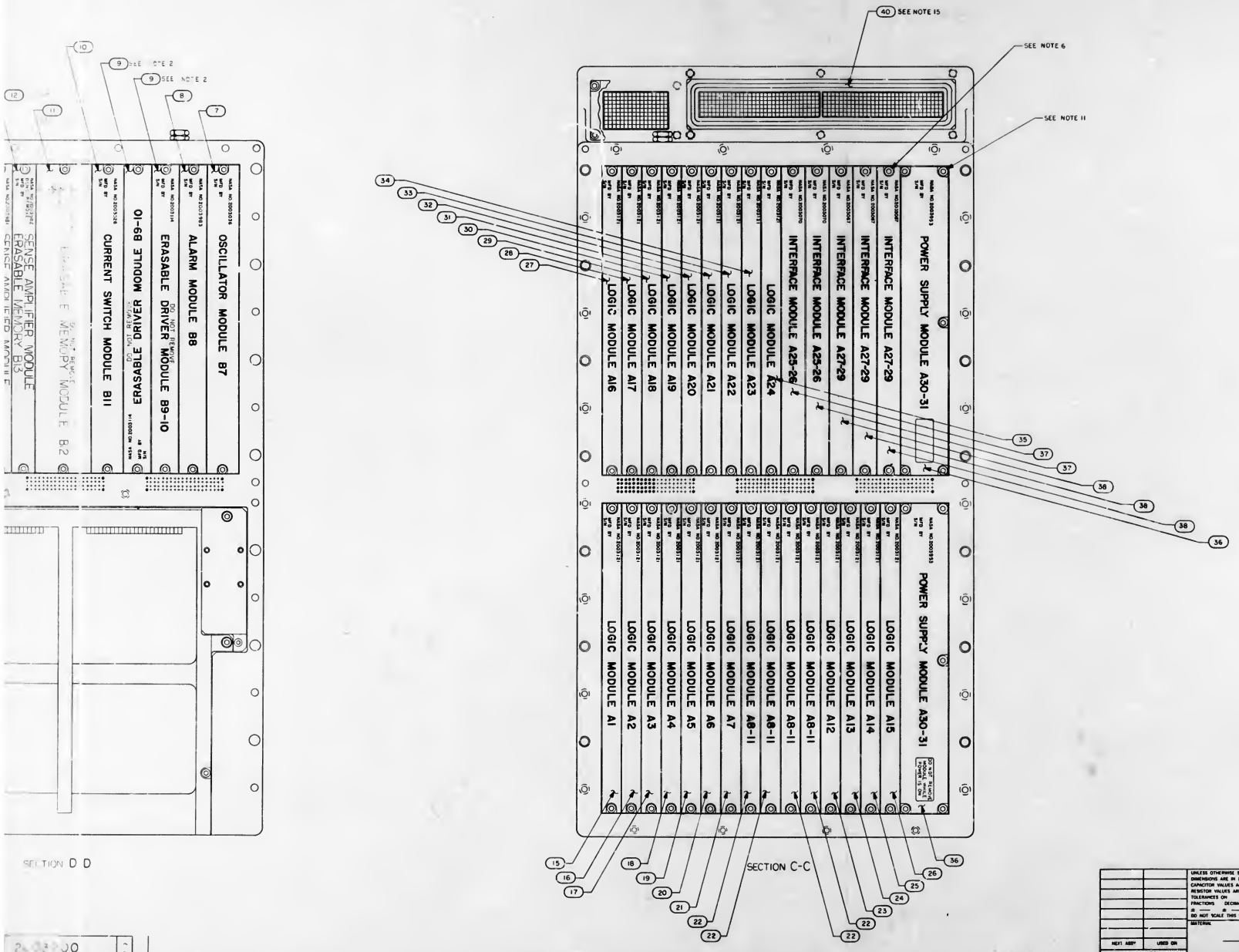

QTY REQD	PART OR IDENTIFYING NO	NOMENCLATURE OR DESCRIPTION	FWD NO
		LIST OF MATERIALS	

UNLESS OTHERWISE SPECIFIED DIMENSIONS ARE IN INCHES. CAPACITOR VALUES ARE IN μf. RESISTOR VALUES ARE IN OHMS. TOLERANCES ON FRACTIONS ± — DECIMALS ± — ANGLES ± —. DO NOT SCALE THIS DRAWING.

MATERIAL —

NEXT ASSY | USED ON

APPLICATION

MIT INSTRUMENTATION LAB CAMBRIDGE MASS

DRAWN R.L. Sharp 11-19-68
CHECKED
APPROVED
APPROVED Calvin A. Hoffstadter
APPROVED MIT
APPROVED NASA
SSC

MANNED SPACECRAFT CENTER HOUSTON, TEXAS

COMPUTER ASSEMBLY

CODE IDENT NO 80230 | SIZE J | DRAWING NO 2003200

DATE | SCALE 1/1 | SHEET 2 OF 2

2003200

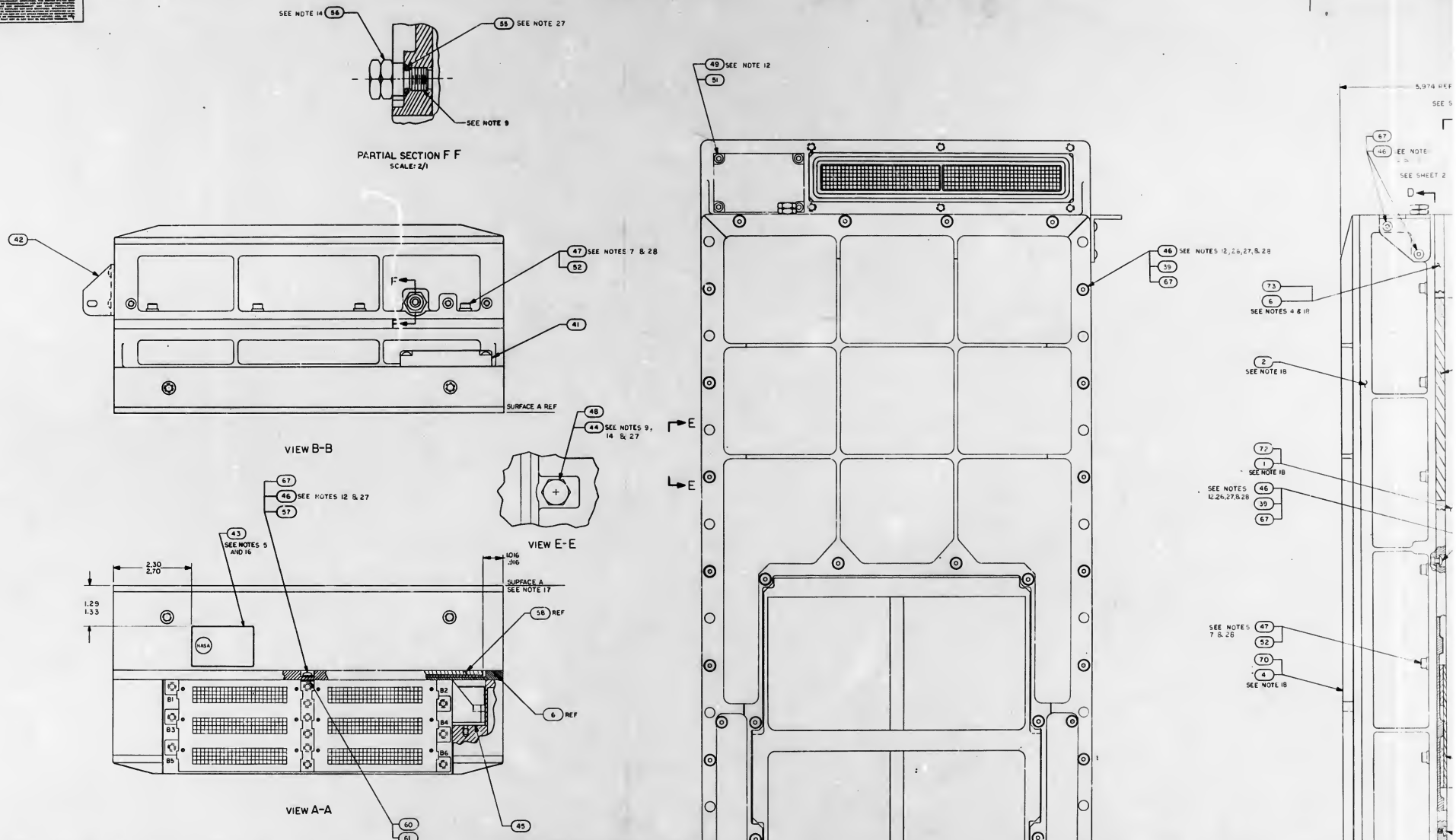

NOTES:

1. INTERPRET DRAWING IN ACCORDANCE WITH STANDARDS PRESCRIBED BY MIL-D-70327
2. PHANTOM LINES DENOTE AGC COLDPLATE AND HANDLING FIXTURE TO BE SUPPLIED BY NORTH AMERICAN AVIATION, INC
3. ADD SILICONE GREASE 1006879 TO MODULE MATING METAL SURFACES AND TRAY MATING SURFACES
4. ASSEMBLE FIND NO.53 AND FIND NO.63 TO FIND NO.6 AND FIND NO.6 TO FIND NO.2 PRIOR TO ASSEMBLY OF FIND NO.2 TO FIND NO.1 OR FIND NO.72
5. BOND FIND NO.43 TO FIND NO.1 OR FIND NO. 72 PER ND1002004 TYPE IV
6. UNLESS OTHERWISE SPECIFIED TORQUE ALL MODULE MOUNTING SCREWS 15/19 INCH POUNDS
7. TORQUE FIND NO.47 TO 28/32 INCH POUNDS
8. FINISH IS REQUIRED TO SATISFY ICD GAEC 51D-10001
9. APPLY SEALING COMPOUND MIL-S-22473 GRADE H TO FIND NO.53, FIND NO.56 AND FIND NO. 44
10. COMPLETED ASSEMBLY SHALL BE TESTED IN ACCORDANCE WITH AND SHALL MEET ALL THE REQUIREMENTS OF PS2016005
11. TORQUE FOR FIND NO. 36 MOUNTING SCREWS TO BE 4/6 INCH POUNDS
12. TORQUE FOR FIND NO. 46, 49, 50, 67 AND 68 TO BE 18/22 INCH POUNDS
13. TORQUE FOR FIND NO. 53 TO BE 4/6 INCH POUNDS
14. TORQUE FOR FIND NO. 44 AND FIND NO. 56 TO BE 137/157 INCH POUNDS
15. FIND NO.40 SHALL BE SUPPLIED AS PART OF THIS ASSEMBLY
16. MARK COMPUTER ASSEMBLY AND RELATED PART NO., APPLICABLE DASH NO., SERIAL NO. AND CONTRACT NO. PER 1004260 AND SERIALIZE PER ND1002023
17. FINISH SURFACE [illegible] PER ICD NAA MHOI-01302-116 THIS ASSEMBLY MUST BE CAPABLE OF MEETING ELECTRICAL BONDING REQUIREMENTS OF ICD NAA MHOI-01302-116
18. THE FOLLOWING RESISTANCES TO BE NOT MORE THAN 20 MILLIOHMS:
    a. RESISTANCE BETWEEN FIND NO.1 AND FIND NO.6
    b. RESISTANCE BETWEEN FIND NO.2 AND FIND NO.5
    c. RESISTANCE BETWEEN FIND NO. 3 AND FIND NO.4 OR BETWEEN FIND NO.69 AND FIND NO.70
19. LEAK TEST: PURGE AND FILL WITH 30±10 PSIA DRY NITROGEN. STORE AT ROOM AMBIENT FOR 24 ±5 HOURS. TEST PRESSURE FOR ΔP< 0.5 PSIA. ALL MEASUREMENTS MADE AT STANDARD TEMPERATURE ±2°C. FOLLOWING TEST BLEED TO 17±1.0 PSIA
20. BOND FIND NO.58 TO FIND NO.6 IN POSITION SHOWN, USING 1006336
21. REFERENCED MODULES MUST NOT BE REPLACED OR INTERCHANGED WITHOUT REPEATING NOMINAL SELECTION PROCEDURE PER NOTE 10
22. THE VALUE OF C1 TO BE DETERMINED AT ELECTRICAL TEST AND SELECTED FROM APPROPRIATE CHART
23. WHEN THE VALUE OF C1 IS "0" NO COMPONENT SHALL BE USED
24. ENCAPSULATE AREA SHOWN AFTER SELECTION AND INSTALLATION OF C1 USING ND1002009 METHOD C OR D USING PRIMER PER SCD 1012513
25. WELD PER ND1002009
26. ASSEMBLE HARDWARE WITH SMOOTH FACE OF FIND NO.39 IN CONTACT WITH SCREW HEAD
27. FIND NO.39, 48, 55 & 57 TO BE DISCARDED AND REPLACED WITH NEW PARTS EACH TIME THEY ARE DISASSEMBLED
28. SEAL EXPOSED HARDWARE ASSEMBLIES WITH .002 MIN THICK COATING OF FIND NO.66, OVERALL COMPUTER ASSEMBLY DIMENSIONS SHALL NOT BE EXCEEDED

2003200 D

REVISIONS						
SYM	ZONE	DESCRIPTION	DR	CHK	DATE	APPROVED
A		REVISED PER TDRR 28062				
B		REVISED PER TDRR 30887				
C		REVISED PER TDRR 30890				
D		REVISED PER TDRR 32353				

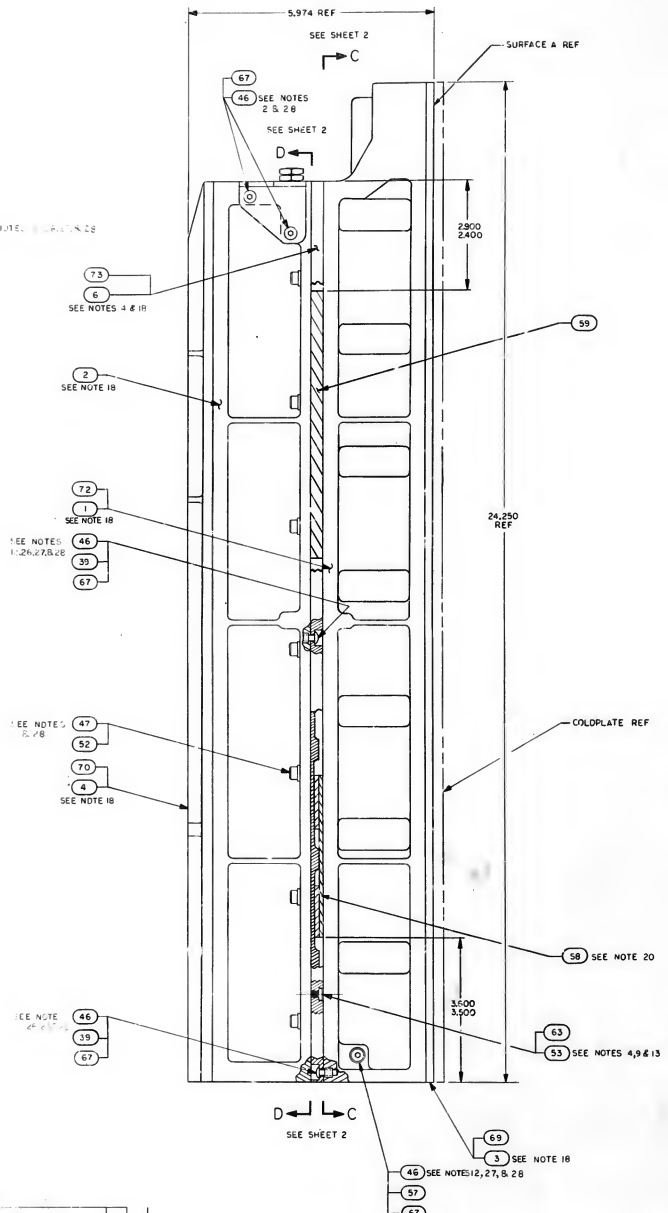

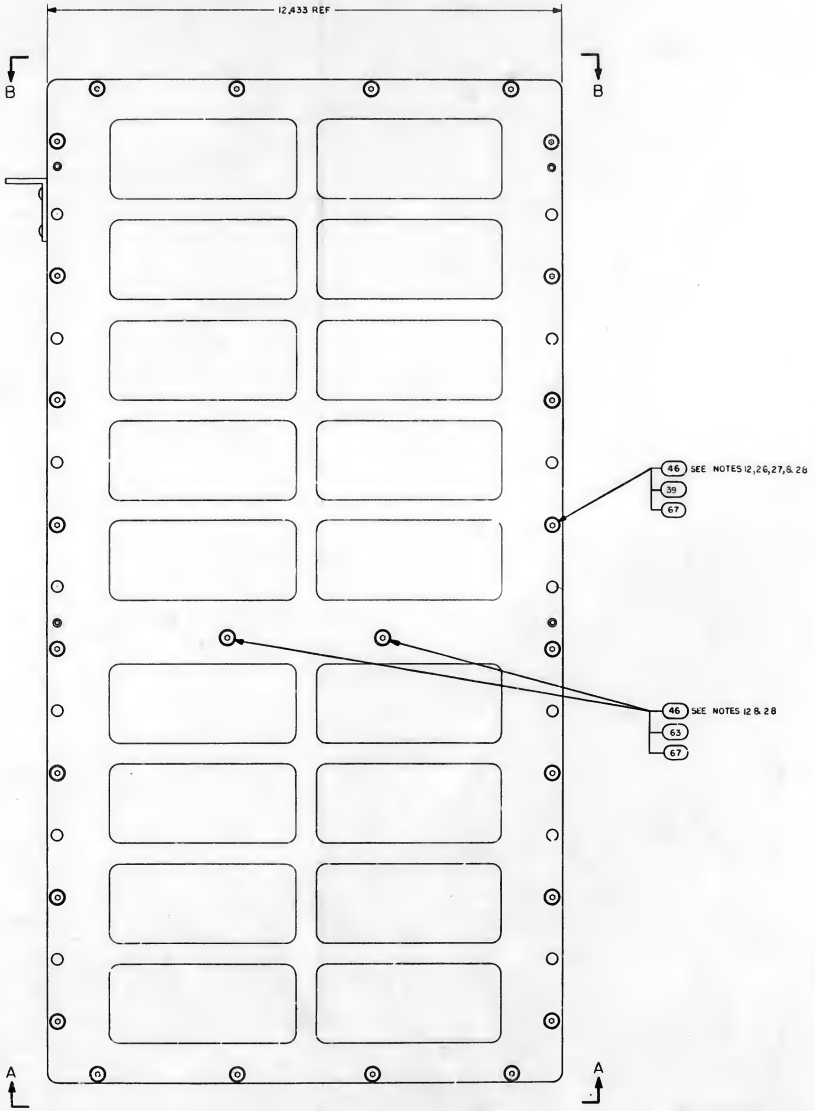

QTY REQD	QTY REQD	PART OR IDENTIFYING NO.	NOMENCLATURE OR DESCRIPTION	FIND NO.
><	—	2005943	AGC WIRE LIST	REF
1	—	2003978-001	MID-SPACER	73
1	—	2003092-021	TRAY A WIRE ASSY	72
2	—	2003140-021	ROPE DRIVER MODULE B13-17	71
1	—	2003976-011	TRAY B COVER	70
1	—	2003977-011	TRAY A COVER	69
2	—	1001489-36	SCREW, HEX SOCKET HEAD	68
66	—	1006783-26	SCREW, BUTTON HEAD HEX SOCKET	67
AR	AR	1006338-000	SEALING COMPOUND, SILICONE RUBBER	66
AR	AR	1006776-22	INSULATION, SLEEVING, ELECTRICAL	65
—	><	2005036	AGC WIRE LIST	REF
1	1	SEE NOTE 22	CAPACITOR	64
10	10	2004148-007	WASHER, FLAT	63
1	1	2003981-011	SENSE AMPLIFIER MODULE, FIXED MEMORY B14	62
AR	AR	2004895-002	SHIM AGC	61
AR	AR	2004895-001	SHIM AGC	60
1	1	2004899-001	PAD VIBRATION	59
1	1	2003970	VIBRATION PAD ASSY	58
4	4	NAS1598-008N	WASHER, SEALING	57
1	1	2018773	VALVE PRESSURE ASSEMBLY	56
1	1	1000159-5	PACKING, PREFORMED "O" RING	55
2	2	2004984-001	WASHER, FLAT	54
8	8	2004130	PAD, THREADED	53
18	18	2004894-014	WASHER, FLAT	52
4	4	2004894-012	WASHER, FLAT	51
—	2	1001489-34	SCREW, HEX SOCKET HEAD	50
4	4	1004722-2	SCREW, CAPTIVE	49
1	1	1000159-7	PACKING, PREFORMED "O" RING	48
18	18	M516996-14	SCREW, SOCKET HEAD, CAP	47
—	66	1006783-25	SCREW, BUTTON HEAD, HEX SOCKET	46
2	2	1006347	GASKET, PLATE	45
1	1	2004986	PLUG, MACHINE THREAD	44
1	1	1004260-19	NAME PLATE, TYPE I	43
1	1	2004113-001	BRACKET, CABLE	42
1	1	2004115	COVER, PITTED	41
1	1	1006380	GASKET, RETAINED	40
58	58	2004707	WASHER, KNURLED	39
3	3	2003067-031	INTERFACE MODULE A27-29	38
2	2	2003070-021	INTERFACE MODULE A25-26	37
2	2	2003953-011	POWER SUPPLY MODULE A30-31	36
1	1	2003121-231	LOGIC MODULE A24	35
1	1	2003121-221	LOGIC MODULE A23	34
1	1	2003121-211	LOGIC MODULE A22	33
1	1	2003121-191	LOGIC MODULE A21	32
1	1	2003121-181	LOGIC MODULE A20	31
1	1	2003121-171	LOGIC MODULE A19	30
1	1	2003121-161	LOGIC MODULE A18	29
1	1	2003121-151	LOGIC MODULE A17	28
1	1	2003121-141	LOGIC MODULE A16	27
1	1	2003121-131	LOGIC MODULE A15	26
1	1	2003121-121	LOGIC MODULE A14	25
1	1	2003121-111	LOGIC MODULE A13	24
1	1	2003121-091	LOGIC MODULE A12	23
4	4	2003121-081	LOGIC MODULE A8-11	22
1	1	2003121-071	LOGIC MODULE A7	21
1	1	2003121-061	LOGIC MODULE A6	20
1	1	2003121-051	LOGIC MODULE A5	19
1	1	2003121-041	LOGIC MODULE A4	18
1	1	2003121-031	LOGIC MODULE A3	17
1	1	2003121-021	LOGIC MODULE A2	16
1	1	2003121-011	LOGIC MODULE A1	15
—	2	2003140-011	ROPE DRIVER MODULE B16-17	14
1	1	2003027-021	STRAND SELECT MODULE B15	13
1	1	2003982-011	SENSE AMPL. MOD. ERASABLE MEMORY B13	12
1	1	2003111-011	ERASABLE MEMORY MODULE B12	11
1	1	2003026-021	CURRENT SWITCH MODULE B11	10
2	2	2003114-011	ERASABLE DRIVER MODULE B9-10	9
1	1	2003883-011	ALARM MODULE B8	8
1	1	2003036-021	OSCILLATOR MODULE B7	7
—	1	2003978-000	MID SPACER	6
1	1	2003059-021	INTERCONNECTION HEADER ASSEMBLY	5
—	1	2003976-000	TRAY B COVER	4
—	1	2003977-000	TRAY A COVER	3
1	1	2003093-011	TRAY B WIRED ASSEMBLY	2
—	1	2003092-011	TRAY A WIRED ASSEMBLY	1

-021-011 LIST OF MATERIALS

UNLESS OTHERWISE SPECIFIED DIMENSIONS ARE IN INCHES CAPACITOR VALUES ARE IN μf RESISTOR VALUES ARE IN OHMS TOLERANCES ON FRACTIONS ± — DECIMALS ± — ANGLES ± —
DO NOT SCALE THIS DRAWING
MATERIAL —

2003991
NEXT ASSY | USED ON
APPLICATION

MIT INSTRUMENTATION LAB CAMBRIDGE, MASS.
DRAWN
CHECKED
APVD.
APPROVED
APPROVED MIT
APPROVED NASC

MANNED SPACECRAFT CENTER HOUSTON, TEXAS

COMPUTER ASSEMBLY

CODE IDENT NO. 80230 | SIZE J | DRAWING NO. 2003200
SCALE NONE | SHEET — OF 2

2003200 D

CI	
PART NO.	VALUE UUF
1006777-1	10
-15	150
-18	330
-20	470
-22	680
-23	820
SEE NOTE 23	0

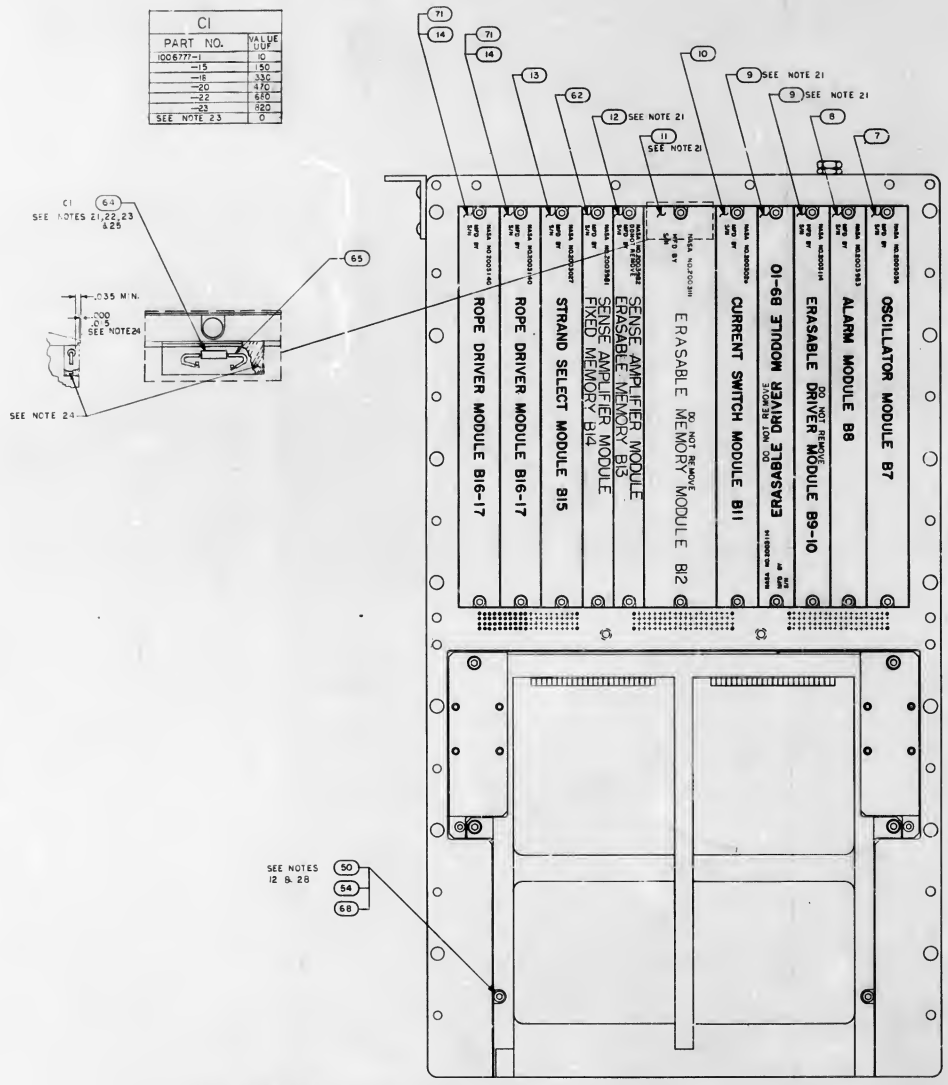

SECTION D-D

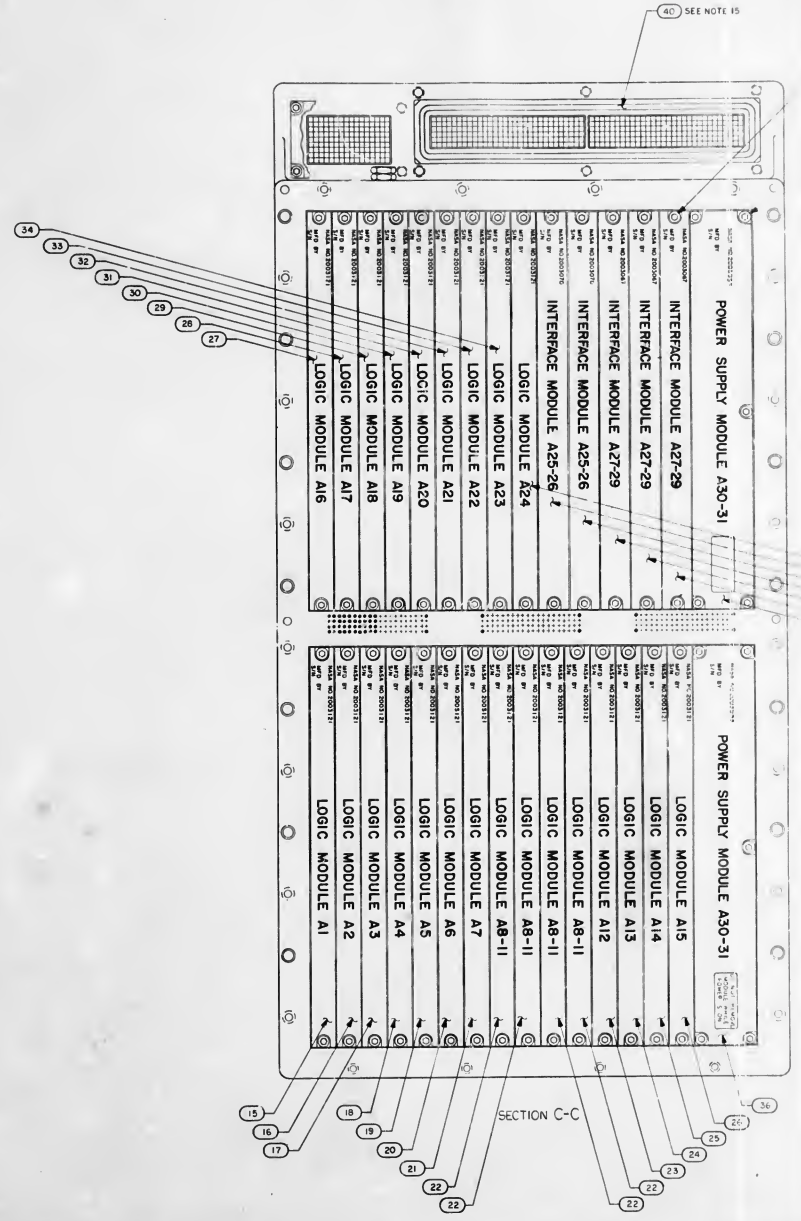

SECTION C-C

PACKAGING REFERENCE DRAWINGS:
1. AGC CONNECTOR COVER KIT 2014399
2. AGC HANDLING FIXTURE ASSY 2014282
3. AGC SHIPPING CONTAINER 1006421

2003200 D

REVISIONS						
SYM	ZONE	DESCRIPTION	DR	CHK	DATE	APPROVED
A		REVISED PER TDRR 28062				
B		REVISED PER TDRR 30887				
C		REVISED PER TDRR 30890				
D		REVISED PER TDRR 32353				

QTY REQD	PART OR IDENTIFYING NO	NOMENCLATURE OR DESCRIPTION	FIND NO
		LIST OF MATERIALS	

UNLESS OTHERWISE SPECIFIED DIMENSIONS ARE IN INCHES CAPACITOR VALUES ARE IN μf RESISTOR VALUES ARE IN OHMS TOLERANCES ON FRACTIONS ± DECIMALS ± ANGLES ± DO NOT SCALE THIS DRAWING

MATERIAL

NEXT ASSY | USED ON

APPLICATION

MIT INSTRUMENTATION LAB CAMBRIDGE, MASS

MANNED SPACECRAFT CENTER HOUSTON, TEXAS

COMPUTER ASSEMBLY

DRAWN | CHECKED | APPROVED | APPROVED MIT | APPROVED NASA | APPROVED MSC

CODE IDENT NO 80230 | SIZE J | DRAWING NO 2003200

DATE | SCALE 1/1 | SHEET 2 OF 2

2003200

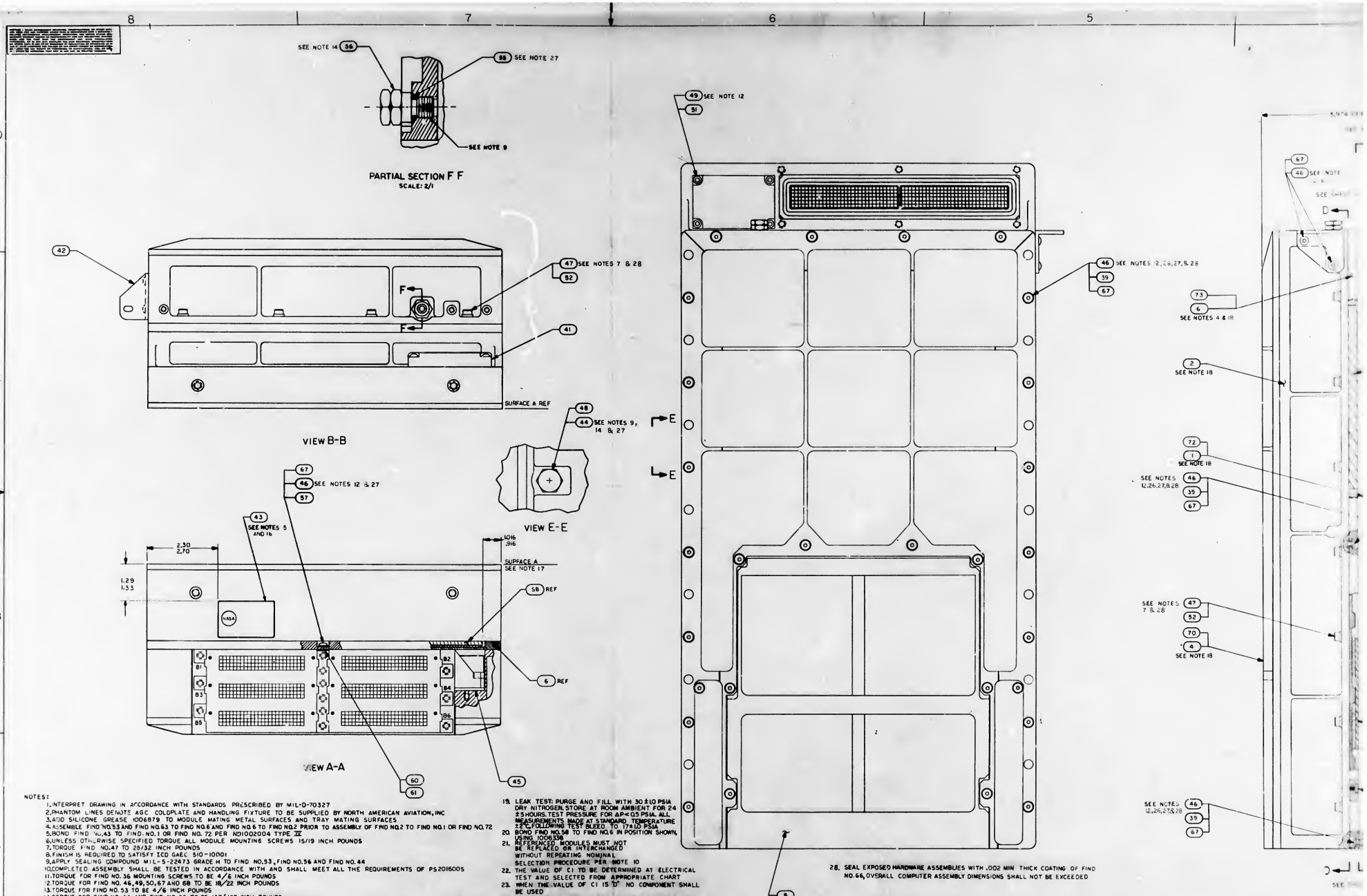

NOTES:

1. INTERPRET DRAWING IN ACCORDANCE WITH STANDARDS PRESCRIBED BY MIL-D-70327
2. PHANTOM LINES DENOTE AGC COLDPLATE AND HANDLING FIXTURE TO BE SUPPLIED BY NORTH AMERICAN AVIATION, INC
3. ADD SILICONE GREASE 1006879 TO MODULE MATING METAL SURFACES AND TRAY MATING SURFACES
4. ASSEMBLE FIND NO.53 AND FIND NO.63 TO FIND NO.6 AND FIND NO.6 TO FIND NO.2 PRIOR TO ASSEMBLY OF FIND NO.2 TO FIND NO.1 OR FIND NO.72
5. BOND FIND NO.43 TO FIND NO.1 OR FIND NO. 72 PER ND1002004 TYPE IV
6. UNLESS OTHERWISE SPECIFIED TORQUE ALL MODULE MOUNTING SCREWS 15/19 INCH POUNDS
7. TORQUE FIND NO.47 TO 28/32 INCH POUNDS
8. FINISH IS REQUIRED TO SATISFY ICD GAEC 510-10001
9. APPLY SEALING COMPOUND MIL-S-22473 GRADE H TO FIND NO.53, FIND NO.56 AND FIND NO. 44
10. COMPLETED ASSEMBLY SHALL BE TESTED IN ACCORDANCE WITH AND SHALL MEET ALL THE REQUIREMENTS OF PS2016005
11. TORQUE FOR FIND NO. 36 MOUNTING SCREWS TO BE 4/6 INCH POUNDS
12. TORQUE FOR FIND NO. 46, 49, 50, 67 AND 68 TO BE 18/22 INCH POUNDS
13. TORQUE FOR FIND NO. 53 TO BE 4/6 INCH POUNDS
14. TORQUE FOR FIND NO. 44 AND FIND NO. 56 TO BE 137/157 INCH POUNDS
15. FIND NO. 40 SHALL BE SUPPLIED AS PART OF THIS ASSEMBLY
16. MARK COMPUTER ASSEMBLY AND RELATED PART NO., APPLICABLE DASH NO., SERIAL NO. AND CONTRACT NO. PER 1004260 AND SERIALIZE PER ND1002023
17. FINISH SURFACE [2-2-] PER ICD NAA MH01-01302-116 THIS ASSEMBLY MUST BE CAPABLE OF MEETING ELECTRICAL BONDING REQUIREMENTS OF ICD NAA MH01-01302-116
18. THE FOLLOWING RESISTANCES TO BE NOT MORE THAN 20 MILLIOHMS:
    a. RESISTANCE BETWEEN FIND NO.1 AND FIND NO.6
    b. RESISTANCE BETWEEN FIND NO.2 AND FIND NO.5
    c. RESISTANCE BETWEEN FIND NO.3 AND FIND NO.4 OR BETWEEN FIND NO.69 AND FIND NO.70
19. LEAK TEST: PURGE AND FILL WITH 30±10 PSIA DRY NITROGEN. STORE AT ROOM AMBIENT FOR 24 ±5 HOURS. TEST PRESSURE FOR ΔP<0.5 PSIA. ALL MEASUREMENTS MADE AT STANDARD TEMPERATURE ±2°C. FOLLOWING TEST BLEED TO 17±1.0 PSIA
20. BOND FIND NO.58 TO FIND NO.6 IN POSITION SHOWN, USING 1006336
21. REFERENCED MODULES MUST NOT BE REPLACED OR INTERCHANGED WITHOUT REPEATING NOMINAL SELECTION PROCEDURE PER NOTE 10
22. THE VALUE OF C1 TO BE DETERMINED AT ELECTRICAL TEST AND SELECTED FROM APPROPRIATE CHART
23. WHEN THE VALUE OF C1 IS "0" NO COMPONENT SHALL BE USED
24. ENCAPSULATE AREA SHOWN AFTER SELECTION AND INSTALLATION OF C1 USING ND1002009 METHOD C OR D USING PRIMER PER SCD 1012513
25. WELD PER ND1002005
26. ASSEMBLE HARDWARE WITH SMOOTH FACE OF FIND NO.39 IN CONTACT WITH SCREW HEAD
27. FIND NO.39, 46, 55 & 57 TO BE DISCARDED AND REPLACED WITH NEW PARTS EACH TIME THEY ARE DISASSEMBLED
28. SEAL EXPOSED HARDWARE ASSEMBLIES WITH .002 MIN THICK COATING OF FIND NO.66, OVERALL COMPUTER ASSEMBLY DIMENSIONS SHALL NOT BE EXCEEDED

REVISIONS					
SYM	ZONE	DESCRIPTION	BY	CHK	DATE
A		REVISED PER TDRR 26062			
B		REVISED PER TDRR 30868			
C		REVISED PER TDRR 30890			
D		REVISED PER TDRR 32353			
E		REVISED PER TDRR 32973			

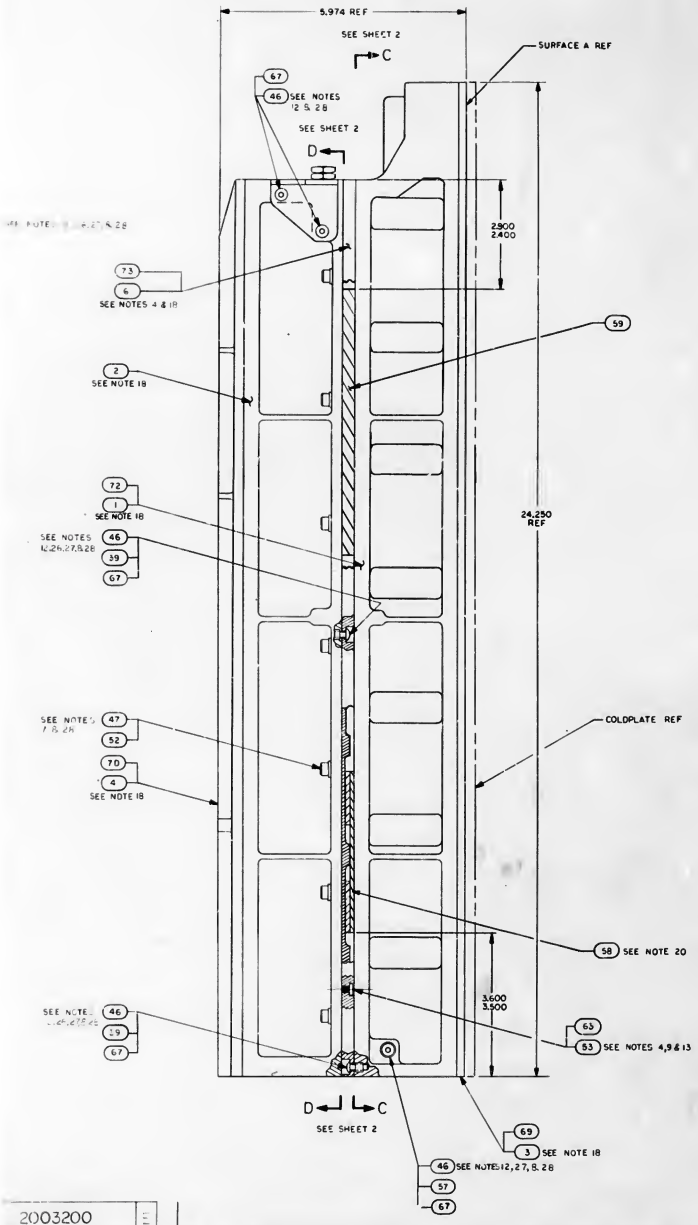

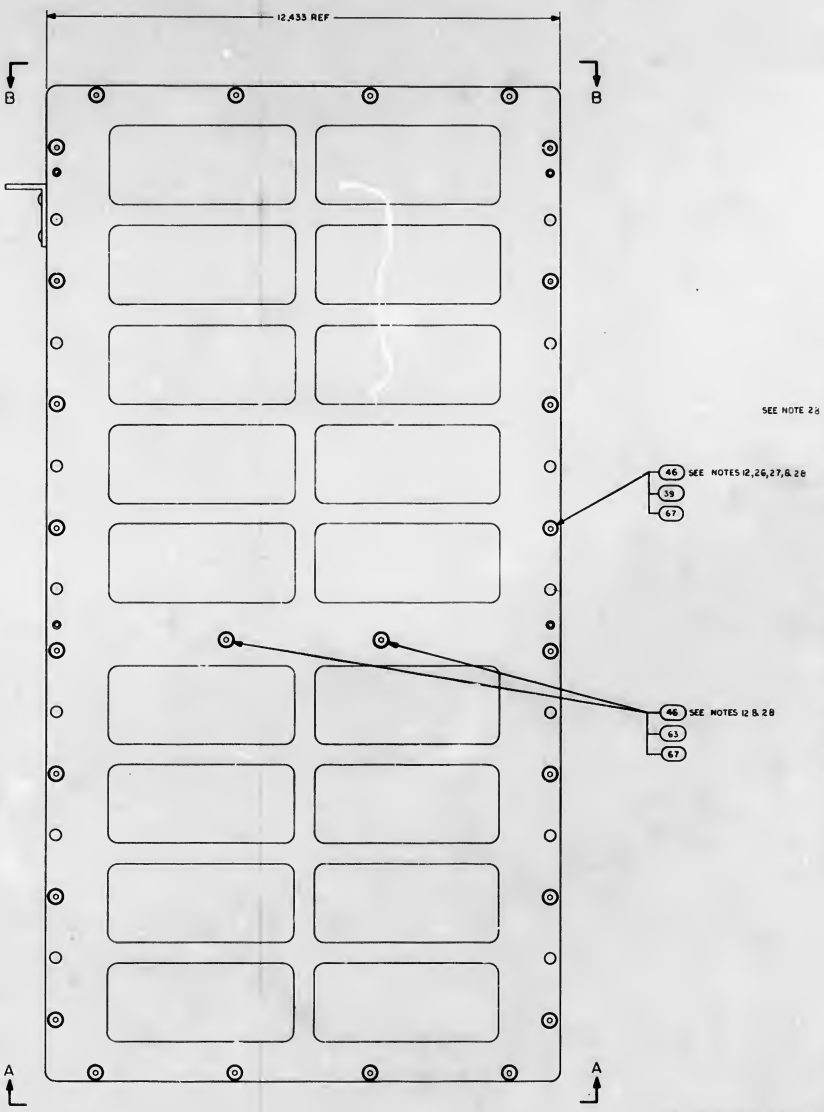

			2005943	AGC WIRE LIST	REF
2	—	—	2003953-021	POWER SUPPLY MOD A30-31	74
1	1	—	2003978-001	MID-SPACER	73
1	1	—	2003092-021	TRAY A WIRE ASSY	72
2	2	—	2003140-021	ROPE DRIVER MODULE B16-17	71
1	1	—	2003976-011	TRAY B COVER	70
1	1	—	2003977-011	TRAY A COVER	69
2	2	—	1001489-36	SCREW, HEX SOCKET HEAD	68
66	66	—	1006783-26	SCREW, BUTTON HEAD HEX SOCKET	67
AR	AR	AR	1006338-000	SEALING COMPOUND, SILICONE RTV 88 R	66
AR	AR	AR	1006176-22	INSULATION SLEEVING, ELECTRICAL	65
—	—	X	2005036	AGC WIRE LIST	REF
1	1	1	SEE NOTE 22	CAPACITOR	64
10	10	10	2004148-007	WASHER, FLAT	63
1	1	1	2003981-011	SENSE AMPLIFIER MODULE, FIXED MEMORY B14	62
AR	AR	AR	2004895-002	SHIM AGC	61
AR	AR	AR	2004895-001	SHIM AGC	60
1	1	1	2004899-001	PAD VIBRATION	59
1	1	1	2003970	VIBRATION PAD ASSY	58
4	4	4	NAS1598-D08N	WASHER, SEALING	57
1	1	1	2018773	VALVE PRESSURE ASSEMBLY	56
1	1	1	1000159-5	PACKING, PREFORMED "O" RING	55
2	2	2	2004984-001	WASHER, FLAT	54
8	8	8	2004130	PAD, THREADED	53
18	18	18	2004894-014	WASHER, FLAT	52
4	4	4	2004894-012	WASHER, FLAT	51
—	—	2	1001489-34	SCREW, HEX SOCKET HEAD	50
4	4	4	1004722-2	SCREW, CAPTIVE	49
1	1	1	1000159-7	PACKING, PREFORMED "O" RING	48
18	18	18	MS16996-14	SCREW, SOCKET HEAD, CAP	47
—	—	66	1006783-25	SCREW, BUTTON HEAD, HEX SOCKET	46
2	2	2	2006347	GASKET, PLATE	45
1	1	1	2004986	PLUG, MACHINE THREAD	44
1	1	1	1004260-19	NAME PLATE, TYPE 3	43
1	1	1	2004113-001	BRACKET, CABLE	42
1	1	1	2004118	COVER, POTTED	41
1	1	1	1006380	GASKET, RETAINED	40
58	58	58	2004707	WASHER, KNURLED	39
3	3	3	2003067-001	INTERFACE MODULE A27-29	38
2	2	2	2003070-021	INTERFACE MODULE A25-26	37
—	2	2	2003953-011	POWER SUPPLY MODULE A30-31	36
1	1	1	2003121-231	LOGIC MODULE A24	35
1	1	1	2003121-221	LOGIC MODULE A23	34
1	1	1	2003121-211	LOGIC MODULE A22	33
1	1	1	2003121-191	LOGIC MODULE A21	32
1	1	1	2003121-181	LOGIC MODULE A20	31
1	1	1	2003121-171	LOGIC MODULE A19	30
1	1	1	2003121-161	LOGIC MODULE A18	29
1	1	1	2003121-151	LOGIC MODULE A17	28
1	1	1	2003121-141	LOGIC MODULE A16	27
1	1	1	2003121-131	LOGIC MODULE A15	26
1	1	1	2003121-121	LOGIC MODULE A14	25
1	1	1	2003121-111	LOGIC MODULE A13	24
1	1	1	2003121-091	LOGIC MODULE A12	23
4	4	4	2003121-081	LOGIC MODULE A8-11	22
1	1	1	2003121-071	LOGIC MODULE A7	21
1	1	1	2003121-061	LOGIC MODULE A6	20
1	1	1	2003121-051	LOGIC MODULE A5	19
1	1	1	2003121-041	LOGIC MODULE A4	18
1	1	1	2003121-031	LOGIC MODULE A3	17
1	1	1	2003121-021	LOGIC MODULE A2	16
1	1	1	2003121-011	LOGIC MODULE A1	15
—	—	2	2003140-011	ROPE DRIVER MODULE B16-17	14
1	1	1	2003027-021	STRAND SELECT MODULE B15	13
1	1	1	2003982-011	SENSE AMPL MOD, ERASABLE MEMORY B13	12
1	1	1	2003111-011	ERASABLE MEMORY MODULE B12	11
1	1	1	2003026-021	CURRENT SWITCH MODULE B11	10
2	2	2	2003114-011	ERASABLE DRIVER MODULE B9-10	9
1	1	1	2003983-011	ALARM MODULE B8	8
1	1	1	2003036-001	OSCILLATOR MODULE B7	7
—	—	1	2003978-000	MID SPACER	6
1	1	1	2003059-021	INTERCONNECTION HEADER ASSEMBLY	5
—	—	1	2003976-000	TRAY B COVER	4
—	—	1	2003977-000	TRAY A COVER	3
1	1	1	2003093-011	TRAY B WIRED ASSEMBLY	2
—	—	1	2003092-011	TRAY A WIRED ASSEMBLY	1
QTY REQ'D/NG.DOC	QTY REQ'D		PART OR IDENTIFYING NO.	NOMENCLATURE OR DESCRIPTION	FIND NO.

LIST OF MATERIALS

UNLESS OTHERWISE SPECIFIED DIMENSIONS ARE IN INCHES
CAPACITOR VALUES ARE IN μf
RESISTOR VALUES ARE IN OHMS
TOLERANCES ON
FRACTIONS ± DECIMALS ± ANGLES ±
DO NOT SCALE THIS DRAWING
MATERIAL —

2003991
NEXT ASSY | USED ON
APPLICATION

MIT INSTRUMENTATION LAB CAMBRIDGE 39, MASS.

DRAWN
CHECKED
APPROVED
APPROVED
APPROVED MIT
APPROVED NAC

MANNED SPACECRAFT CENTER HOUSTON, TEXAS

COMPUTER ASSEMBLY

CODE IDENT NO. 80230 | SIZE J | DRAWING NO. 2003200
SCALE 1/1 | SHEET 1 OF 2

2003200

2003200

C1	
PART NO.	VALUE UUF
1006777-1	NI
-15	150
-18	330
-20	470
-22	680
-23	820
SEE NOTE 23	0

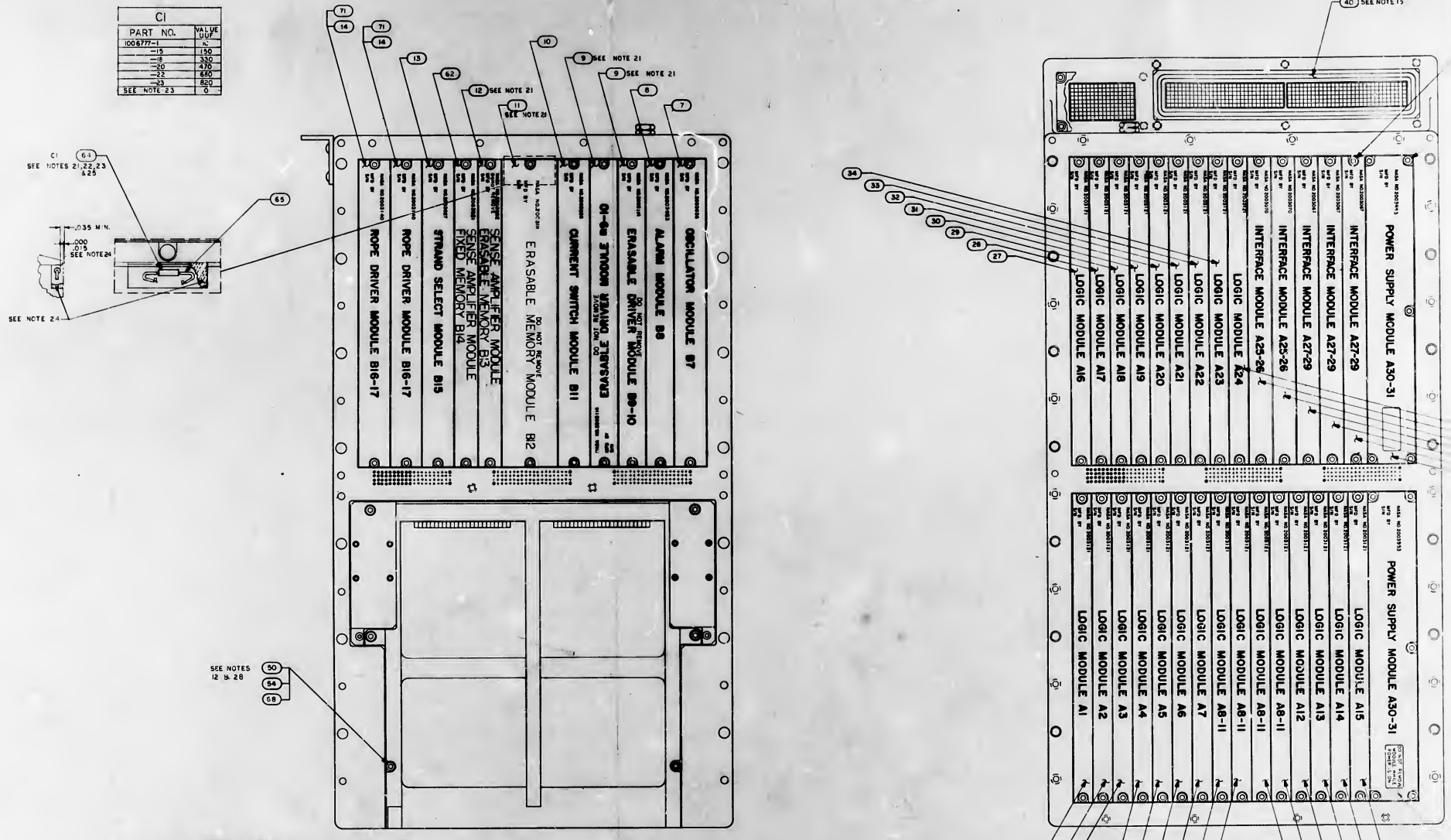

PACKAGING REFERENCE DRAWINGS:
1. AGC CONNECTOR COVER KIT 2014399
2. AGC HANDLING FIXTURE ASSY 2014282
3. AGC SHIPPING CONTAINER 1006421

2003200 E

REVISIONS					
SYM	ZONE	DESCRIPTION	BY	CHK	DATE	APP BY
A		REVISED PER TDRR 25062				
B		REVISED PER TDRR 30887				
C		REVISED PER TDRR 30990				
D		REVISED PER TDRR 32353				
E		REVISED PER TDRR 32873				

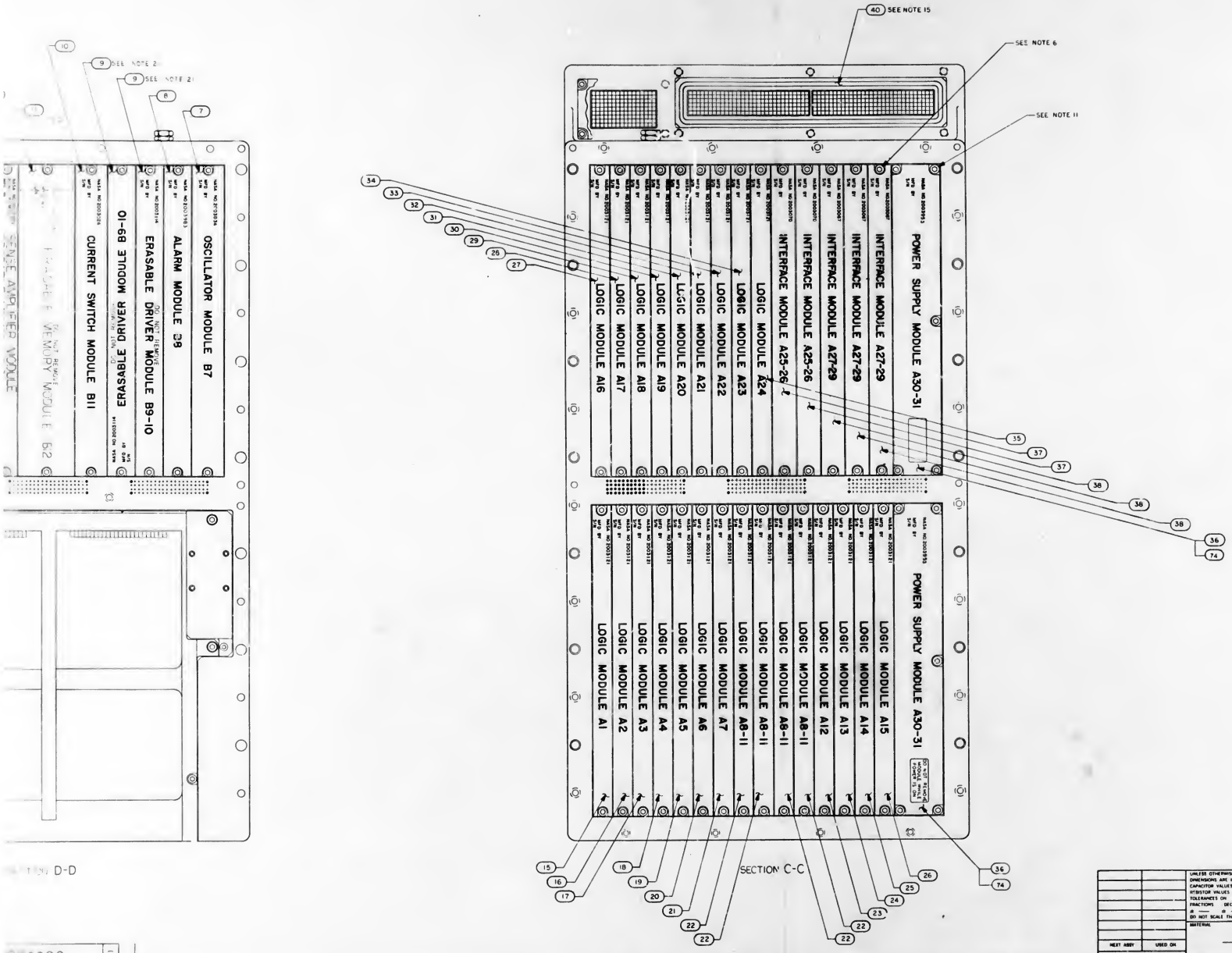

QTY REQD	PART OR IDENTIFYING NO	NOMENCLATURE OR DESCRIPTION	FIND NO
		LIST OF MATERIALS	

MIT INSTRUMENTATION LAB
CAMBRIDGE MASS

MANNED SPACECRAFT CENTER
HOUSTON TEXAS

COMPUTER ASSEMBLY

UNLESS OTHERWISE SPECIFIED DIMENSIONS ARE IN INCHES CAPACITOR VALUES ARE IN µf RESISTOR VALUES ½W IN OHMS TOLERANCES ON FRACTIONS DECIMALS ANGLES ± ± ± DO NOT SCALE THIS DRAWING

MATERIAL

NEXT ASSY | USED ON | APPLICATION

DRAWN | CHECKED | APPROVED | APPROVED MIT | APPROVED MSC

CODE IDENT NO 80230 | SIZE J | DRAWING NO 2003200

SCALE 1/1 | SHEET 2 OF 2

2003200

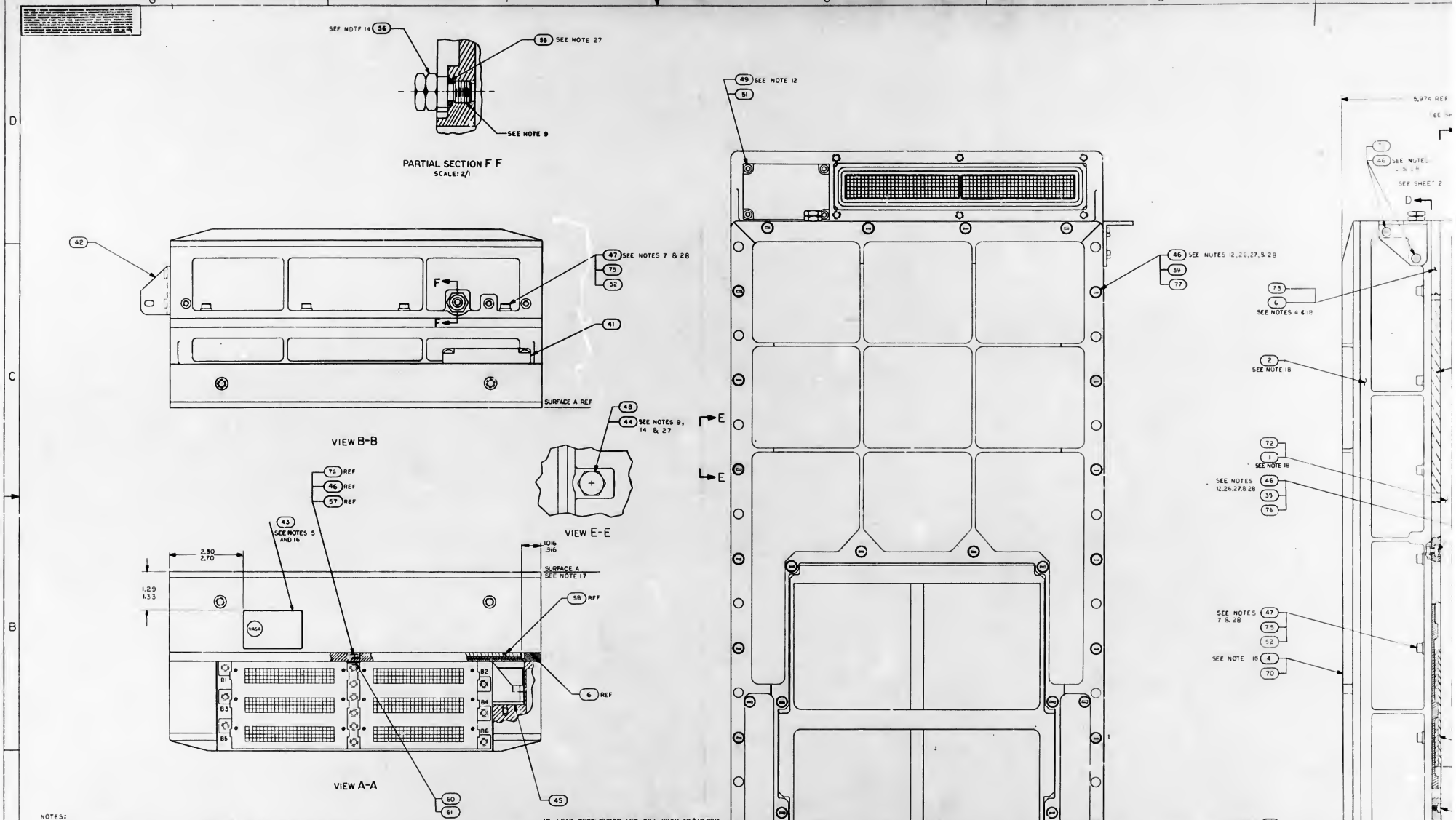

NOTES:

1. INTERPRET DRAWING IN ACCORDANCE WITH STANDARDS PRESCRIBED BY MIL-D-70327
2. PHANTOM LINES DENOTE AGC COLDPLATE AND HANDLING FIXTURE TO BE SUPPLIED BY NORTH AMERICAN AVIATION, INC
3. ADD SILICONE COMPOUND 1006879 TO MODULE MATING METAL SURFACES AND TRAY MATING SURFACES
4. ASSEMBLE FIND NO.53 AND FIND NO.63 TO FIND NO.6 AND FIND NO.6 TO FIND NO.2 PRIOR TO ASSEMBLY OF FIND NO.2 TO FIND NO.1 OR FIND NO.72
5. BOND FIND NO.43 TO FIND NO.1 OR FIND NO. 72 PER ND1002004 TYPE IV
6. UNLESS OTHERWISE SPECIFIED TORQUE ALL MODULE MOUNTING SCREWS 15/19 INCH POUNDS
7. TORQUE FIND NO.47 OR FIND NO.75 TO 28/32 INCH POUNDS
8. FINISH IS REQUIRED TO SATISFY ICD GAEL 510-10001
9. APPLY SEALING COMPOUND MIL-S-22473 GRADE H TO FIND NO.53, FIND NO.56 AND FIND NO.44
10. COMPLETED ASSEMBLY SHALL BE TESTED IN ACCORDANCE WITH AND SHALL MEET ALL THE REQUIREMENTS OF PS2016005
11. TORQUE FOR FIND NO. 36 MOUNTING SCREWS TO BE 4/6 INCH POUNDS
12. TORQUE FOR FIND NO. 46, 49, 50, 76 AND 68 TO BE 18/22 INCH POUNDS
13. TORQUE FOR FIND NO. 53 TO BE 4/6 INCH POUNDS
14. TORQUE FOR FIND NO. 44 AND FIND NO. 66 TO BE 137/157 INCH POUNDS
15. FIND NO. 40 SHALL BE SUPPLIED AS PART OF THIS ASSEMBLY
16. MARK COMPUTER ASSEMBLY AND RELATED PART NO., APPLICABLE DASH NO., SERIAL NO. AND CONTRACT NO. PER 1004260 AND SERIALIZE PER ND1002023
17. FINISH SURFACE [A-A] PER ICD NAA MH01-01302-116 THIS ASSEMBLY MUST BE CAPABLE OF MEETING ELECTRICAL BONDING REQUIREMENTS OF ICD NAA MH01-01302-116
18. THE FOLLOWING RESISTANCES TO BE NOT MORE THAN 20 MILLIOHMS:
    a. RESISTANCE BETWEEN FIND NO.1 AND FIND NO.6
    b. RESISTANCE BETWEEN FIND NO.2 AND FIND NO.5
    c. RESISTANCE BETWEEN FIND NO.3 AND FIND NO.4 OR BETWEEN FIND NO.69 AND FIND NO.70
19. LEAK TEST: PURGE AND FILL WITH 30±10 PSIA DRY NITROGEN. STORE AT ROOM AMBIENT FOR 24 ±5 HOURS. TEST PRESSURE FOR ΔP=±0.5 PSIA. ALL MEASUREMENTS MADE AT STANDARD TEMPERATURE ±2°C. FOLLOWING TEST BLEED TO 17±1.0 PSIA
20. BOND FIND NO.58 TO FIND NO.6 IN POSITION SHOWN USING 1006338
21. REFERENCED MODULES MUST NOT BE REPLACED OR INTERCHANGED WITHOUT REPEATING NOMINAL SELECTION PROCEDURE PER NOTE 10
22. THE VALUE OF C1 TO BE DETERMINED AT ELECTRICAL TEST AND SELECTED FROM APPROPRIATE CHART
23. WHEN THE VALUE OF C1 IS '0' NO COMPONENT SHALL BE USED
24. ENCAPSULATE AREA SHOWN AFTER SELECTION AND INSTALLATION OF C1 USING ND1002009 METHOD C OR D USING PRIMER PER SCD 1012513
25. WELD PER ND1002005
26. ASSEMBLE HARDWARE WITH SMOOTH FACE OF FIND NO.39 IN CONTACT WITH SCREW HEAD
27. FIND NO.39, 48, 55 & 57 TO BE DISCARDED AND REPLACED WITH NEW PARTS EACH TIME THEY ARE DISASSEMBLED
28. SEAL EXPOSED HARDWARE ASSEMBLIES WITH .002 MIN THICK COATING OF FIND NO.66, OVERALL COMPUTER ASSEMBLY DIMENSIONS SHALL NOT BE EXCEEDED
29. KEEP ALL MATING THREADS OF SCREWS, TRAY AND MID-SPACER INSERTS FREE OF SILICONE COMPOUND

2003200 F

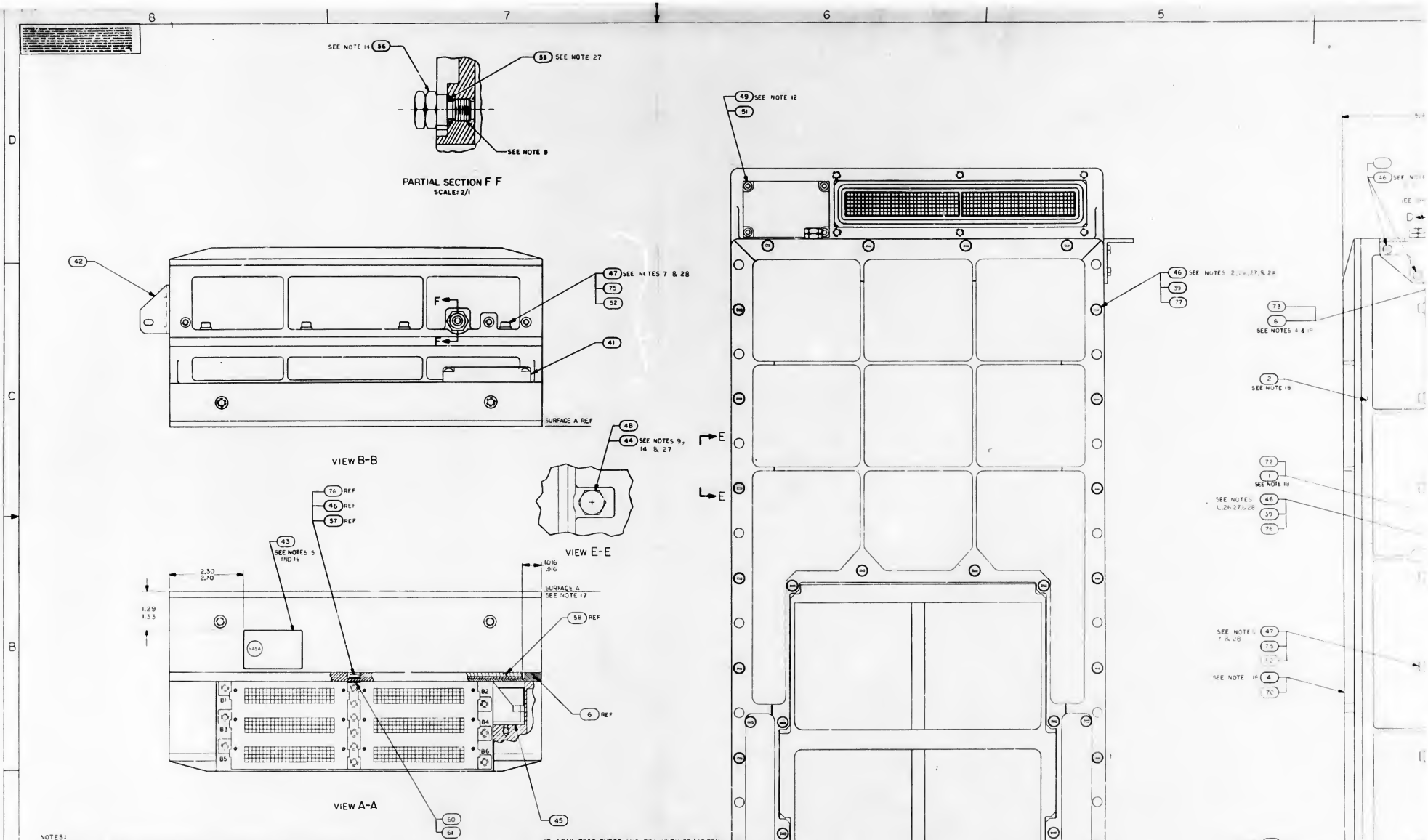

NOTES:

1. INTERPRET DRAWING IN ACCORDANCE WITH STANDARDS PRESCRIBED BY MIL-D-70327
2. PHANTOM LINES DENOTE AGC COLDPLATE AND HANDLING FIXTURE TO BE SUPPLIED BY NORTH AMERICAN AVIATION, INC
3. ADD SILICONE COMPOUND 1006879 TO MODULE MATING METAL SURFACES AND TRAY MATING SURFACES
4. ASSEMBLE FIND NO.53 AND FIND NO.63 TO FIND NO.6 AND FIND NO.6 TO FIND NO.2 PRIOR TO ASSEMBLY OF FIND NO.2 TO FIND NO.1 OR FIND NO.72
5. BOND FIND NO.43 TO FIND NO.1 OR FIND NO. 72 PER ND1002004 TYPE IV
6. UNLESS OTHERWISE SPECIFIED TORQUE ALL MODULE MOUNTING SCREWS 15/19 INCH POUNDS
7. TORQUE FIND NO.47 OR FIND NO. 75 TO 29/32 INCH POUNDS
8. FINISH IS REQUIRED TO SATISFY ICD GAEL 510-10001
9. APPLY SEALING COMPOUND MIL-S-22473 GRADE H TO FIND NO.53, FIND NO.56 AND FIND NO. 44
10. COMPLETED ASSEMBLY SHALL BE TESTED IN ACCORDANCE WITH AND SHALL MEET ALL THE REQUIREMENTS OF PS2016005
11. TORQUE FOR FIND NO. 36 MOUNTING SCREWS TO BE 4/6 INCH POUNDS
12. TORQUE FOR FIND NO. 46, 49, 50, 76 AND 68 TO BE 18/22 INCH POUNDS
13. TORQUE FOR FIND NO.53 TO BE 4/6 INCH POUNDS
14. TORQUE FOR FIND NO. 44 AND FIND NO. 56 TO BE 137/157 INCH POUNDS
15. FIND NO.40 SHALL BE SUPPLIED AS PART OF THIS ASSEMBLY
16. MARK COMPUTER ASSEMBLY AND RELATED PART NO., APPLICABLE DASH NO., SERIAL NO. AND CONTRACT NO. PER 1004260 AND SERIALIZE PER ND1002023
17. FINISH SURFACE A PER ICD NAA MHDI-01302-116 THIS ASSEMBLY MUST BE CAPABLE OF MEETING ELECTRICAL BONDING REQUIREMENTS OF ICD NAA MHDI-01302-116
18. THE FOLLOWING RESISTANCES TO BE NOT MORE THAN 20 MILLIOHMS:
    a. RESISTANCE BETWEEN FIND NO.1 AND FIND NO.6
    b. RESISTANCE BETWEEN FIND NO.2 AND FIND NO.5
    c. RESISTANCE BETWEEN FIND NO.3 AND FIND NO.4 OR BETWEEN FIND NO.69 AND FIND NO.70
19. LEAK TEST: PURGE AND FILL WITH 30±1.0 PSIA DRY NITROGEN. STORE AT ROOM AMBIENT FOR 24 ±5 HOURS. TEST PRESSURE FOR ΔP<0.5 PSIA. ALL MEASUREMENTS MADE AT STANDARD TEMPERATURE ±2°C FOLLOWING TEST BLEED TO 17±1.0 PSIA
20. BOND FIND NO.58 TO FIND NO.6 IN POSITION SHOWN, USING 1006338
21. REFERENCED MODULES MUST NOT BE REPLACED OR INTERCHANGED WITHOUT REPEATING NOMINAL SELECTION PROCEDURE PER NOTE 10
22. THE VALUE OF C1 TO BE DETERMINED AT ELECTRICAL TEST AND SELECTED FROM APPROPRIATE CHART
23. WHEN THE VALUE OF C1 IS "0" NO COMPONENT SHALL BE USED
24. ENCAPSULATE AREA SHOWN AFTER SELECTION AND INSTALLATION OF C1 USING ND1002009 METHOD C OR D USING PRIMER PER SCD 1012513
25. WELD PER ND1002005
26. ASSEMBLE HARDWARE WITH SMOOTH FACE OF FIND NO.39 IN CONTACT WITH SCREW HEAD
27. FIND NO.39, 48, 55 & 57 TO BE DISCARDED AND REPLACED WITH NEW PARTS EACH TIME THEY ARE DISASSEMBLED
28. SEAL EXPOSED HARDWARE ASSEMBLIES WITH .002 MIN THICK COATING OF FIND NO.66, OVERALL COMPUTER ASSEMBLY DIMENSIONS SHALL NOT BE EXCEEDED
29. KEEP ALL MATING THREADS OF SCREWS, TRAY AND MID-SPACER INSERTS FREE OF SILICONE COMPOUND

2003200

REVISIONS					
SYM	ZONE	DESCRIPTION	BY	CHK	DATE	APPROVED
A		REVISED PER TDRR 28062				
B		REVISED PER TDRR 30867				
C		REVISED PER TDRR 30890				
D		REVISED PER TDRR 32353				
E		REVISED PER TDRR 32873				
F		REVISED PER TDRR [illegible]				

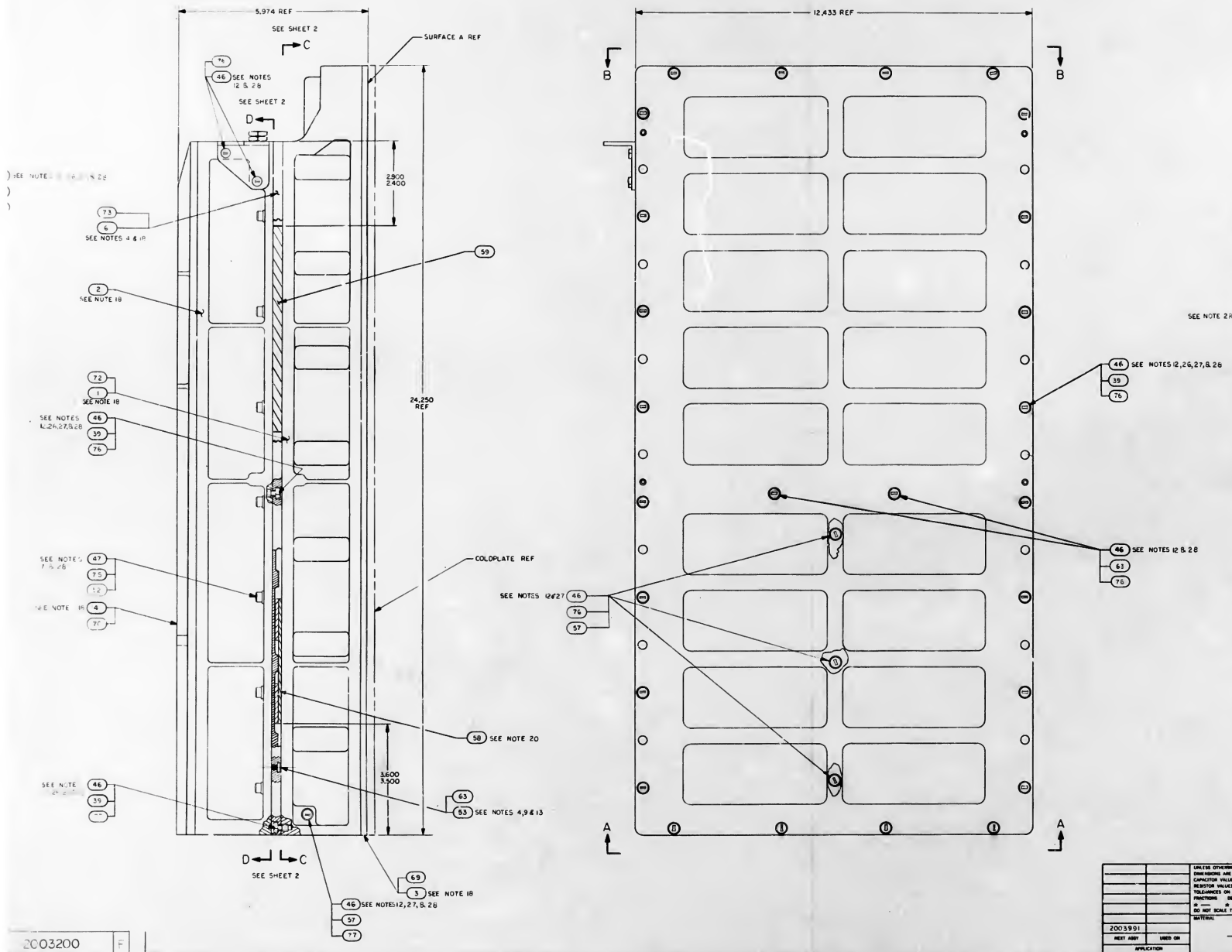

		—	2003943	AGC WIRE LIST	REF
33	33	—	2004732-002	SCREW COATED	77
33	33	—	2004732-001	SCREW COATED	76
18	18	—	2004732-003	SCREW COATED	75
2	—	—	2003953-021	POWER SUPPLY MOD A30-31	74
1	1	—	2003978-001	MID-SPACER	73
1	1	—	2003092-021	TRAY A WIRE ASSY	72
2	2	—	2003140-021	ROPE DRIVER MODULE B16-B1	71
1	1	—	2003976-011	TRAY B COVER	70
1	1	—	2003977-011	TRAY A COVER	69
2	2	—	1001489-36	SCREW, HEX SOCKET HEAD	68
66	66	—	1006783-28	SCREW, BUTTON HEAD HEX SOCKET	67
AR	AR	AR	1006338-GGG	SEALING COMPOUND, SILICONE RTV-108	66
AR	AR	AR	1006276-22	INSULATION SLEEVING, ELEC	65
—	—	—	2003036	AGC WIRE LIST	REF
1	1	1	SEE NOTE 22	CAPACITOR	64
10	10	10	2004148-007	WASHER, FLAT	63
1	1	1	2003981-011	SENSE AMPLIFIER MODULE, FIXED MEMORY B14	62
AR	AR	AR	2004895-002	SHIM AGC	61
AR	AR	AR	2004895-001	SHIM AGC	60
1	1	1	2004399-001	PAD VIBRATION	59
1	1	1	2003970	VIBRATION PAD ASSY	58
4	4	4	NAS1598-D08N	WASHER, SEALING	57
1	1	1	2018773	VALVE PRESSURE ASSEMBLY	56
1	1	1	1000159-5	PACKING, PREFORMED "O" RING	55
2	2	2	2004984-001	WASHER, FLAT	54
8	8	8	2004130	PAD, THREADED	53
18	18	18	2004894-014	WASHER, FLAT	52
4	4	4	2004894-012	WASHER, FLAT	51
—	—	2	1001489-34	SCREW, HEX SOCKET HEAD	50
4	4	4	1004722-2	SCREW, CAPTIVE	49
1	1	1	1000159-7	PACKING, PREFORMED "O" RING	48
66	66	18	MS16996-14	SCREW, SOCKET HEAD, CAP	47
—	—	66	1006783-25	SCREW, BUTTON HEAD, HEX SOCKET	46
2	2	2	1006347	GASKET, PLATE	45
1	1	1	2004986	PLUG, MACHINE THREAD	44
1	1	1	1004260-19	NAME PLATE, TYPE 3	43
1	1	1	2004113-001	BRACKET, CABLE	42
1	1	1	2004115	COVER, POTTED	41
1	1	1	1006380	GASKET, RETAINED	40
58	58	58	2004707	WASHER, KNURLED	39
3	3	3	2003067-031	INTERFACE MODULE A27-29	38
2	2	2	2003070-021	INTERFACE MODULE A25-26	37
—	2	2	2003953-011	POWER SUPPLY MODULE A30-31	36
1	1	1	2003121-231	LOGIC MODULE A24	35
1	1	1	2003121-221	LOGIC MODULE A23	34
1	1	1	2003121-211	LOGIC MODULE A22	33
1	1	1	2003121-191	LOGIC MODULE A21	32
1	1	1	2003121-181	LOGIC MODULE A20	31
1	1	1	2003121-171	LOGIC MODULE A19	30
1	1	1	2003121-161	LOGIC MODULE A18	29
1	1	1	2003121-151	LOGIC MODULE A17	28
1	1	1	2003121-141	LOGIC MODULE A16	27
1	1	1	2003121-131	LOGIC MODULE A15	26
1	1	1	2003121-121	LOGIC MODULE A14	25
1	1	1	2003121-111	LOGIC MODULE A13	24
1	1	1	2003121-091	LOGIC MODULE A12	23
4	4	4	2003121-081	LOGIC MODULE A8-11	22
1	1	1	2003121-071	LOGIC MODULE A7	21
1	1	1	2003121-061	LOGIC MODULE A6	20
1	1	1	2003121-051	LOGIC MODULE A5	19
1	1	1	2003121-041	LOGIC MODULE A4	18
1	1	1	2003121-031	LOGIC MODULE A3	17
1	1	1	2003121-021	LOGIC MODULE A2	16
1	1	1	2003121-011	LOGIC MODULE A1	15
—	—	2	2003140-011	ROPE DRIVER MODULE B16-17	14
1	1	1	2003027-021	STRAND SELECT MODULE B15	13
1	1	1	2003992-011	SENSE AMPL MOD, ERASABLE MEMORY B13	12
1	1	1	2003111-011	ERASABLE MEMORY MODULE B12	11
1	1	1	2003026-021	CURRENT SWITCH MODULE B11	10
2	2	2	2003114-011	ERASABLE DRIVER MODULE B9-10	9
1	1	1	2003983-011	ALARM MODULE B8	8
1	1	1	2003036-021	OSCILLATOR MODULE B7	7
—	—	—	2003978-000	MID SPACER	6
1	1	1	2003059-021	INTERCONNECTION HEADER ASSEMBLY	5
—	—	1	2003976-000	TRAY B COVER	4
—	—	1	2003977-000	TRAY A COVER	3
1	1	1	2003093-011	TRAY B WIRED ASSEMBLY	2
—	—	1	2003092-011	TRAY A WIRED ASSEMBLY	1
QTY REQUIRED	QTY REQUIRED	QTY REQUIRED	PART OR IDENTIFYING NO.	NOMENCLATURE OR DESCRIPTION	FIND NO.

LIST OF MATERIALS

SEE NOTE 2R

UNLESS OTHERWISE SPECIFIED DIMENSIONS ARE IN INCHES
CAPACITOR VALUES ARE IN μF
RESISTOR VALUES ARE IN OHMS
TOLERANCES ON:
FRACTIONS ± — DECIMALS ± — ANG ± —
DO NOT SCALE THIS DRAWING
MATERIAL —

2003991
NEXT ASSY | USED ON
APPLICATION

MIT INSTRUMENTATION LAB
CAMBRIDGE MASS

DRAWN
CHECKED
APPROVED
APPROVED
APPROVED MIT
APPROVED NASA

MANNED SPACECRAFT CENTER
HOUSTON, TEXAS

COMPUTER ASSEMBLY

CODE IDENT NO 80230 | SIZE J | DRAWING NO. 2003200
SCALE 1/1 | SHEET 1 OF 2

2003200 F

REVISIONS					
ZONE	REV	DESCRIPTION	BY	CHK	DATE
	A	REVISED PER TDRR 28062			
	B	REVISED PER TDRR 30887			
	C	REVISED PER TDRR 30890			
	D	REVISED PER TDRR 32353			
	E	REVISED PER TDRR 32971			
	F	REVISED PER TDRR 32867			

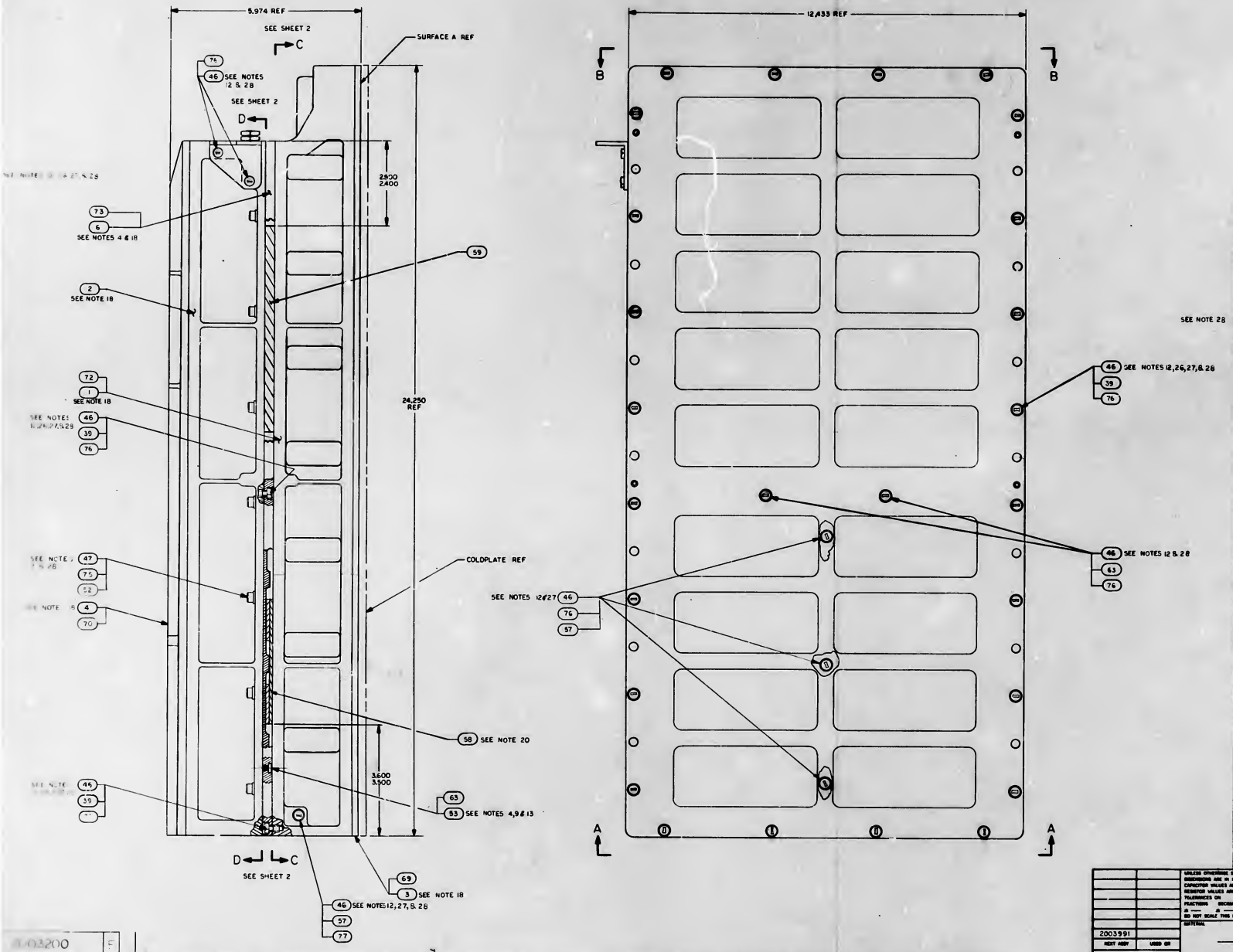

QTY REQUIRED			PART OR IDENTIFYING NO.	NOMENCLATURE OR DESCRIPTION	REF NO.
		—	2005943	AGC WIRE LIST	REF
33	33	—	2004732-002	SCREW COATED	77
33	33	—	2004732-001	SCREW COATED	76
18	18	—	2004732-003	SCREW COATED	75
2	—	—	2003953-021	POWER SUPPLY MOD A30-31	74
1	1	—	2003978-001	MID-SPACER	73
1	1	—	2003092-021	TRAY A WIRE ASSY	72
2	2	—	2003140-021	ROPE DRIVER MODULE B16-B17	71
1	1	—	2003976-011	TRAY B COVER	70
1	1	—	2003977-011	TRAY A COVER	69
2	2	—	1001489-34	SCREW, HEX SOCKET HEAD	68
80	80	—	1006783-25	SCREW, BUTTON HEAD HEX SOCKET	67
AR	AR	AR	1006338-000	SEALING COMPOUND, SILICONE RUBBER	66
AR	AR	AR	1008776-22	INSULATION, SLEEVING, ELECTRICAL	65
—	—	—	2003036	AGC WIRE LIST	REF
1	1	1	SEE NOTE 22	CAPACITOR	64
10	10	10	2004148-007	WASHER, FLAT	63
1	1	1	2003991-011	SENSE AMPLIFIER MODULE, FIXED MEMORY B14	62
AR	AR	AR	2004895-002	SHIM AGC	61
AR	AR	AR	2004895-001	SHIM AGC	60
1	1	1	2004899-001	PAD VIBRATION	59
1	1	1	2003970	VIBRATION PAD ASSY	58
4	4	4	NAS1598-D008	WASHER, SEALING	57
1	1	1	2018773	VALVE PRESSURE ASSEMBLY	56
1	1	1	1000159-8	PACKING, PREFORMED "O" RING	55
2	2	2	2004894-001	WASHER, FLAT	54
8	8	8	2004130	PAD, THREADED	53
18	18	18	2004894-014	WASHER, FLAT	52
4	4	4	2004894-012	WASHER, FLAT	51
—	—	2	1001489-34	SCREW, HEX SOCKET HEAD	50
4	4	4	1004722-2	SCREW, CAPTIVE	49
1	1	1	1000159-7	PACKING, PREFORMED "O" RING	48
48	48	18	MS16996-14	SCREW, SOCKET HEAD, CAP	47
—	—	66	1006783-25	SCREW, BUTTON HEAD, HEX SOCKET	46
2	2	2	1006347	GASKET, PLATE	45
1	1	1	2004986	PLUG, MACHINE THREAD	44
1	1	1	1004260-19	NAME PLATE, TYPE I	43
1	1	1	2004113-001	BRACKET, CABLE	42
1	1	1	2004115	COVER, POTTED	41
1	1	1	1006380	GASKET, RETAINED	40
58	58	58	2004707	WASHER, KNURLED	39
3	3	3	2003067-031	INTERFACE MODULE A27-29	38
2	2	2	2003070-021	INTERFACE MODULE A25-26	37
—	2	2	2003953-011	POWER SUPPLY MODULE A30-31	36
1	1	1	2003121-231	LOGIC MODULE A24	35
1	1	1	2003121-221	LOGIC MODULE A23	34
1	1	1	2003121-211	LOGIC MODULE A22	33
1	1	1	2003121-191	LOGIC MODULE A21	32
1	1	1	2003121-181	LOGIC MODULE A20	31
1	1	1	2003121-171	LOGIC MODULE A19	30
1	1	1	2003121-161	LOGIC MODULE A18	29
1	1	1	2003121-151	LOGIC MODULE A17	28
1	1	1	2003121-141	LOGIC MODULE A16	27
1	1	1	2003121-131	LOGIC MODULE A15	26
1	1	1	2003121-121	LOGIC MODULE A14	25
1	1	1	2003121-111	LOGIC MODULE A13	24
1	1	1	2003121-091	LOGIC MODULE A12	23
4	4	4	2003121-061	LOGIC MODULE A8-11	22
1	1	1	2003121-071	LOGIC MODULE A7	21
1	1	1	2003121-061	LOGIC MODULE A6	20
1	1	1	2003121-051	LOGIC MODULE A5	19
1	1	1	2003121-041	LOGIC MODULE A4	18
1	1	1	2003121-031	LOGIC MODULE A3	17
1	1	1	2003121-021	LOGIC MODULE A2	16
1	1	1	2003121-011	LOGIC MODULE A1	15
—	—	2	2003140-011	ROPE DRIVER MODULE B16-17	14
1	1	1	2003027-021	STRAND SELECT MODULE B15	13
1	1	1	2003992-011	SENSE AMPL MOD, ERASABLE MEMORY B13	12
1	1	1	2003111-011	ERASABLE MEMORY MODULE B12	11
1	1	1	2003026-021	CURRENT SWITCH MODULE B11	10
2	2	2	2003114-011	ERASABLE DRIVER MODULE B9-10	9
1	1	1	2003083-011	ALARM MODULE B8	8
1	1	1	2003036-021	OSCILLATOR MODULE B7	7
—	—	—	2003978-000	MID SPACER	6
—	1	1	2003059-021	INTERCONNECTION HEADER ASSEMBLY	5
—	—	1	2003976-000	TRAY B COVER	4
—	—	1	2003977-000	TRAY A COVER	3
1	1	1	2003093-011	TRAY B WIRED ASSEMBLY	2
—	—	1	2003092-011	TRAY A WIRED ASSEMBLY	1

LIST OF MATERIALS

UNLESS OTHERWISE SPECIFIED DIMENSIONS ARE IN INCHES. CAPACITOR VALUES ARE IN µf. RESISTOR VALUES ARE IN Ω-JΩ. TOLERANCES ON FRACTIONS ± — DECIMALS ± — ANGLES ± — DO NOT SCALE THIS DRAWING. MATERIAL —

2003991 NEXT ASSY USED ON APPLICATION

SELF INSTRUMENTATION LAB CAMBRIDGE, MASS.

DR DATE 7-8-66 CHECKED 8-26-66 APPROVED APPROVED APPROVED SELF 8-26-66 APPROVED

MANNED SPACECRAFT CENTER HOUSTON, TEXAS

COMPUTER ASSEMBLY

CODE IDENT NO. 80230 SIZE J DRAWING NO. 2003200 SCALE 1/1 SHEET 1 OF 2

2003200

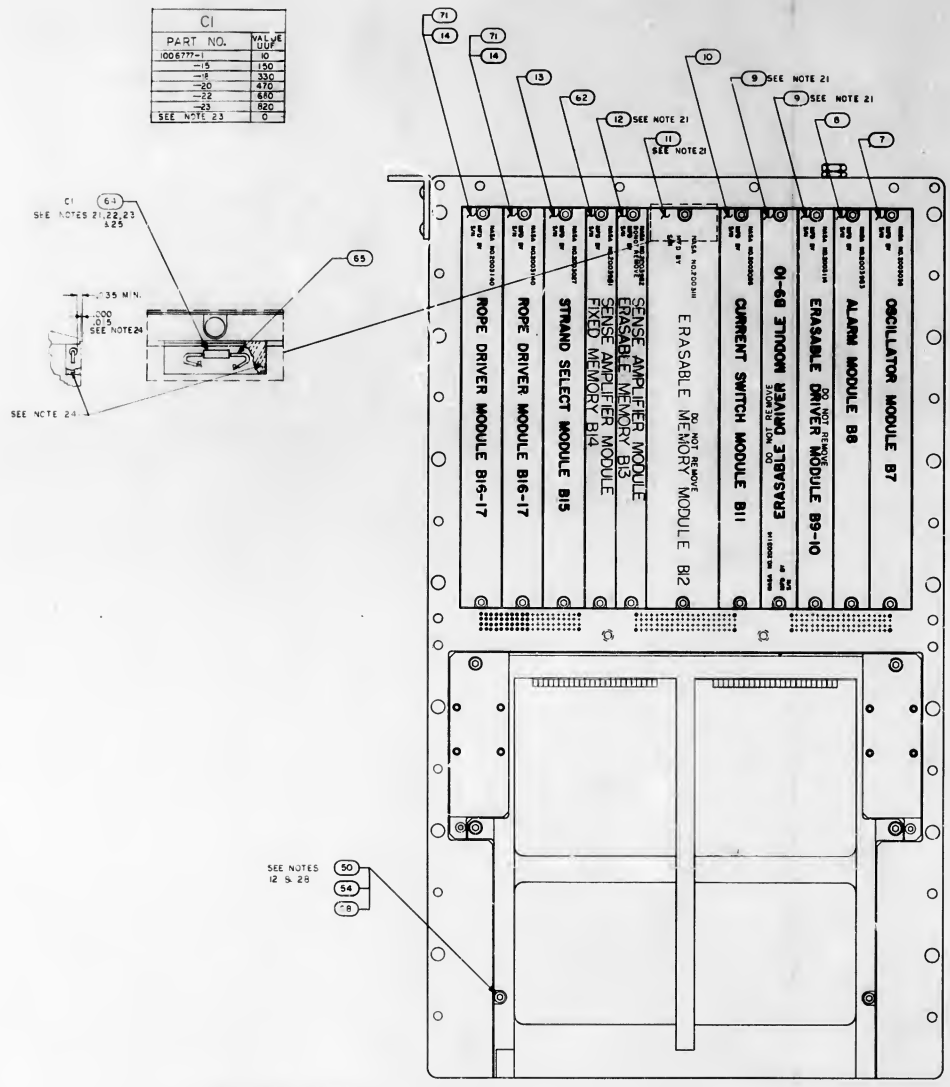

C1	
PART NO.	VALUE UUF
1006777-1	10
-15	150
-18	330
-20	470
-22	680
-23	820
SEE NOTE 23	0

SECTION D-D

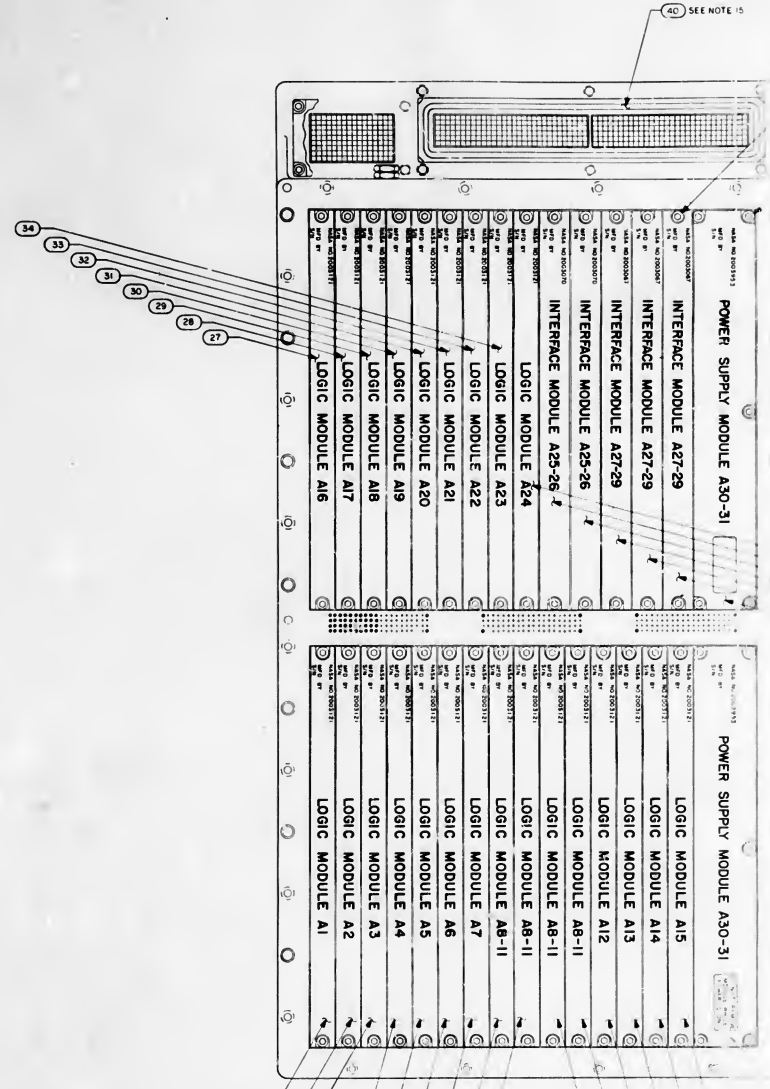

SECTION C-C

PACKAGING REFERENCE DRAWINGS :
1. AGC CONNECTOR COVER KIT 2014399
2. AGC HANDLING FIXTURE ASSY 2014262
3. AGC SHIPPING CONTAINER 1006421

2003200 F

C1	
PART NO.	VALUE UUF
1006777-1	10
-15	150
-18	330
-20	470
-22	680
-23	820
SEE NOTE 23	0

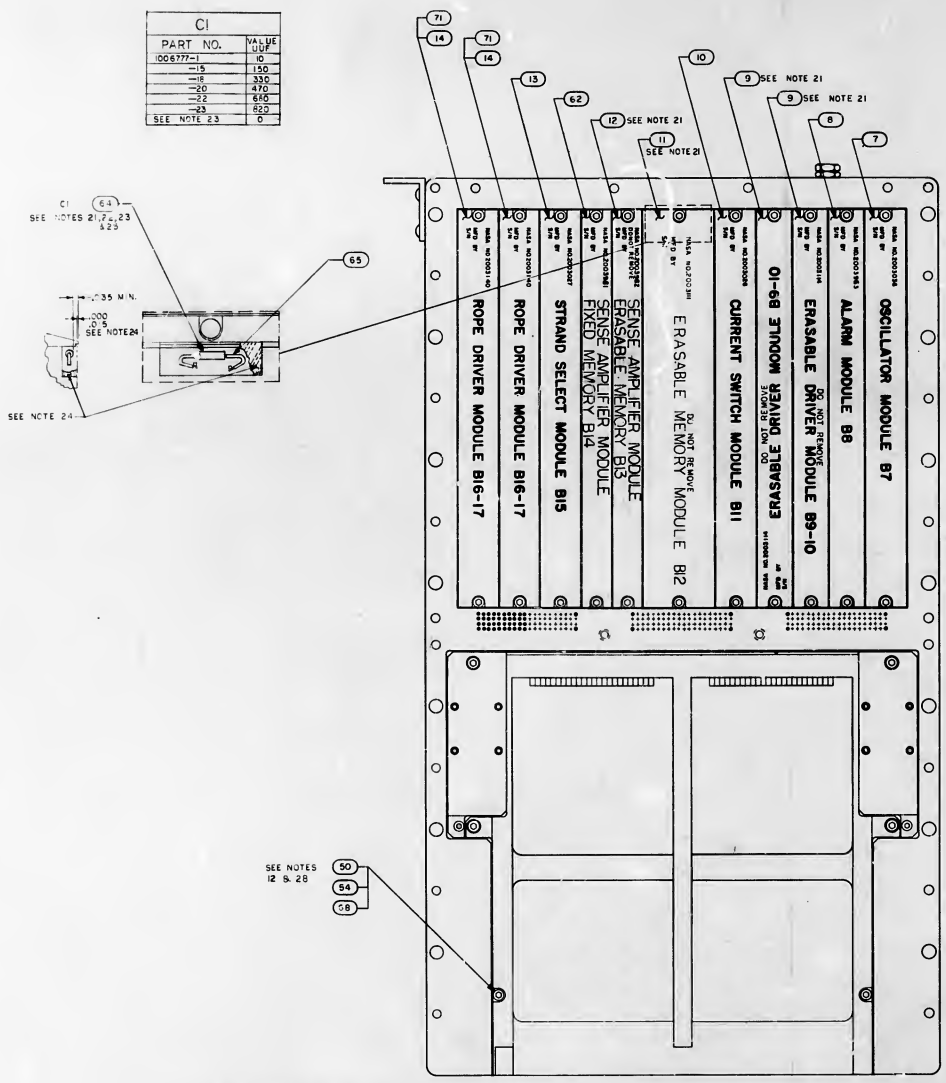

SECTION D-D

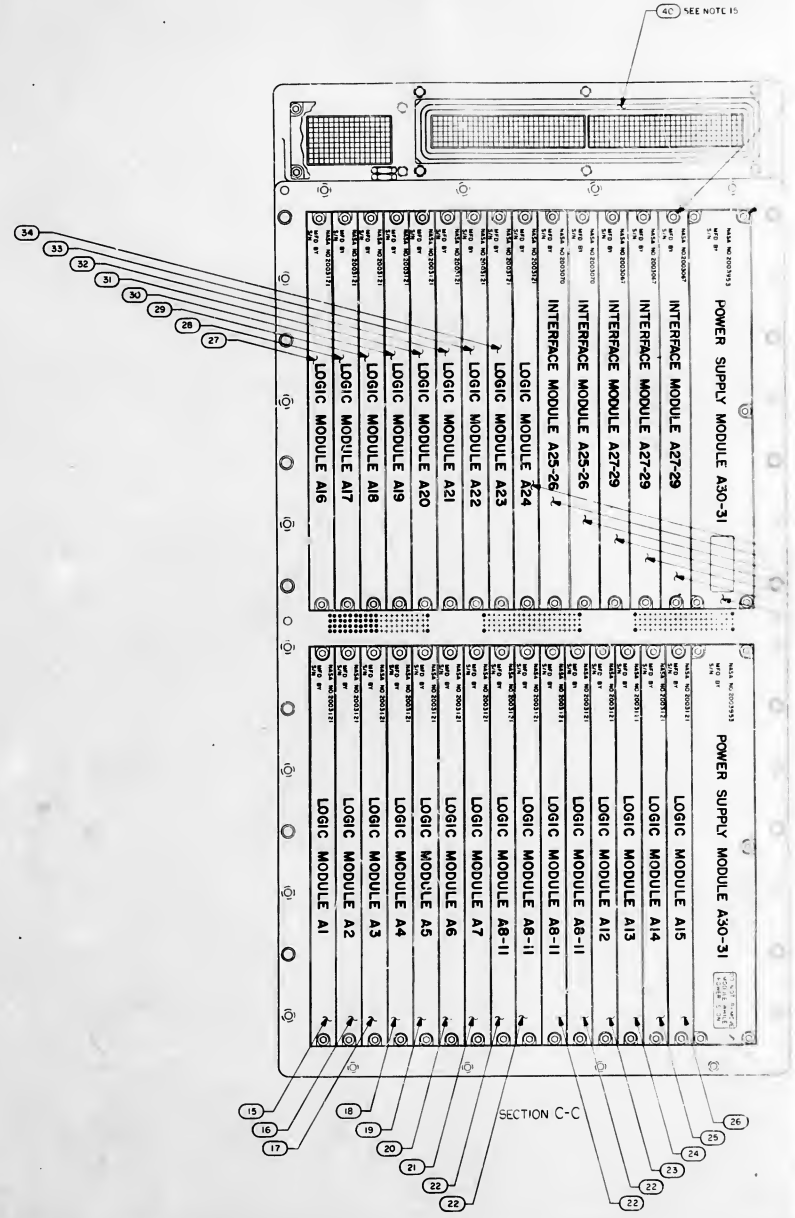

SECTION C-C

PACKAGING REFERENCE DRAWINGS:
1. AGC CONNECTOR COVER KIT 2014399
2. AGC HANDLING FIXTURE ASSY 2014282
3. AGC SHIPPING CONTAINER 1006421

2003200 F

REVISIONS					
BY-4	ZONE	DESCRIPTION	DR	CHK	DATE	APP MOVES
A		REVISED PER TORR 28062				
B		REVISED PER TORR 30889				
C		REVISED PER TORR 30890				
D		REVISED PER TORR 32353				
E		REVISED PER TORR 32875				
F		REVISED PER TORR 32867				

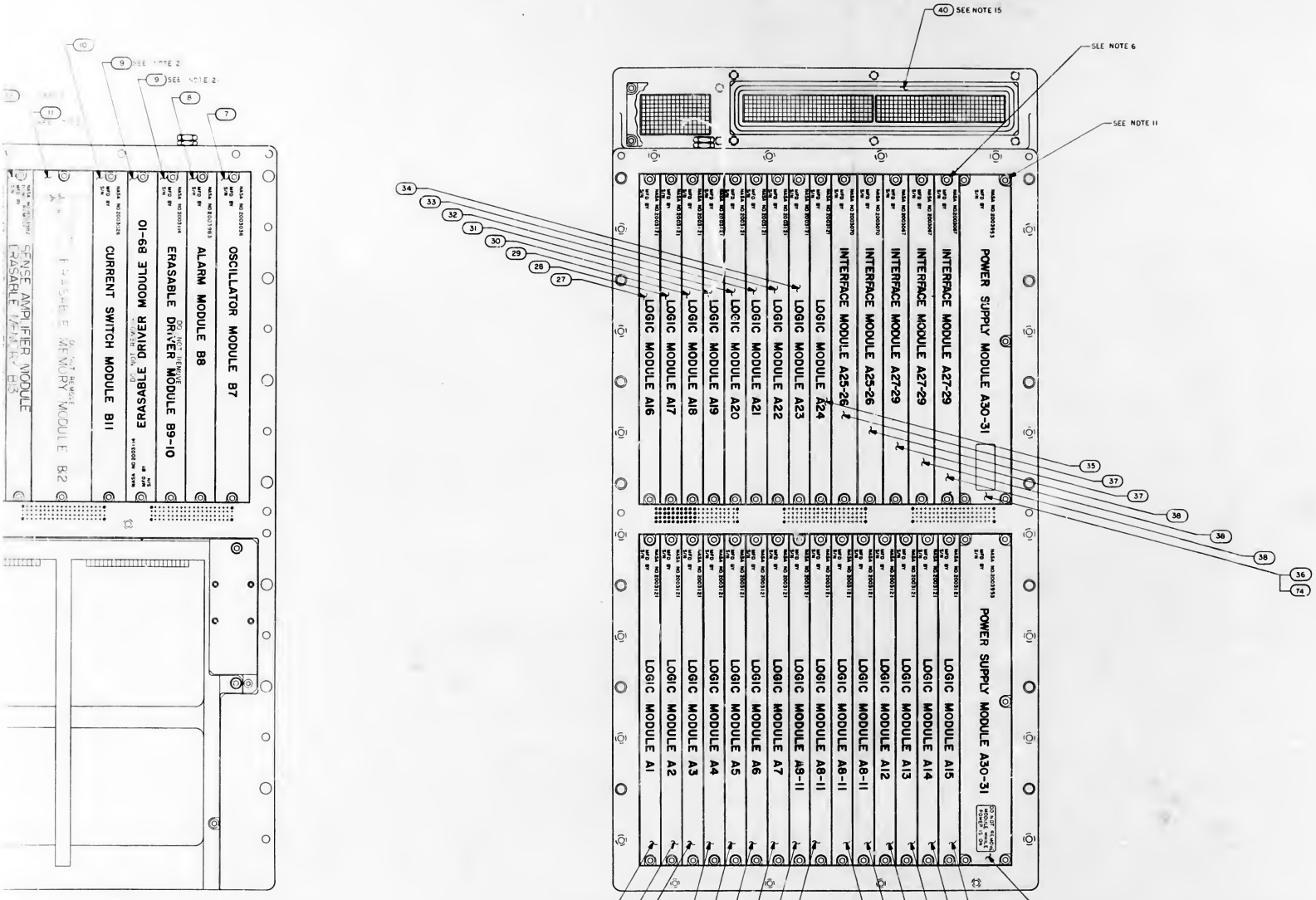

QTY REQD	PART OR IDENTIFYING NO	NOMENCLATURE OR DESCRIPTION	FIND NO
		LIST OF MATERIALS	

MIT INSTRUMENTATION LAB CAMBRIDGE MASS

MANNED SPACECRAFT CENTER HOUSTON TEXAS

COMPUTER ASSEMBLY

UNLESS OTHERWISE SPECIFIED DIMENSIONS ARE IN INCHES CAPACITOR VALUES ARE IN μf RESISTOR VALUES ARE IN OHMS TOLERANCES ON FRACTIONS DECIMALS ANGLES ± — ± — ± —
DO NOT SCALE THIS DRAWING

MATERIAL

NEXT ASSY | USED ON | APPLICATION

DRAWN | CHECKED | APPROVED | APPROVED MIT | APPROVED NASA

CODE IDENT NO 80230 | SIZE J | DRAWING NO 2003200

DATE | SCALE 1/1 | SHEET 2 OF 2

2003200 F

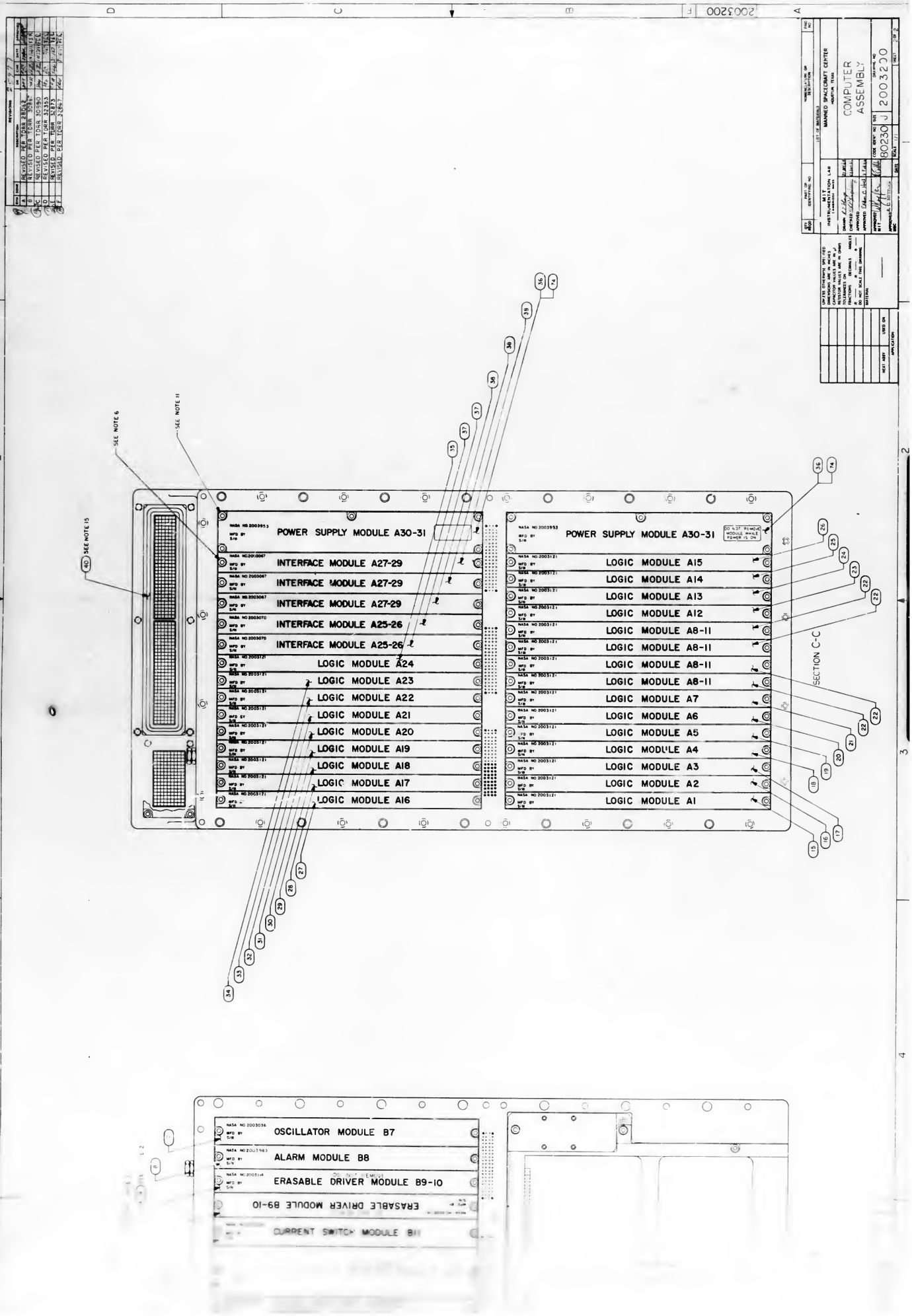
COMPUTER ASSEMBLY
MANNED SPACECRAFT CENTER
M.I.T. INSTRUMENTATION LAB
80230 J 2003200
SEE NOTE 6
SEE NOTE 11
SEE NOTE 15
POWER SUPPLY MODULE A30-31
INTERFACE MODULE A27-29
INTERFACE MODULE A27-29
INTERFACE MODULE A27-29
INTERFACE MODULE A25-26
INTERFACE MODULE A25-26
LOGIC MODULE A24
LOGIC MODULE A23
LOGIC MODULE A22
LOGIC MODULE A21
LOGIC MODULE A20
LOGIC MODULE A19
LOGIC MODULE A18
LOGIC MODULE A17
LOGIC MODULE A16
POWER SUPPLY MODULE A30-31
LOGIC MODULE A15
LOGIC MODULE A14
LOGIC MODULE A13
LOGIC MODULE A12
LOGIC MODULE A8-11
LOGIC MODULE A8-11
LOGIC MODULE A8-11
LOGIC MODULE A8-11
LOGIC MODULE A7
LOGIC MODULE A6
LOGIC MODULE A5
LOGIC MODULE A4
LOGIC MODULE A3
LOGIC MODULE A2
LOGIC MODULE A1
SECTION C-C
OSCILLATOR MODULE B7
ALARM MODULE B8
ERASABLE DRIVER MODULE B9-10
ERASABLE DRIVER MODULE B9-10
CURRENT SWITCH MODULE B11

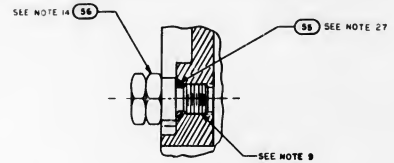

PARTIAL SECTION F F
SCALE: 2/1

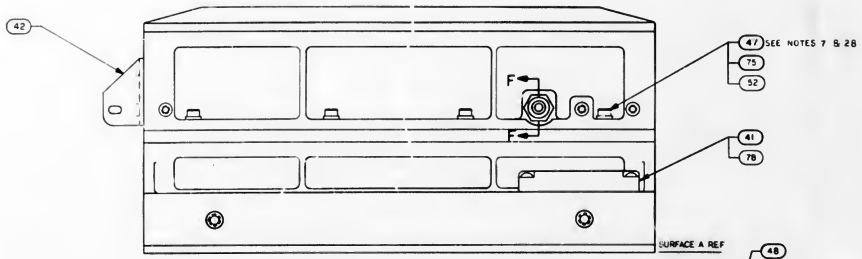

VIEW B-B

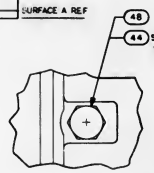

VIEW E-E

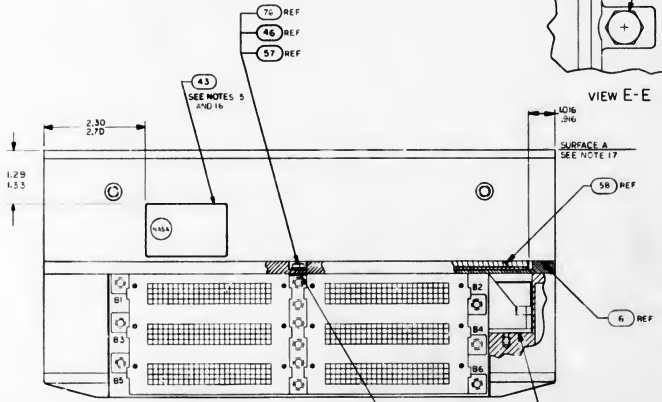

VIEW A-A

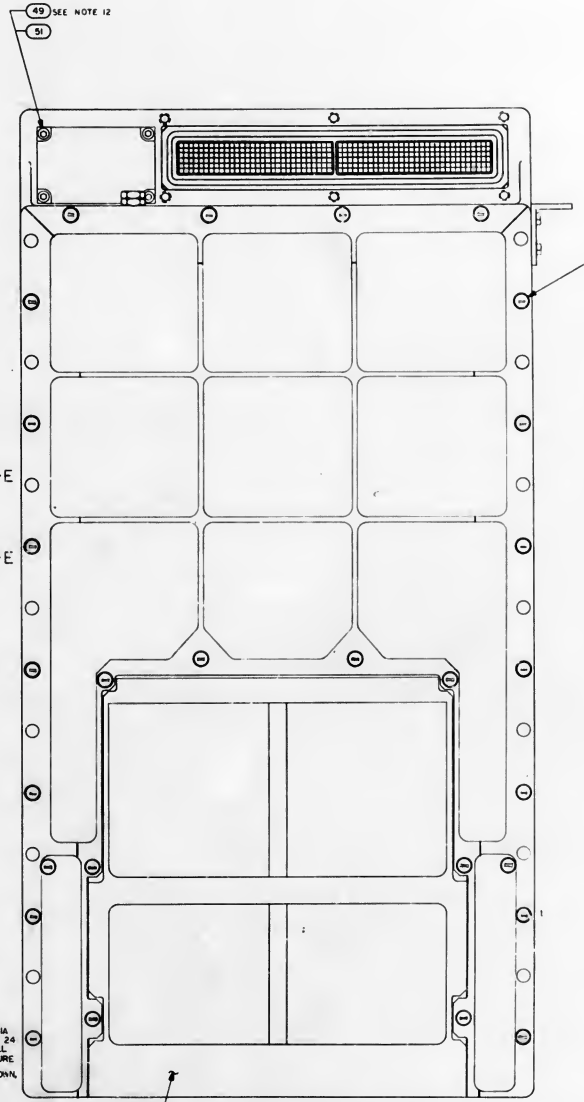

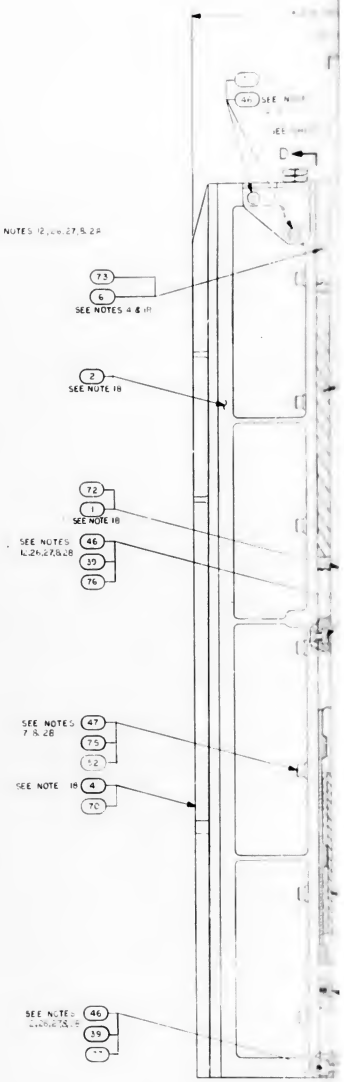

NOTES:

1. INTERPRET DRAWING IN ACCORDANCE WITH STANDARDS PRESCRIBED BY MIL-D-70327
2. PHANTOM LINES DENOTE AGC COLDPLATE AND HANDLING FIXTURE TO BE SUPPLIED BY NORTH AMERICAN AVIATION, INC
3. ADD SILICONE COMPOUND 1006879 TO MODULE MATING METAL SURFACES AND TRAY MATING SURFACES
4. ASSEMBLE FIND NO.53 AND FIND NO.63 TO FIND NO.6 AND FIND NO.6 TO FIND NO.2 PRIOR TO ASSEMBLY OF FIND NO.2 TO FIND NO.1 OR FIND NO.72
5. BOND FIND NO.43 TO FIND NO.1 OR FIND NO. 72 PER ND1002004 TYPE IV
6. UNLESS OTHERWISE SPECIFIED TORQUE ALL MODULE MOUNTING SCREWS 15/19 INCH POUNDS
7. TORQUE FIND NO.47 OR FIND NO.75 TO 28/32 INCH POUNDS
8. FINISH IS REQUIRED TO SATISFY ICD GAEL 510-10001
9. APPLY SEALING COMPOUND MIL-S-22473 GRADE H TO FIND NO.53, FIND NO.56 AND FIND NO. 44
10. COMPLETED ASSEMBLY SHALL BE TESTED IN ACCORDANCE WITH AND SHALL MEET ALL THE REQUIREMENTS OF PS2016005
11. TORQUE FOR FIND NO. 36 MOUNTING SCREWS TO BE 4/6 INCH POUNDS
12. TORQUE FOR FIND NO. 46, 49, 50, 76 AND 68 TO BE 18/22 INCH POUNDS
13. TORQUE FOR FIND NO.53 TO BE 4/6 INCH POUNDS
14. TORQUE FOR FIND NO. 44 AND FIND NO. 56 TO BE 137/157 INCH POUNDS
15. FIND NO.40 SHALL BE SUPPLIED AS PART OF THIS ASSEMBLY
16. MARK COMPUTER ASSEMBLY AND RELATED PART NO., APPLICABLE DASH NO., SERIAL NO. AND CONTRACT NO. PER 1004250 AND SERIALIZE PER ND1002023
17. FINISH SURFACE [A] PER ICD NAA MH01-01302-116 THIS ASSEMBLY MUST BE CAPABLE OF MEETING ELECTRICAL BONDING REQUIREMENTS OF ICD NAA MH01-01302-116
18. THE FOLLOWING RESISTANCES TO BE NOT MORE THAN 20 MILLIOHMS:
    a. RESISTANCE BETWEEN FIND NO.1 AND FIND NO.6
    b. RESISTANCE BETWEEN FIND NO.2 AND FIND NO.5
    c. RESISTANCE BETWEEN FIND NO.3 AND FIND NO.4 OR BETWEEN FIND NO.69 AND FIND NO.70
19. LEAK TEST: PURGE AND FILL WITH 30±10 PSIA DRY NITROGEN. STORE AT ROOM AMBIENT FOR 24 ±5 HOURS. TEST PRESSURE FOR ΔP< 0.5 PSIA. ALL MEASUREMENTS MADE AT STANDARD TEMPERATURE ±2°C FOLLOWING TEST BLEED TO 17±1.0 PSIA
20. BOND FIND NO.58 TO FIND NO.6 IN POSITION SHOWN USING 1006336
21. REFERENCED MODULES MUST NOT BE REPLACED OR INTERCHANGED WITHOUT REPEATING NOMINAL SELECTION PROCEDURE PER NOTE 10
22. THE VALUE OF C1 TO BE DETERMINED AT ELECTRICAL TEST AND SELECTED FROM APPROPRIATE CHART
23. WHEN THE VALUE OF C1 IS "0" NO COMPONENT SHALL BE USED
24. ENCAPSULATE AREA SHOWN AFTER SELECTION AND INSTALLATION OF C1 USING ND1002009 METHOD C OR D USING PRIMER PER SCD 1012513
25. WELD PER ND1002005
26. ASSEMBLE HARDWARE WITH SMOOTH FACE OF FIND NO.39 IN CONTACT WITH SCREW HEAD
27. FIND NO.39, 48, 55 & 57 TO BE DISCARDED AND REPLACED WITH NEW PARTS EACH TIME THEY ARE DISASSEMBLED
28. SEAL EXPOSED HARDWARE ASSEMBLIES WITH .002 MIN. THICK COATING OF FIND NO.66, OVERALL COMPUTER ASSEMBLY DIMENSIONS SHALL NOT BE EXCEEDED
29. KEEP ALL MATING THREADS OF SCREWS, TRAY AND MID-SPACER INSERTS FREE OF SILICONE COMPOUND

2003200 | 3

[redacted]

REVISIONS						
REV	ZONE	DESCRIPTION	DR	CHK	DATE	APPROVED
A		REVISED PER TDRR 28062				
B		REVISED PER TDRR 286				
C		REVISED PER TDRR 1 90				
D		REVISED PER TDRR 32553				
E		REVISED PER TDRR 325				
F		REVISED PER TDRR				
G		REVISED PER TDRR 33423				

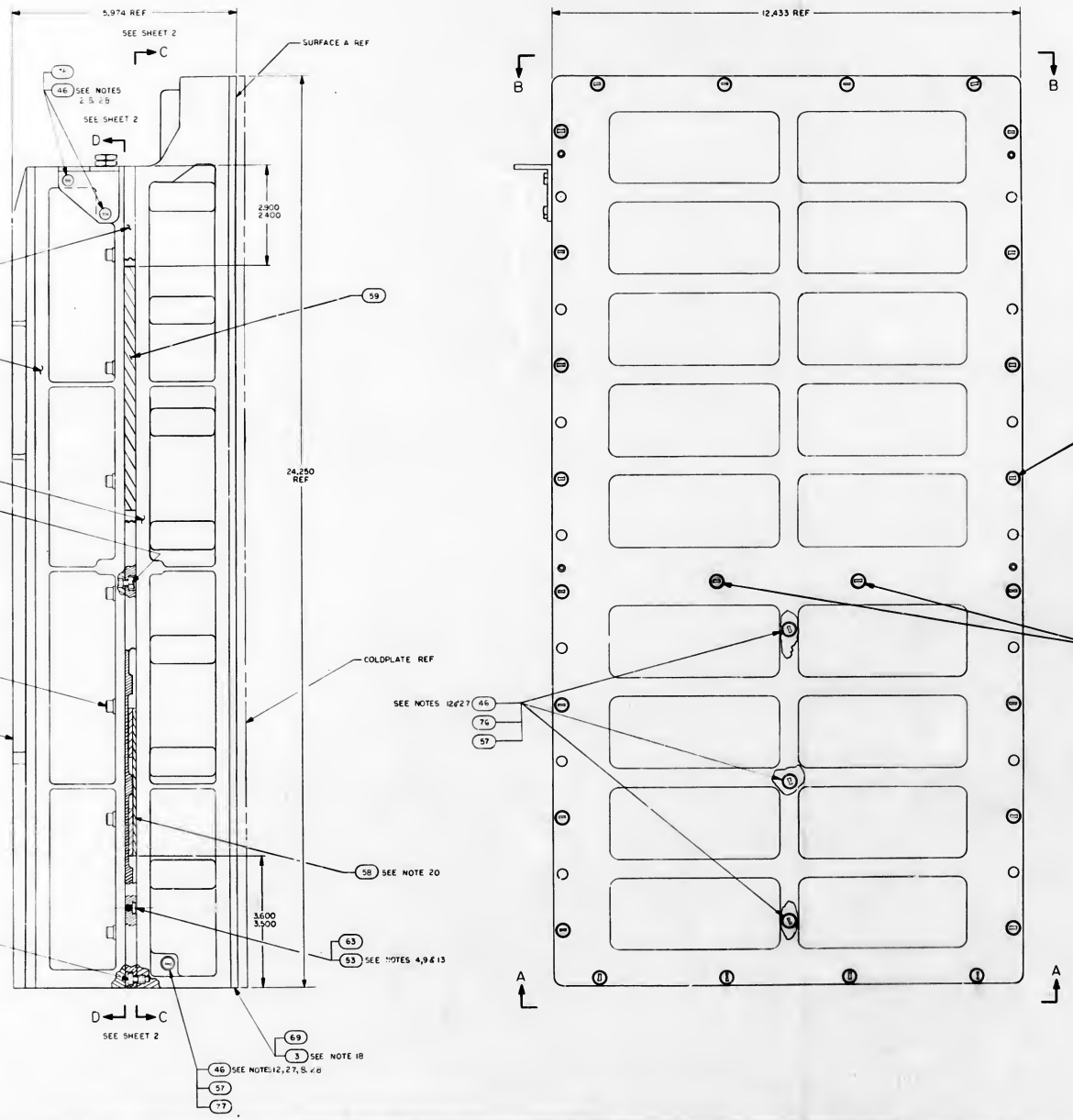

QTY REQ	QTY REQ	QTY REQ	QTY REQ	PART OR IDENTIFYING NO	NOMENCLATURE OR DESCRIPTION	FIND NO
				2005943	AGC WIRE LIST	
1	—	—	—	2003095-011	COVER, TEST CONN	78
33	33	33	—	2004732-002	SCREW, COATED	75
33	33	33	—	2004732-001	SCREW, COATED	75
13	18	18	—	2004732-003	SCREW, COATED	75
2	2	—	—	2003953-021	POWER SUPPLY MOD A30-31	74
1	1	1	—	2003978-001	MID-SPACER	73
1	1	1	—	2003092-021	TRAY A WIRE ASSY	72
2	2	2	—	2003140-021	ROPE DRIVER MODULE B16-B17	71
1	1	1	—	2003976-011	TRAY B COVER	70
1	1	1	—	2003977-011	TRAY A COVER	69
2	2	2	—	1001489-36	SCREW, HEX SOCKET HEAD	68
66	66	66	—	1006733-36	SCREW, BUTTON HEAD, HEX SOCKET	67
AR	AR	AR	AR	1006338-000	SEALING COMPOUND, SILICONE RUBBER	66
AR	AR	AR	AR	1006776-22	INSULATION, SLEEVING, ELECTRICAL	65
—	—	—	><	2005036	AGC WIRE LIST	REF
1	1	1	1	SEE NOTE 22	CAPACITOR	64
10	10	10	10	2004148-007	WASHER, FLAT	63
1	1	1	1	2003981-011	SENSE AMPLIFIER MODULE, FIXED MEMORY B14	62
AR	AR	AR	AR	2004895-002	SHIM AGC	61
AR	AR	AR	AR	2004895-001	SHIM AGC	60
1	1	1	1	2004899-001	PAD VIBRATION	59
1	1	1	1	2003970	VIBRATION PAD ASSY	58
4	4	4	4	NAS1598-D08N	WASHER, SEALING	57
1	1	1	1	2018773	VALVE PRESSURE ASSEMBLY	56
1	1	1	1	1000159-5	PACKING, PREFORMED "O" RING	55
2	2	2	2	2004984-001	WASHER, FLAT	54
8	8	8	8	2004136	PAD, THREADED	53
18	18	18	18	2004894-014	WASHER, FLAT	52
—	4	4	4	2004894-012	WASHER, FLAT	51
—	—	—	2	1001489-34	SCREW, HEX SOCKET HEAD	50
—	—	4	4	1004722-2	SCREW, CAPTIVE	49
1	1	1	1	1000159-7	PACKING, PREFORMED "O" RING	48
18	18	18	18	MS16996-14	SCREW, SOCKET HEAD, CAP	47
—	—	—	66	1006783-25	SCREW, BUTTON HEAD, HEX SOCKET	46
2	2	2	2	1006347	GASKET, PLATE	45
1	1	1	1	2004986	PLUG, MACHINE THREAD	44
1	1	1	1	1004260-19	NAME PLATE, TYPE I	43
1	1	1	1	2004113-001	BRACKET, CABLE	42
—	1	1	1	2004115	COVER, POTTED	41
1	1	1	1	1006380	GASKET, RETAINED	40
58	58	58	58	2004707	WASHER, KNURLED	39
3	3	3	3	2003067-031	INTERFACE MODULE A27-29	38
2	2	2	2	2003070-021	INTERFACE MODULE A25-26	37
—	—	2	2	2003953-011	POWER SUPPLY MODULE A30-31	36
1	1	1	1	2003121-231	LOGIC MODULE A24	35
1	1	1	1	2003121-221	LOGIC MODULE A23	34
1	1	1	1	2003121-211	LOGIC MODULE A22	33
1	1	1	1	2003121-191	LOGIC MODULE A21	32
1	1	1	1	2003121-181	LOGIC MODULE A20	31
1	1	1	1	2003121-171	LOGIC MODULE A19	30
1	1	1	1	2003121-161	LOGIC MODULE A18	29
1	1	1	1	2003121-151	LOGIC MODULE A17	28
1	1	1	1	2003121-141	LOGIC MODULE A16	27
1	1	1	1	2003121-131	LOGIC MODULE A15	26
1	1	1	1	2003121-121	LOGIC MODULE A14	25
1	1	1	1	2003121-111	LOGIC MODULE A13	24
1	1	1	1	2003121-091	LOGIC MODULE A12	23
4	4	4	4	2003121-081	LOGIC MODULE AB-11	22
1	1	1	1	2003121-071	LOGIC MODULE A7	21
1	1	1	1	2003121-061	LOGIC MODULE A6	20
1	1	1	1	2003121-051	LOGIC MODULE A5	19
1	1	1	1	2003121-041	LOGIC MODULE A4	18
1	1	1	1	2003121-031	LOGIC MODULE A3	17
1	1	1	1	2003121-021	LOGIC MODULE A2	16
1	1	1	1	2003121-011	LOGIC MODULE A1	15
—	—	—	2	2003140-011	ROPE DRIVER MODULE B16-17	14
1	1	1	1	2003027-021	STRAND SELECT MODULE B15	13
1	1	1	1	2003982-011	SENSE AMPL MOD, ERASABLE MEMORY B13	12
1	1	1	1	2003111-011	ERASABLE MEMORY MODULE B12	11
1	1	1	1	2003026-021	CURRENT SWITCH MODULE B11	10
2	2	2	2	2003114-011	ERASABLE DRIVER MODULE B9-10	9
1	1	1	1	2003983-011	ALARM MODULE B8	8
1	1	1	1	2003036-021	OSCILLATOR MODULE B7	7
—	—	—	1	2003978-000	MID SPACER	6
1	1	1	1	2003059-021	INTERCONNECTION HEADER ASSEMBLY	5
—	—	—	1	2003976-000	TRAY B COVER	4
—	—	—	1	2003977-000	TRAY A COVER	3
1	1	1	1	2003093-011	TRAY B WIRED ASSEMBLY	2
—	—	—	1	2003092-011	TRAY A WIRED ASSEMBLY	1

LIST OF MATERIALS

UNLESS OTHERWISE SPECIFIED DIMENSIONS ARE IN INCHES CAPACITOR VALUES ARE IN μf RESISTOR VALUES ARE IN OHMS TOLERANCES ON FRACTIONS DECIMALS ANG ± — ± — ± — DO NOT SCALE THIS DRAWING MATERIAL —

MIT INSTRUMENTATION LAB CAMBRIDGE MASS

DRAWN — CHECKED — APPROVED — APPROVED — APPROVED MIT — APPROVED NASA

MANNED SPACECRAFT CENTER HOUSTON, TEXAS

COMPUTER ASSEMBLY

2003991 NEXT ASSY USED ON APPLICATION

CODE IDENT NO 80230 SIZE J DRAWING NO 2003200 SCALE 1/1 SHEET 1 OF 2

CI	
PART NO.	VALUE UUF
1006777-1	10
-15	150
-16	330
-20	470
-22	680
-23	820
SEE NOTE 23	0

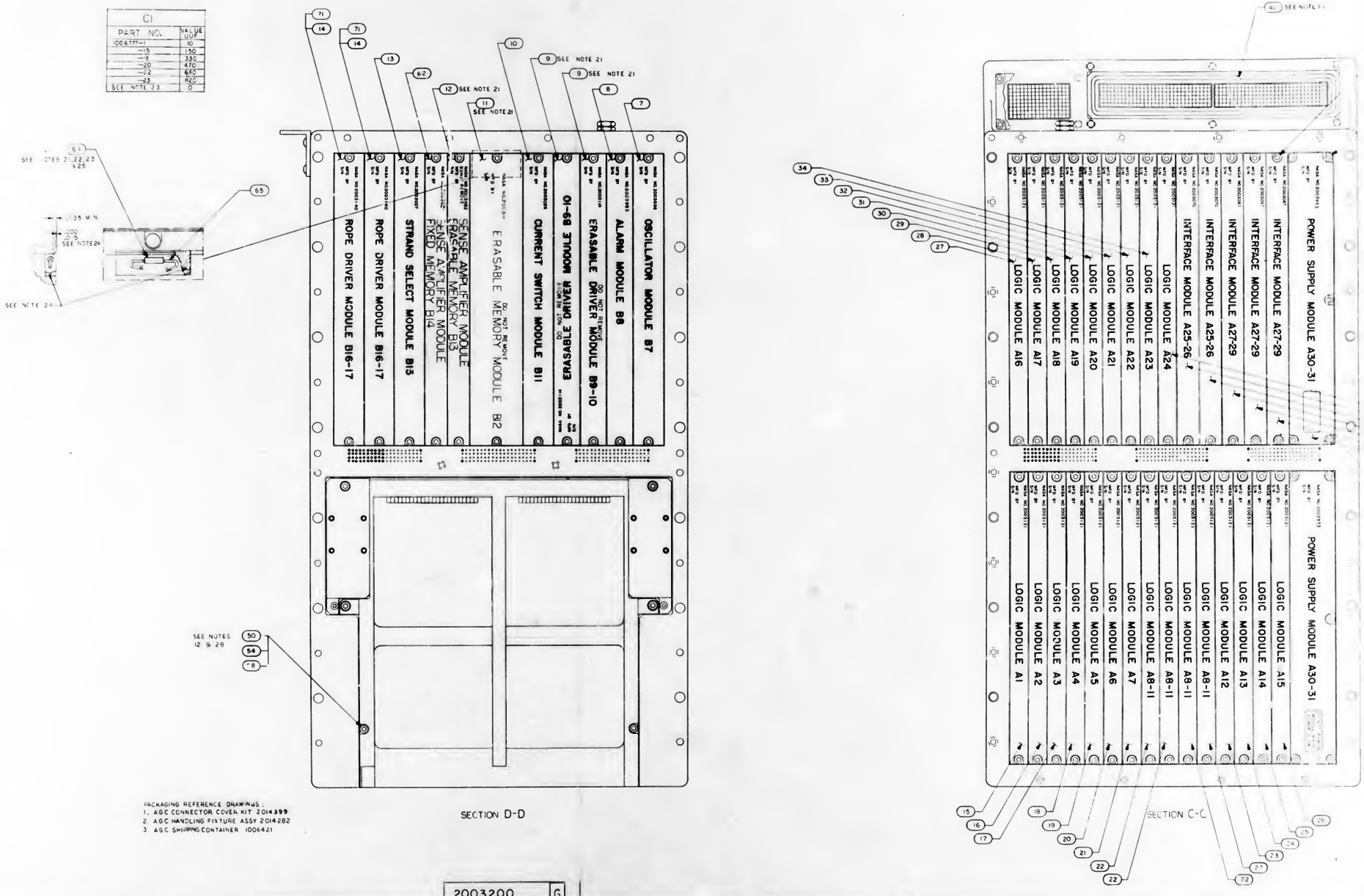

PACKAGING REFERENCE DRAWINGS:
1. AGC CONNECTOR COVER KIT 2014399
2. AGC HANDLING FIXTURE ASSY 2014282
3. AGC SHIPPING CONTAINER 1006421

2003200 G

REVISIONS					
SYM	ZONE	DESCRIPTION	DR	CHK	DATE	APPROVED
A		REVISED PER TDRR 28062				
B		REVISED PER TDRR 30987				
C		REVISED PER TDRR 30890				
D		REVISED PER TDRR 32353				
E		REVISED PER TDRR 32873				
F		REVISED PER TDRR 32867				
G		REVISED PER TDRR 33439				

QTY REQD	PART OR IDENTIFYING NO	NOMENCLATURE OR DESCRIPTION	FIND NO
		LIST OF MATERIALS	

UNLESS OTHERWISE SPECIFIED DIMENSIONS ARE IN INCHES
CAPACITOR VALUES ARE IN μf
RESISTOR VALUES ARE IN OHMS
TOLERANCES ON:
FRACTIONS ± DECIMALS ± ANGLES ±
DO NOT SCALE THIS DRAWING
MATERIAL

MIT INSTRUMENTATION LAB CAMBRIDGE MASS

MANNED SPACECRAFT CENTER HOUSTON TEXAS

COMPUTER ASSEMBLY

CODE IDENT NO 80230 | SIZE J | DRAWING NO 2003200

SCALE 1/1 | SHEET 2 OF 2

NEXT ASSY | USED ON | APPLICATION

2003200

C1	
PART NO.	VALUE UUF
1006777-1	10
-15	150
-18	330
-20	470
-22	680
-23	820
SEE NOTE 23	0

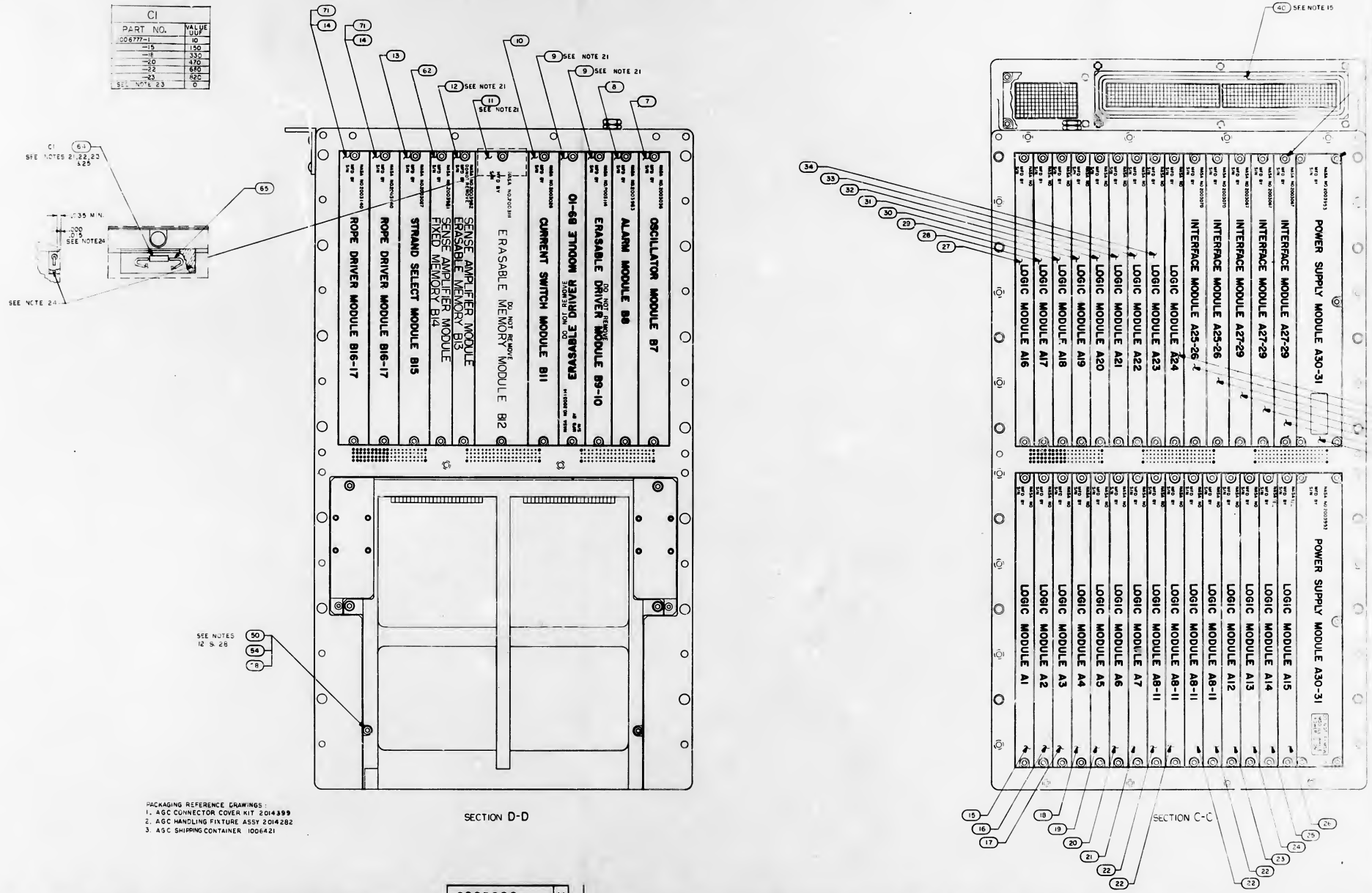

PACKAGING REFERENCE DRAWINGS:
1. AGC CONNECTOR COVER KIT 2014399
2. AGC HANDLING FIXTURE ASSY 2014282
3. AGC SHIPPING CONTAINER 1006421

2003200 H

CHART "A" (SEE NOTE 30)			
PART NO.	PART NO.	MODULE	
2003121-011	2003888-011	LOGIC MODULE	A1
-021	-021		A2
-031	-031		A3
-041	-041		A4
-051	-051		A5
-061	-061		A6
-071	-071		A7
-081	-081		A8-A11
-091	-091		A12
-111	-111		A13
-121	-121		A14
-131	-131		A15
-141	-141		A16
-151	-151		A17
-161	-161		A18
-171	-171		A19
-191	-191		A20
-211	-211		A21
-221	-221		A22
-231	-231		A23
2003121-013	2003888-013	LOGIC MODULE	A24

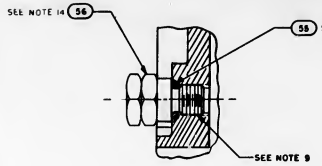

PARTIAL SECTION F F
SCALE: 2/1

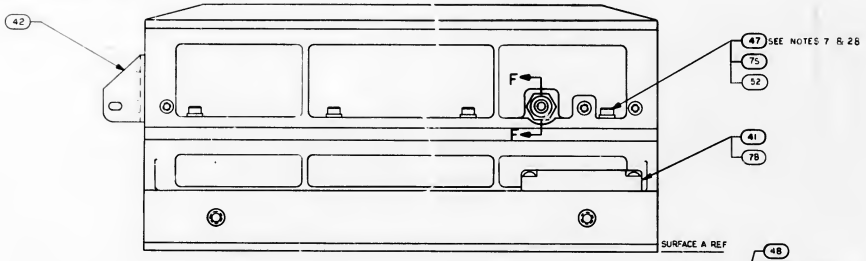

VIEW B-B

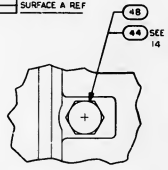

VIEW E-E

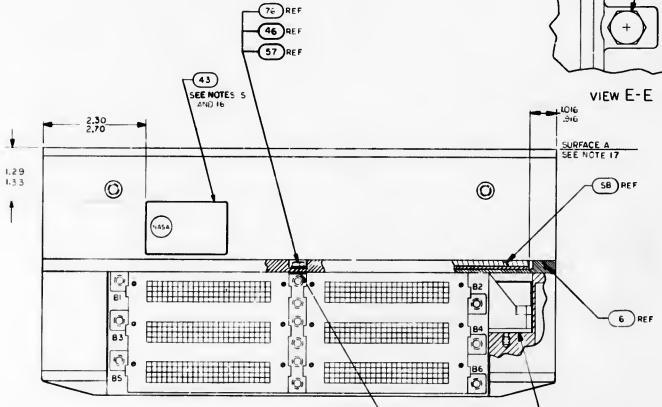

VIEW A-A

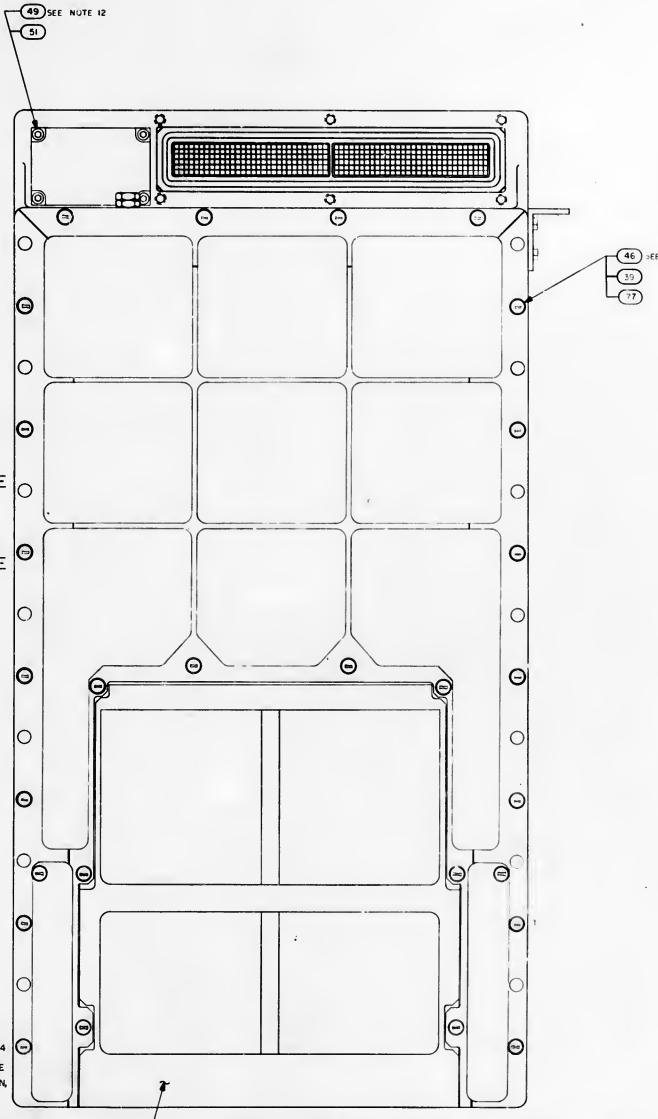

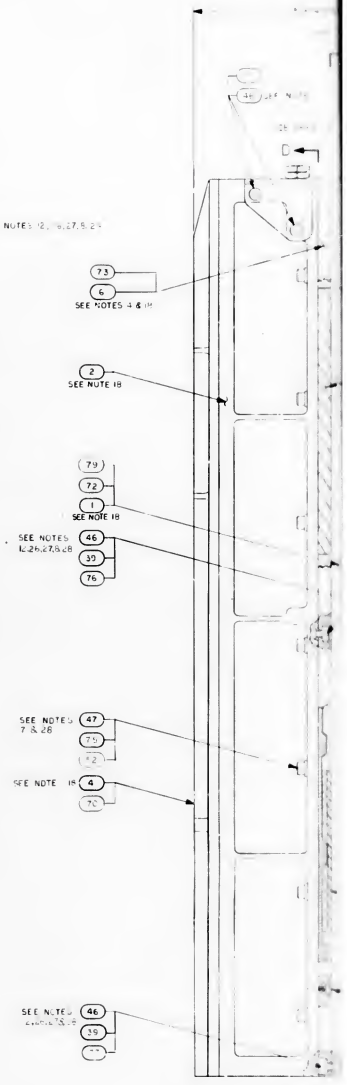

NOTES:

1. INTERPRET DRAWING IN ACCORDANCE WITH STANDARDS PRESCRIBED BY MIL-D-70327
2. PHANTOM LINES DENOTE AGC COLDPLATE AND HANDLING FIXTURE TO BE SUPPLIED BY NORTH AMERICAN AVIATION, INC
3. AVOID SILICONE CONTAMINATION ND06879 TO MODULE MATING METAL SURFACES AND TRAY MATING SURFACES
4. ASSEMBLE FIND NO.53 AND FIND NO.63 TO FIND NO.6 AND FIND NO.6 TO FIND NO.2 PRIOR TO ASSEMBLY OF FIND NO.2 TO FIND NO.1 OR FIND NO.72
5. BOND FIND NO.43 TO FIND NO.1 OR FIND NO. 72 OR FIND NO.79 PER ND1002004 TYPE IIC
6. UNLESS OTHERWISE SPECIFIED TORQUE ALL MODULE MOUNTING SCREWS 15/19 INCH POUNDS
7. TORQUE FIND NO.47 OR FIND NO.75 TO 29/32 INCH POUNDS
8. FINISH IS REQUIRED TO SATISFY ICD GAEL 510-10001
9. APPLY SEALING COMPOUND MIL-S-22473 GRADE H TO FIND NO.53, FIND NO.56 AND FIND NO. 44
10. COMPLETED ASSEMBLY SHALL BE TESTED IN ACCORDANCE WITH AND SHALL MEET ALL THE REQUIREMENTS OF PS2016005 OR PS2016007
11. TORQUE FOR FIND NO. 36 MOUNTING SCREWS TO BE 4/6 INCH POUNDS
12. TORQUE FOR FIND NO. 46, 49, 50, 76 AND 68 TO BE 18/22 INCH POUNDS
13. TORQUE FOR FIND NO.53 TO BE 4/6 INCH POUNDS
14. TORQUE FOR FIND NO. 44 AND FIND NO.56 TO BE 137/157 INCH POUNDS
15. FIND NO.40 SHALL BE SUPPLIED AS PART OF THIS ASSEMBLY
16. MARK COMPUTER ASSEMBLY AND RELATED PART NO., APPLICABLE DASH NO., SERIAL NO. AND CONTRACT NO. PER 1004260 AND SERIALIZE PER ND1002023
17. FINISH SURFACE "A" PER ICD NAA 67H01-01302-116 THIS ASSEMBLY MUST BE CAPABLE OF MEETING ELECTRICAL BONDING REQUIREMENTS OF ICD NAA MH01-01302-116
18. THE FOLLOWING RESISTANCES TO BE NOT MORE THAN 20 MILLIOHMS:
    a. RESISTANCE BETWEEN FIND NO.1 AND FIND NO.6
    b. RESISTANCE BETWEEN FIND NO.2 AND FIND NO.5
    c. RESISTANCE BETWEEN FIND NO.3 AND FIND NO.4 OR BETWEEN FIND NO.69 AND FIND NO.70
19. LEAK TEST: PURGE AND FILL WITH 30±10 PSIA DRY NITROGEN. STORE AT ROOM AMBIENT FOR 24 ±5 HOURS. TEST PRESSURE FOR ΔP< 0.5 PSIA. ALL MEASUREMENTS MADE AT STANDARD TEMPERATURE ±2°C. FOLLOWING TEST BLEED TO 17±1.0 PSIA
20. BOND FIND NO.58 TO FIND NO.6 IN POSITION SHOWN, USING 1006338
21. REFERENCED MODULES MUST NOT BE REPLACED OR INTERCHANGED WITHOUT REPEATING NOMINAL SELECTION PROCEDURE PER NOTE 10
22. THE VALUE OF C1 TO BE DETERMINED AT ELECTRICAL TEST AND SELECTED FROM APPROPRIATE CHART
23. WHEN THE VALUE OF C1 IS "0" NO COMPONENT SHALL BE USED
24. ENCAPSULATE AREA SHOWN AFTER SELECTION AND INSTALLATION OF C1 USING ND1002009 METHOD C OR D USING PRIMER PER SCD 1012513
25. WELD PER ND1002005
26. ASSEMBLE HARDWARE WITH SMOOTH FACE OF FIND NO.39 IN CONTACT WITH SCREW HEAD
27. FIND NO.39, 48, 55 & 57 TO BE DISCARDED AND REPLACED WITH NEW PARTS EACH TIME THEY ARE DISASSEMBLED
28. SEAL EXPOSED HARDWARE ASSEMBLIES WITH .002 MIN. THICK COATING OF FIND NO.66, OVERALL COMPUTER ASSEMBLY DIMENSIONS SHALL NOT BE EXCEEDED
29. KEEP ALL MATING THREADS OF SCREWS, TRAY AND MID-SPACER INSERTS FREE OF SILICONE COMPOUND
30. FOR FIND NO. 15 THRU 35 LOGIC MODULES A1 THRU A24 USE PART NO. 2003121-011 THRU 2003121-231 AND/OR 2003888-011 THRU 2003888-231 SEE CHART A
31. FOR TRAY "A" WIRED ASSY USE EITHER 2003092-041 OR 2003092-051 OR 2003092-061

2003200	4

REVISIONS						
SYM	ZONE	DESCRIPTION	BY	CHK	DATE	APPROVED
A		REVISED PER TDRR 28062				
B		REVISED PER TDRR 30887				
C		REVISED PER TDRR 32690				
D		REVISED PER TDRR 32353				
E		REVISED PER TDRR 32873				
F		REVISED PER TDRR 33037				
G		REVISED PER TDRR 33439				
H		REVISED PER TDRR 3426				

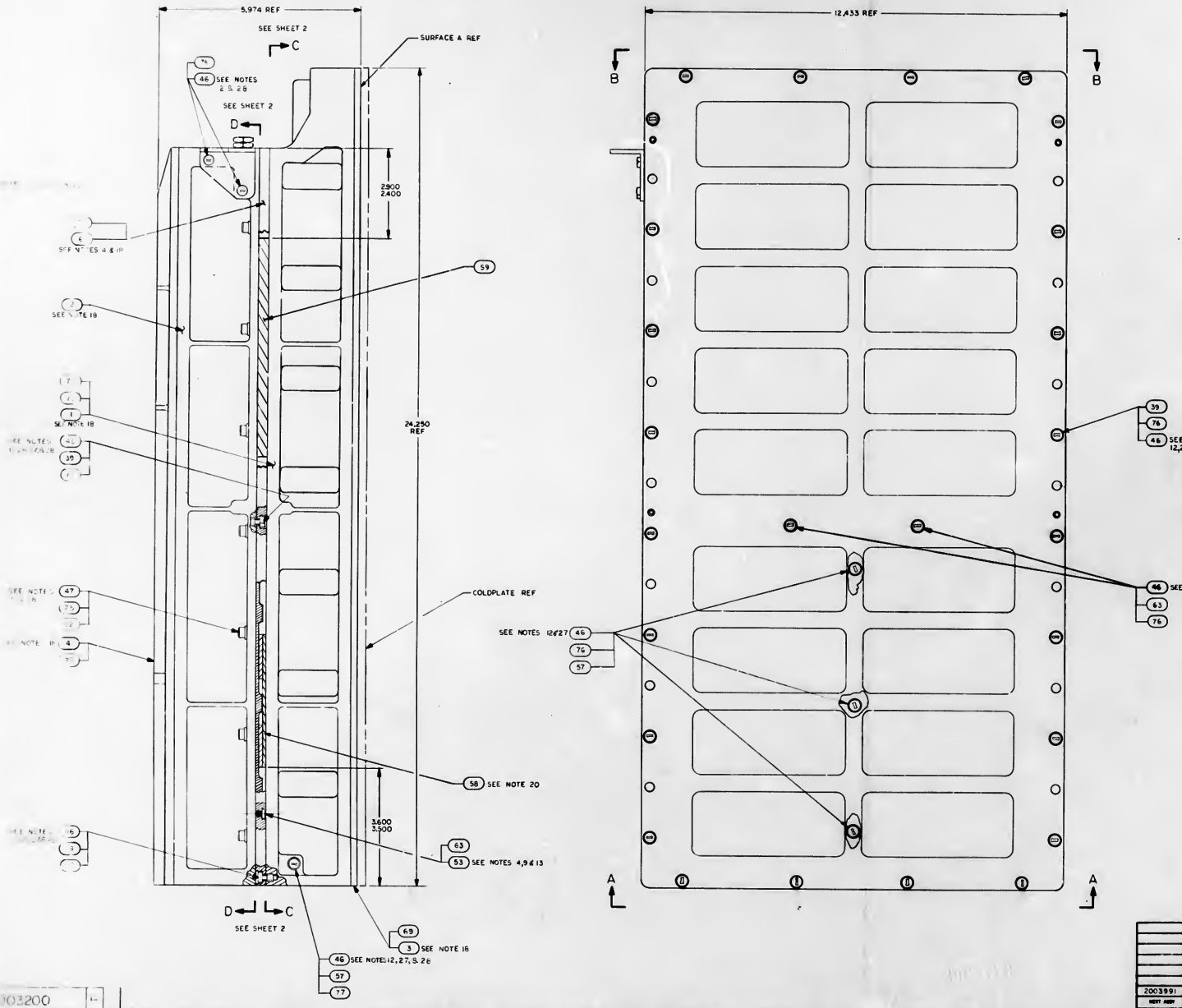

QTY REQ	QTY REQ	QTY REQ	QTY REQ	QTY REQ			REF
				—	2005943	AGC WIRE LIST	
2	—	—	—	—	2003892-011	POWER SUPPLY MOD A30-31	80
—	—	—	—	—	SEE NOTE 31	TRAY A WIRED ASSY	79
1	1	—	—	—	2003795-011	COVER, TEST COIN	78
33	33	33	83	—	2004732-002	SCREW, COATED	77
33	33	33	33	—	2004732-001	SCREW, COATED	76
18	18	18	18	—	2004732-003	SCREW, COATED	75
—	2	2	—	—	2003953-021	POWER SUPPLY MOD A30-31	74
1	1	1	1	—	2003978-001	MID-SPACER	73
—	1	1	1	—	2003092-021	TRAY A WIRE ASSY	72
2	2	2	2	—	2003140-021	ROPE DRIVER MODULE 816-817	71
1	1	1	1	—	2003976-011	TRAY B COVER	70
1	1	1	1	—	2003977-011	TRAY A COVER	69
2	2	2	2	—	1001489-36	SCREW, HEX SOCKET HEAD	68
—	88	88	88	—	1006783-26	SCREW, BUTTON HEAD, HEX SOCKET	67
AR	AR	AR	AR	AR	1006338-000	SEALING COMPOUND, SILICONE RUBBER	66
AR	AR	AR	AR	AR	1006776-62	INSULATION, SLEEVING, ELECTRICAL	65
—	—	—	—	X	2005036	AGC WIRE LIST	REF
1	1	1	1	1	SEE NOTE 22	CAPACITOR	64
10	10	10	10	10	2004148-007	WASHER, FLAT	63
1	1	1	1	1	2003981-011	SENSE AMPLIFIER MODULE, FIXED MEMORY B14	62
AR	AR	AR	AR	AR	2004895-002	SHIM AGC	61
AR	AR	AR	AR	AR	2004895-001	SHIM AGC	60
1	1	1	1	1	2004899-001	PAD VIBRATION	59
1	1	1	1	1	2003970	VIBRATION PAD ASSY	58
4	4	4	4	4	NAS1598-D08N	WASHER, SEALING	57
1	1	1	1	1	2018773	VALVE, PRESSURE ASSEMBLY	56
1	1	1	1	1	1000159-3	PACKING, PREFORMED "O" RING	55
2	2	2	2	2	2004964-001	WASHER, FLAT	54
8	8	8	8	8	2004130	PAD, THREADED	53
18	18	18	18	18	2004894-014	WASHER, FLAT	52
—	—	4	4	4	2004894-012	WASHER, FLAT	51
—	—	—	—	2	1001489-34	SCREW, HEX SOCKET HEAD	50
—	—	4	4	4	1004722-2	SCREW, CAPTIVE	49
1	1	1	1	1	1000159-7	PACKING, PREFORMED "O" RING	48
—	48	48	48	18	MS16996-14	SCREW, SOCKET HEAD, CAP	47
—	—	—	—	66	1006783-25	SCREW, BUTTON HEAD, HEX SOCKET	46
2	2	2	2	2	1006347	GASKET, PLATE	45
1	1	1	1	1	2004986	PLUG, MACHINE THREAD	44
1	1	1	1	1	1004260-19	NAME PLATE, TYPE II	43
1	1	1	1	1	2004113-001	BRACKET, CABLE	42
—	—	1	1	1	2004119	COVER, POTTED	41
1	1	1	1	1	1006380	GASKET, RETAINED	40
58	58	58	58	58	2004707	WASHER, KNURLED	39
3	3	3	3	3	2003167-031	INTERFACE MODULE A27-29	38
2	2	2	2	2	2003070-021	INTERFACE MODULE A25-26	37
—	—	—	2	2	2003953-011	POWER SUPPLY MODULE A30-31	36
1	1	1	1		SEE NOTE 30	LOGIC MODULE A24	35
1	1	1	1	1		LOGIC MODULE A23	34
1	1	1	1	1		LOGIC MODULE A22	33
1	1	1	1	1		LOGIC MODULE A21	32
1	1	1	1	1		LOGIC MODULE A20	31
1	1	1	1	1		LOGIC MODULE A19	30
1	1	1	1	1		LOGIC MODULE A18	29
1	1	1	1	1		LOGIC MODULE A17	28
1	1	1	1	1		LOGIC MODULE A16	27
1	1	1	1	1		LOGIC MODULE A15	26
1	1	1	1	1		LOGIC MODULE A14	25
1	1	1	1	1		LOGIC MODULE A13	24
1	1	1	1	1		LOGIC MODULE A12	23
4	4	4	4	4		LOGIC MODULE A8-11	22
1	1	1	1	1		LOGIC MODULE A7	21
1	1	1	1	1		LOGIC MODULE A6	20
1	1	1	1	1		LOGIC MODULE A5	19
1	1	1	1	1		LOGIC MODULE A4	18
1	1	1	1	1		LOGIC MODULE A3	17
1	1	1	1	1		LOGIC MODULE A2	16
1	1	1	1	1	SEE NOTE 30	LOGIC MODULE A1	15
—	—	—	—	2	2003140-011	ROPE DRIVER MODULE 816-17	14
1	1	1	1	1	2003027-021	STRAND SELECT MODULE B15	13
1	1	1	1	1	2003982-011	SENSE AMPL MOD, ERASABLE MEMORY B13	12
1	1	1	1	1	2003111-011	ERASABLE MEMORY MODULE B12	11
1	1	1	1	1	2003326-021	CURRENT SWITCH MODULE B11	10
2	2	2	2	2	2003114-011	ERASABLE DRIVER MODULE B9-10	9
1	1	1	1	1	2003583-011	ALARM MODULE B6	8
1	1	1	1	1	2003036-021	OSCILLATOR MODULE B7	7
—	—	—	—	1	2003978-000	MID SPACER	6
1	1	1	1	1	2003059-021	INTERCONNECTION HEADER ASSEMBLY	5
1	—	—	—	1	2003976-000	TRAY B COVER	4
—	—	—	—	1	2003977-000	TRAY A COVER	3
1	1	1	1	1	2003093-011	TRAY B WIRED ASSEMBLY	2
—	—	—	—	1	2003092-011	TRAY A WIRED ASSEMBLY	1
QTY REQ	QTY REQ	QTY REQ	QTY REQ	QTY REQ	PART OR IDENTIFYING NO	NOMENCLATURE OR DESCRIPTION	FIG NO

051-041-031-021-011

LIST OF MATERIALS

SEE NOTE 28

UNLESS OTHERWISE SPECIFIED DIMENSIONS ARE IN INCHES VISCOSITY VALUES ARE IN μ RESISTOR VALUES ARE IN OHMS TOLERANCES ON FRACTIONS ± — DECIMALS ± — ANGLES ± — DO NOT SCALE THIS DRAWING MATERIAL —	MIT INSTRUMENTATION LAB CAMBRIDGE, MASS. DRAWN CHECKED APPROVED APPROVED	MANNED SPACECRAFT CENTER HOUSTON, TEXAS	COMPUTER ASSEMBLY
2003991 NEXT ASSY USED ON APPLICATION	APP. CHANGE MIT APPROVAL SPACECRAFT	CODE IDENT NO 80230 SIZE J DRAWING NO 2003200	SCALE 1/1 SHEET 1 OF 2

2003200

REVISIONS					
SYM	ZONE	DESCRIPTION	DR	CHK	DATE	APPROVED
A		REVISED PER TDRR 28062				
B		REVISED PER TDRR 32887				
C		REVISED PER TDRR 32192				
D		REVISED PER TDRR 32353				
E		REVISED PER TDRR 32873				
F		REVISED PER TDRR 32667				
G		REVISED PER TDRR 33439				
H		REVISED PER TDRR 34261				

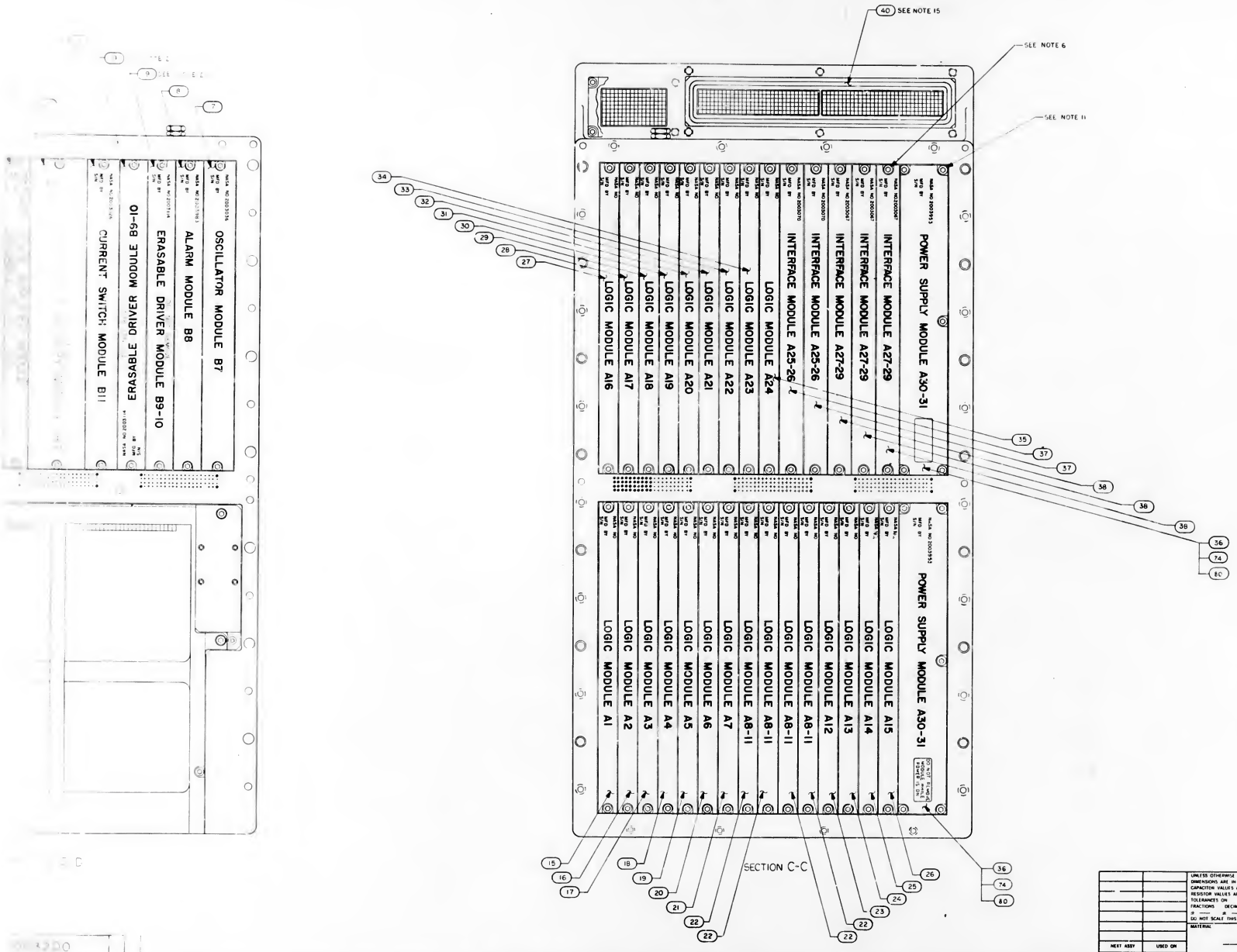

QTY REQD	PART OF IDENTIFYING NO	NOMENCLATURE OR DESCRIPTION	FIND NO
		LIST OF MATERIALS	

MIT INSTRUMENTATION LAB (CAMBRIDGE, MASS.)

MANNED SPACECRAFT CENTER HOUSTON, TEXAS

COMPUTER ASSEMBLY

UNLESS OTHERWISE SPECIFIED DIMENSIONS ARE IN INCHES CAPACITOR VALUES ARE IN μf RESISTOR VALUES ARE IN OHMS TOLERANCES ON FRACTIONS ± DECIMALS ± ANGLES ± DO NOT SCALE THIS DRAWING MATERIAL

NEXT ASSY | USED ON | APPLICATION

DRAWN | CHECKED | APPROVED | APPROVED MIT | APPROVED MSC

CODE IDENT NO 80230 | SIZE J | DRAWING NO 2003200

DATE | SCALE 1/1 | SHEET 2 OF 2

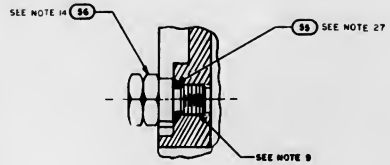

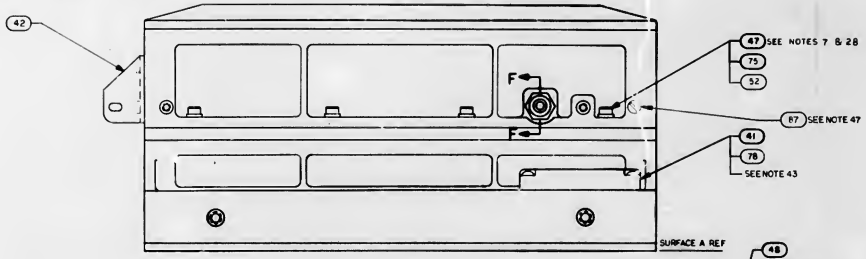

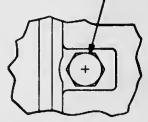

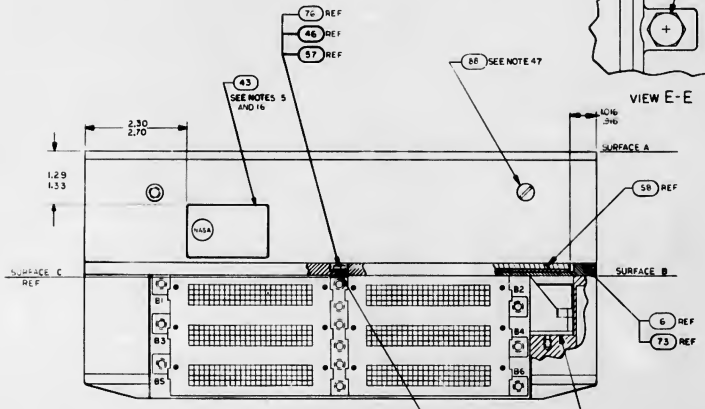

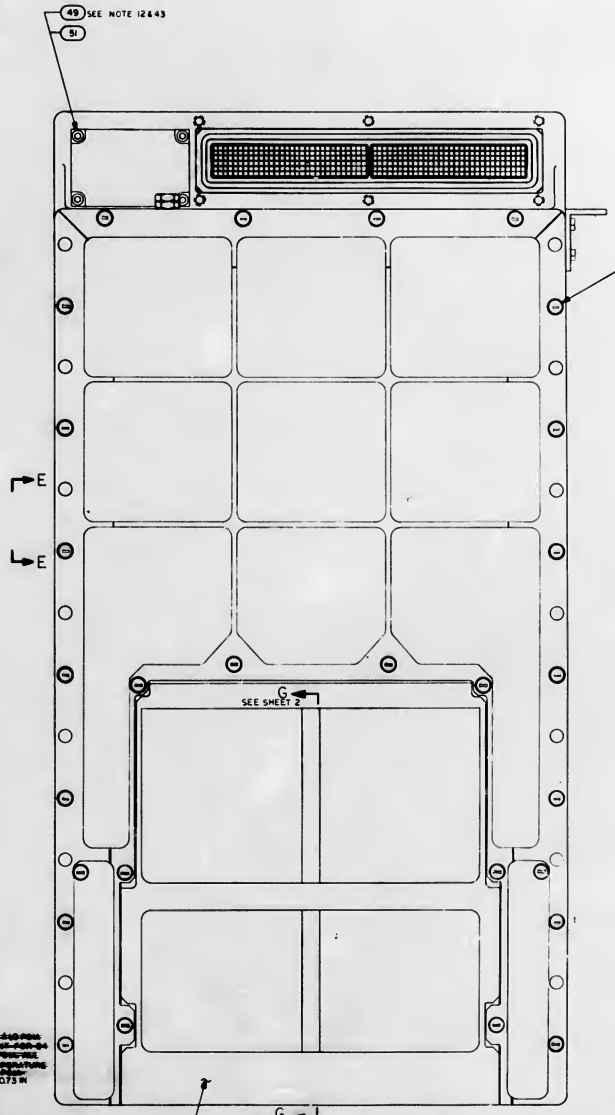

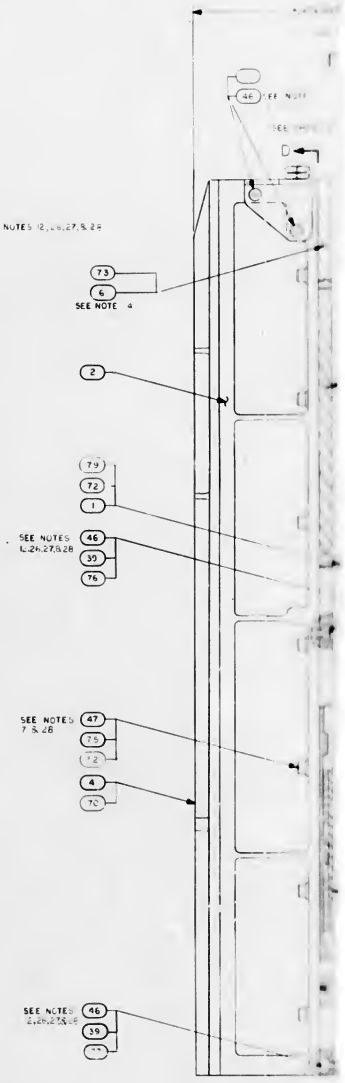

[illegible]

CHART A (SEE NOTE 30)			
PART NO.	PART NO.	MODULE	
2003121-011	2003888-011	LOGIC MODULE	A1
-021	-021		A2
-031	-031		A3
-041	-041		A4
-051	-051		A5
-061	-061		A6
-071	-071		A7
-081	-081		A8-A11
-091	-091		A12
-111	-111		A13
-121	-121		A14
-131	-131		A15
-141	-141		A16
-151	-151		A17
-161	-161		A18
-171	-171		A19
-181	-181		A20
-191	-191		A21
-211	-211		A22
-221	-221		A23
2003121-231	2003888-231	LOGIC MODULE	A24

PARTIAL SECTION F F
SCALE: 2/1

VIEW B-B

VIEW E-E

VIEW A-A

G
SEE SHEET 2

5
SEE NOTE 42

NOTES:

1. INTERPRET DRAWING IN ACCORDANCE WITH STANDARDS PRESCRIBED BY MIL-D-70327
2. PHANTOM LINES DENOTE AGC COLDPLATE AND HANDLING FIXTURE TO BE SUPPLIED BY NORTH AMERICAN AVIATION, INC.
3. ADD SILICONE COMPOUND 1006879 TO MODULE MATING METAL SURFACES AND TRAY MATING SURFACES
4. ASSEMBLE FIND NO. 53 AND FIND NO. 63 TO FIND NO. 6 OR FIND NO. 73 AND FIND NO. 6 OR FIND NO. 73 TO FIND NO. 2 PRIOR TO ASSEMBLY OF FIND NO. 2 TO FIND NO 1 OR FIND NO. 72 OR FIND NO. 79
5. BOND FIND NO. 43 TO FIND. NO. 1 OR FIND NO. 72 OR FIND NO. 79 PER ND1002219, METHOD II
6. UNLESS OTHERWISE SPECIFIED TORQUE ALL MODULE MOUNTING SCREWS 15/19 INCH POUNDS
7. TORQUE FIND NO. 47 OR FIND NO. 75 TO 28/32 INCH POUNDS
8. ~~FINISH IS [illegible]~~
9. APPLY SEALING COMPOUND MIL-S-22473 GRADE H TO FIND NO. 53, FIND NO. 56 AND FIND NO. 44
10. COMPLETED ASSEMBLY SHALL BE TESTED IN ACCORDANCE WITH AND SHALL MEET ALL THE REQUIREMENTS OF PS2016005 OR PS2016007
11. TORQUE FOR FIND NO. 36 MOUNTING SCREWS TO BE 10/12 INCH POUNDS
12. TORQUE FOR FIND NO. 46, 49, 50, 76 AND 68 TO BE 18/22 INCH POUNDS
13. TORQUE FOR FIND NO. 53 TO BE 4/6 INCH POUNDS
14. TORQUE FOR FIND NO. 44 AND FIND NO. 56 TO BE 137/157 INCH POUNDS
15. FIND NO. 40 SHALL BE SUPPLIED AS PART OF THIS ASSEMBLY
16. MARK "COMPUTER ASSEMBLY" AND RELATED PART NO., APPLICABLE DASH NO., SERIAL NO. AND CONTRACT NO. PER 1004260 AND SERIALIZE PER ND1002023
17. ~~[illegible] SURFACE [illegible] PER [illegible] TO THIS ASSEMBLY MUST BE CAPABLE OF MEETING ELECTRICAL BONDING REQUIREMENTS OF [illegible]~~
18. ~~THE FOLLOWING RESISTANCES TO BE NOT MORE THAN [illegible] MILLIOHMS:~~
    - ~~a. RESISTANCE BETWEEN FIND NO. 1 AND FIND NO. 6~~
    - ~~b. RESISTANCE BETWEEN FIND NO. 2 AND FIND NO. 6~~
    - ~~c. RESISTANCE BETWEEN FIND NO. 3 AND FIND NO. 4 OR BETWEEN FIND NO. 69 AND FIND NO. 70~~
19. ~~LEAK TEST PURGE AND FILL WITH [illegible] NITROGEN STORE AT ROOM AMBIENT FOR 24 [illegible] MEASUREMENTS MADE AT STANDARD TEMPERATURE [illegible]~~
20. BOND FIND NO. 58 TO FIND NO. 6 OR FIND NO. 73 IN POSITION SHOWN, USING 1006338
21. REFERENCED MODULES MUST NOT BE REPLACED OR INTERCHANGED WITHOUT REPEATING NOMINAL SELECTION PROCEDURE PER NOTE 10
22. THE VALUE OF C1 TO BE DETERMINED AT ELECTRICAL TEST AND SELECTED FROM APPROPRIATE CHART
23. WHEN THE VALUE OF C1 IS "D" NO COMPONENT SHALL BE USED
24. ENCAPSULATE AREA SHOWN AFTER SELECTION AND INSTALLATION OF C1 USING ND1002009 METHOD C OR D USING PRIMER PER SCD 1012513
25. WELD PER ND1002005
26. ASSEMBLE HARDWARE WITH SMOOTH FACE OF FIND NO. 39 IN CONTACT WITH SCREW HEAD
27. FIND NO. 39, 48, 55 & 57 TO BE DISCARDED AND REPLACED WITH NEW PARTS EACH TIME THEY ARE DISASSEMBLED
28. SEAL EXPOSED HARDWARE ASSEMBLIES WITH .002 MIN THICK COATING OF FIND NO. 82, OVERALL COMPUTER ASSEMBLY DIMENSIONS SHALL NOT BE EXCEEDED
29. KEEP ALL MATING THREADS OF SCREWS, TRAY AND MID-SPACER INSERTS FREE OF SILICONE COMPOUND
30. FOR FIND NO. 15 THRU 35, LOGIC MODULES A1 THRU A24 USE PART NO. 2003121-011 THRU 2003121-231 AND/OR 2003888-011 THRU 2003888-231 SEE CHART A
31. FOR TRAY "A" WIRED ASSY USE EITHER 2003092-041 OR 2003092-051 OR 2003092-061
32. FOR OSCILLATOR MODULE B7 USE EITHER 2003036-021 OR 2003036-031
33. THRU 47 SEE SHEET 2

2003200 J

REVISIONS					
SYM	ZONE	DESCRIPTION	BY	CHK	DATE	APPROVED
A		REVISED PER TDR# 28062				
B		REVISED PER TDR# 30887				
C		REVISED PER TDR# 30990				
D		REVISED PER TDR# 32353				
E		REVISED PER TDR# 32873				
F		REVISED PER TDR# 33047				
G		REVISED PER TDR# 33439				
H		REVISED PER TDR# 3426				
J		REVISED PER TDR# 34656				

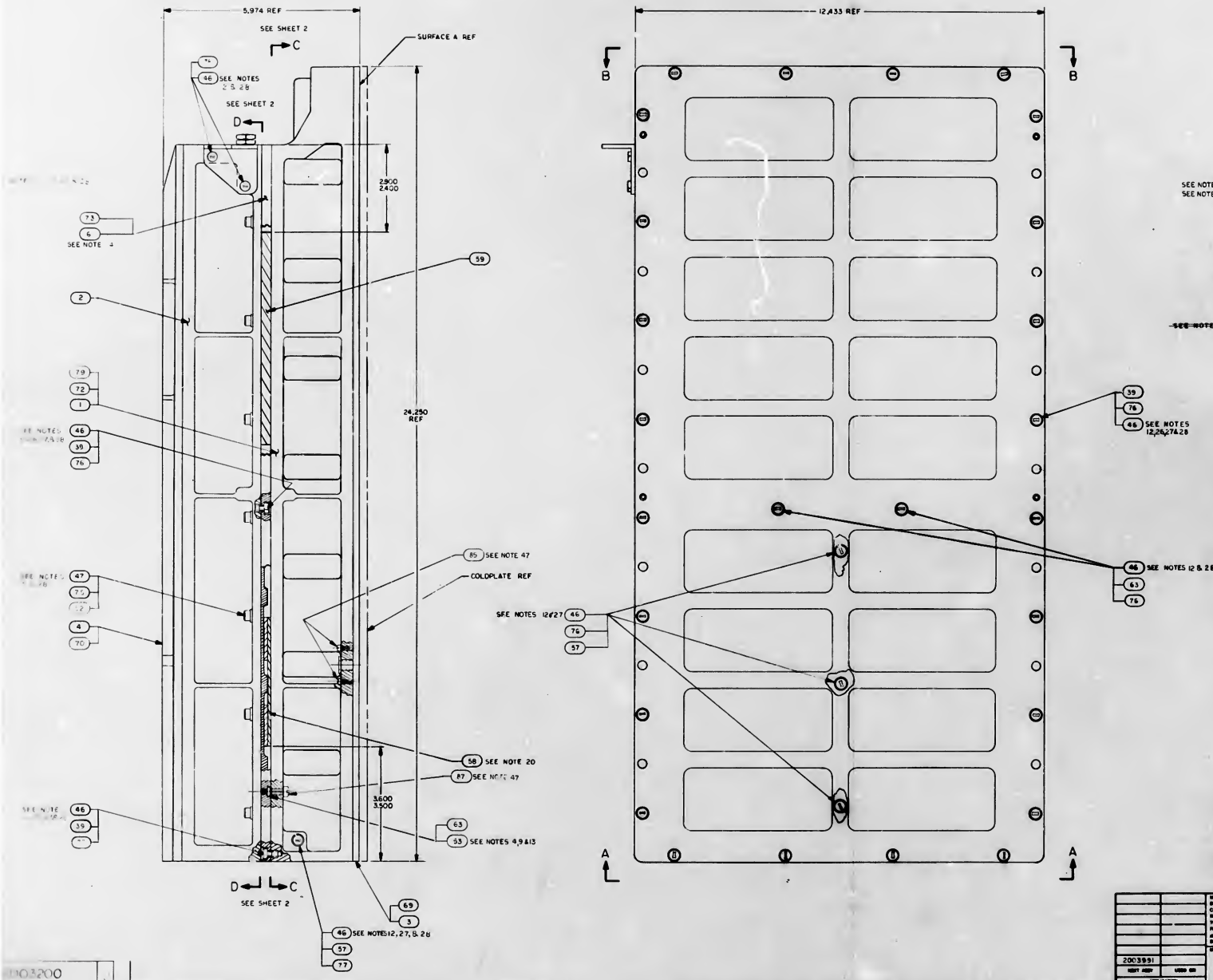

QTY REQUIRED						PART OR IDENTIFYING NO.	DESCRIPTION	FIGURE NO.
4	4	4	4	4		1010485-432	SCREW, NYLON	
11	11	11	11	11		1010485-332	SCREW, NYLON	
6	6	6	6	6		1010485-235	SCREW, NYLON	
28	28	28	28	28		1010485-100	SCREW, NYLON	
AR	AR	AR	AR	AR		2000501	SHIM AGC	
AR	AR	AR	AR	AR		2010800-000	SHIM	
AR	AR	AR	AR	AR		1006338-003	SEALING COMPOUND, SILICONE RUBBER (SEE NOTE 28)	
AR	AR	AR	AR	AR		MIL-S-8660	SILICONE COMPOUND (SEE NOTE 42)	
				—		2005843	AGC WIRE LIST	
2	—	—	—	—		2003892-011	POWER SUPPLY MOD A30-31	80
1	—	—	—	—		SEE NOTE 31	TRAY A WIRED ASSY	79
1	1	—	—	—		2003095-011	COVER, TEST CONN	78
33	33	33	33	—		2004732-002	SCREW, COATED	77
33	33	33	33	—		2004737-001	SCREW, COATED	76
18	18	18	18	—		2004732-003	SCREW, COATED	75
—	2	2	—	—		2003953-021	POWER SUPPLY MOD A30-31	74
1	1	1	1	—		2003978-001	MID-SPACER	73
—	1	1	1	—		2003092-021	TRAY A WIRE ASSY	72
2	2	2	2	—		SEE NOTE 41	ROPE DRIVER MODULE B16-B17	71
1	1	1	1	—		2003976-011	TRAY B COVER	70
1	1	1	1	—		2003977-011	TRAY A COVER	69
2	2	2	2	—		1001489-36	SCREW, HEX SOCKET HEAD	68
—	66	66	66	—		1006783-25	SCREW, BUTTON HEAD, HEX SOCKET	67
~~28~~	~~AR~~	~~AR~~	~~AR~~	~~AR~~		~~1006338-000~~	~~SEALING COMPOUND, SILICONE RUBBER~~ (SEE NOTE 28)	~~66~~
AR	AR	AR	AR	AR		1006776-22	INSULATION, SLEEVING, ELECTRICAL	65
—	—	—	—			2005036	AGC WIRE LIST	REF
1	1	1	1	1		SEE NOTE 22	CAPACITOR	64
10	10	10	10	10		2004148-007	WASHER, FLAT	63
1	1	1	1	1		2003981-011	SENSE AMPLIFIER MODULE, FIXED MEMORY B14	62
~~AR~~	~~AR~~	~~AR~~	~~AR~~	~~AR~~		~~2004998-002~~	~~SHIM AGC~~	~~61~~
~~AR~~	~~AR~~	~~AR~~	~~AR~~	~~AR~~		~~2004999-001~~	~~SHIM AGC~~	~~60~~
1	1	1	1	1		2004899-001	PAD VIBRATION	59
1	1	1	1	1		2003970	VIBRATION PAD ASSY	58
4	4	4	4	4		NAS1598-008N	WASHER, SEALING	57
1	1	1	1	1		2048773	VALVE PRESSURE ASSEMBLY	56
1	1	1	1	1		1000159-5	PACKING, PREFORMED "O" RING	55
2	2	2	2	2		2001964-001	WASHER, FLAT	54
8	8	8	8	8		2004130	PAD, THREADED	53
18	18	18	18	18		2004894-014	WASHER, FLAT	52
—	—	4	4	4		2004894-012	WASHER, FLAT	51
—	—	—	—	2		1001489-34	SCREW, HEX SOCKET HEAD	50
—	—	4	4	4		1004722-2	SCREW, CAPTIVE	49
1	1	1	1	1		1000159-7	PACKING, PREFORMED "O" RING	48
—	48	48	48	18		NS16996-14	SCREW, SOCKET HEAD, CAP	47
—	—	—	—	66		1006783-25	SCREW, BUTTON HEAD, HEX SOCKET	46
2	2	2	2	2		1006347	GASKET, PLATE	45
1	1	1	1	1		2004946	PLUG, MACHINE THREAD	44
1	1	1	1	1		1004260-19	NAME PLATE, TYPE II	43
1	1	1	1	1		2004113-001	BRACKET, CABLE	42
—	—	1	1	1		2004119	COVER, POTTED	41
1	1	1	1	1		1006580	GASKET, RETAINED	40
58	58	58	58	58		2004707	WASHER, KNURLED	39
3	3	3	3	3		SEE NOTE 40	INTERFACE MODULE A27-29	38
2	2	2	2	2		SEE NOTE 39	INTERFACE MODULE A25-26	37
—	—	—	2	2		2003983-011	POWER SUPPLY MODULE A30-31	36
—	—	—	1	1		SEE NOTE 30	LOGIC MODULE A24	35
1	1	1	1	1			LOGIC MODULE A23	34
1	1	1	1	1			LOGIC MODULE A22	33
1	1	1	1	1			LOGIC MODULE A21	32
1	1	1	1	1			LOGIC MODULE A20	31
1	1	1	1	1			LOGIC MODULE A19	30
1	1	1	1	1			LOGIC MODULE A18	29
1	1	1	1	1			LOGIC MODULE A17	28
1	1	1	1	1			LOGIC MODULE A16	27
1	1	1	1	1			LOGIC MODULE A15	26
1	1	1	1	1			LOGIC MODULE A14	25
1	1	1	1	1			LOGIC MODULE A13	24
1	1	1	1	1			LOGIC MODULE A12	23
4	4	4	4	4			LOGIC MODULE A8-11	22
1	1	1	1	1			LOGIC MODULE A7	21
1	1	1	1	1			LOGIC MODULE A6	20
1	1	1	1	1			LOGIC MODULE A5	19
1	1	1	1	1			LOGIC MODULE A4	18
1	1	1	1	1			LOGIC MODULE A3	17
1	1	1	1	1			LOGIC MODULE A2	16
1	1	1	1	1		SEE NOTE 30	LOGIC MODULE A1	15
—	—	—	—	2		2003140-011	ROPE DRIVER MODULE B16-17	14
1	1	1	1	1		SEE NOTE 38	STRAND SELECT MODULE B15	13
1	1	1	1	1		SEE NOTE 37	SENSE AMPL MOD, ERASABLE MEMORY B13	12
1	1	1	1	1		SEE NOTE 36	ERASABLE MEMORY MODULE B12	11
1	1	1	1	1		SEE NOTE 35	CURRENT SWITCH MODULE B11	10
2	2	2	2	2		SEE NOTE 34	ERASABLE DRIVER MODULE B9-10	9
1	1	1	1	1		SEE NOTE 33	ALARM MODULE B8	8
1	1	1	1	1		SEE NOTE 32	OSCILLATOR MODULE B7	7
—	—	—	—	1		2003978-000	MID SPACER	6
1	1	1	1	1		2003059-021	INTERCONNECTION HEADER ASSEMBLY	5
—	—	—	—	1		2003976-000	TRAY B COVER	4
—	—	—	—	1		2003977-000	TRAY A COVER	3
—	—	—	1	1		2003093-011	TRAY B WIRED ASSEMBLY	2
—	—	—	—	1		2003092-011	TRAY A WIRED ASSEMBLY	1
QTY REQUIRED	QTY REQUIRED	QTY REQUIRED	QTY REQUIRED	QTY REQUIRED		PART OR IDENTIFYING NO.	DESCRIPTION	FIGURE NO.

2003200

LIST OF MATERIALS

UNLESS OTHERWISE SPECIFIED DIMENSIONS ARE IN INCHES
CAPACITOR VALUES ARE IN µf
RESISTOR VALUES ARE IN OHMS
TOLERANCES ON
FRACTIONS ±1/64
DECIMALS .XXX ±.5
.X ±.1
.XX ±.02
DO NOT SCALE THIS DRAWING

MATERIAL —

2003991
NEXT ASSY
USED ON
APPLICATION

SELF INSTRUMENTATION LAB
CAMBRIDGE, MASS.

MANNED SPACECRAFT CENTER
HOUSTON, TEXAS

COMPUTER ASSEMBLY

CODE IDENT NO.	SIZE	DRAWING NO.
80230	J	2003200

SCALE (2) — SHEET 1 OF 2

C1	
PART NO.	VALUE UUF
1006777-1	10
-15	150
-19	330
-20	470
-22	680
-23	820
SEE NOTE 23	0

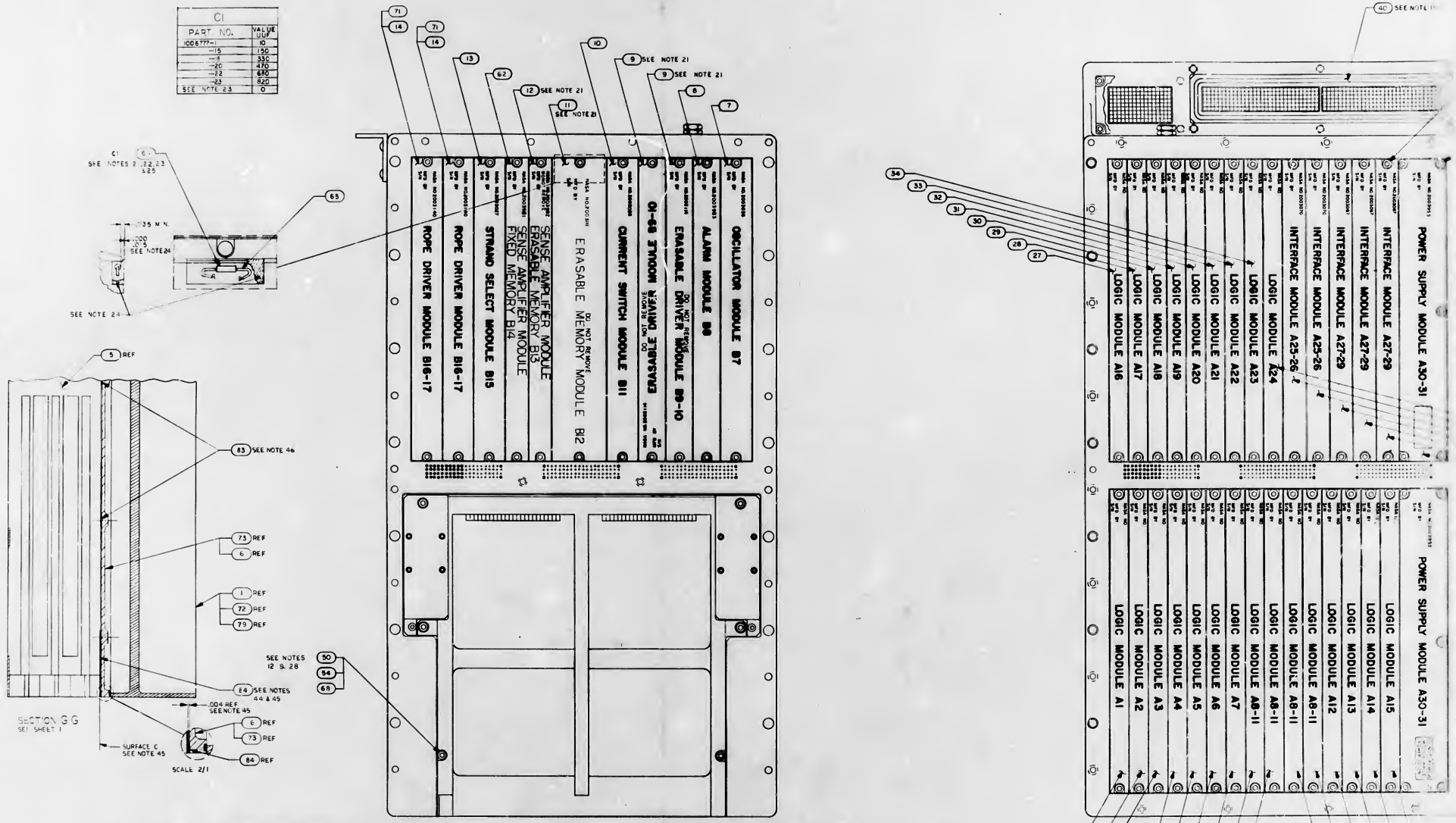

PACKAGING REFERENCE DRAWINGS.
1. AGC CONNECTOR COVER KIT 2014399
2. AGC HANDLING FIXTURE ASSY 2014282
3. AGC SHIPPING CONTAINER 1006421

33. FOR ALARM MODULE B8 USE EITHER 2003983-011 OR 2003983-021
34. FOR ERASABLE DRIVER MODULE B9-10 USE EITHER 2003114-011 OR 2003114-021
35. FOR CURRENT SWITCH MODULE B11 USE EITHER 2003026-021 OR 2003026-031
36. FOR ERASABLE MEMORY MODULE B12 USE EITHER 2003111-011 OR 2003111-021
37. FOR SENSE AMPLIFIER MODULE ERASABLE MEMORY B13 USE EITHER 2003982-011 OR 2003982-021 OR 2003982-031
38. FOR STRAND SELECT MODULE B15 USE EITHER 2003027-021 OR 2003027-031
39. FOR INTERFACE MODULE A25—26 USE EITHER 2003070-021 OR 2003070-031
40. FOR INTERFACE MODULE A27—29 USE EITHER 2003067-031 OR 2003067-041
41. FOR ROPE DRIVER MODULE B16—17 USE EITHER 2003140-021 OR 2003140-031
42. FILL FEMALE INSULATORS OF B41 AND B42 CONNECTORS USING FIND NO. 81 PRIOR TO ASSEMBLY OF FIND NOS TO FIND NO.2
43. SEAL EXPOSED HARDWARE AND CONNECTOR COMPUTER INTERFACE WITH .002 MIN. THICK COATING OF FIND NO. 82 COMPUTER ASSEMBLY DIMENSIONS SHALL NOT BE EXCEEDED. CURE AT ROOM TEMP FOR 24 HOURS
44. BOND FIND NO. 84 ALONG EDGES TO FIND NO.5 PER ND1002004, TYPE V PRIOR TO ASSEMBLY OF FIND NOS 6 & 73
45. SHIM AS REQUIRED, PRIOR TO ASSEMBLY OF FIND NOS 6 OR 73, SURFACE 'C' TO WITHIN ±.002 OF SURFACE 'B' USING FIND NO. 84, NOT TO INCLUDE .004 REF DIMENSION OF FIND NO. 84

2003200 J

REVISIONS						
SYM	ZONE	DESCRIPTION	DR	CHK	DATE	APPROVED
A		REVISED PER TORR 28062				
B		REVISED PER TORR 3285				
C		REVISED PER TORR 30890				
D		REVISED PER TORR 32353				
E		REVISED PER TORR 32873				
F		REVISED PER TORR 32867				
G		REVISED PER TORR 33439				
H		REVISED PER TORR 34201				
J		REVISED PER TORR 34680				

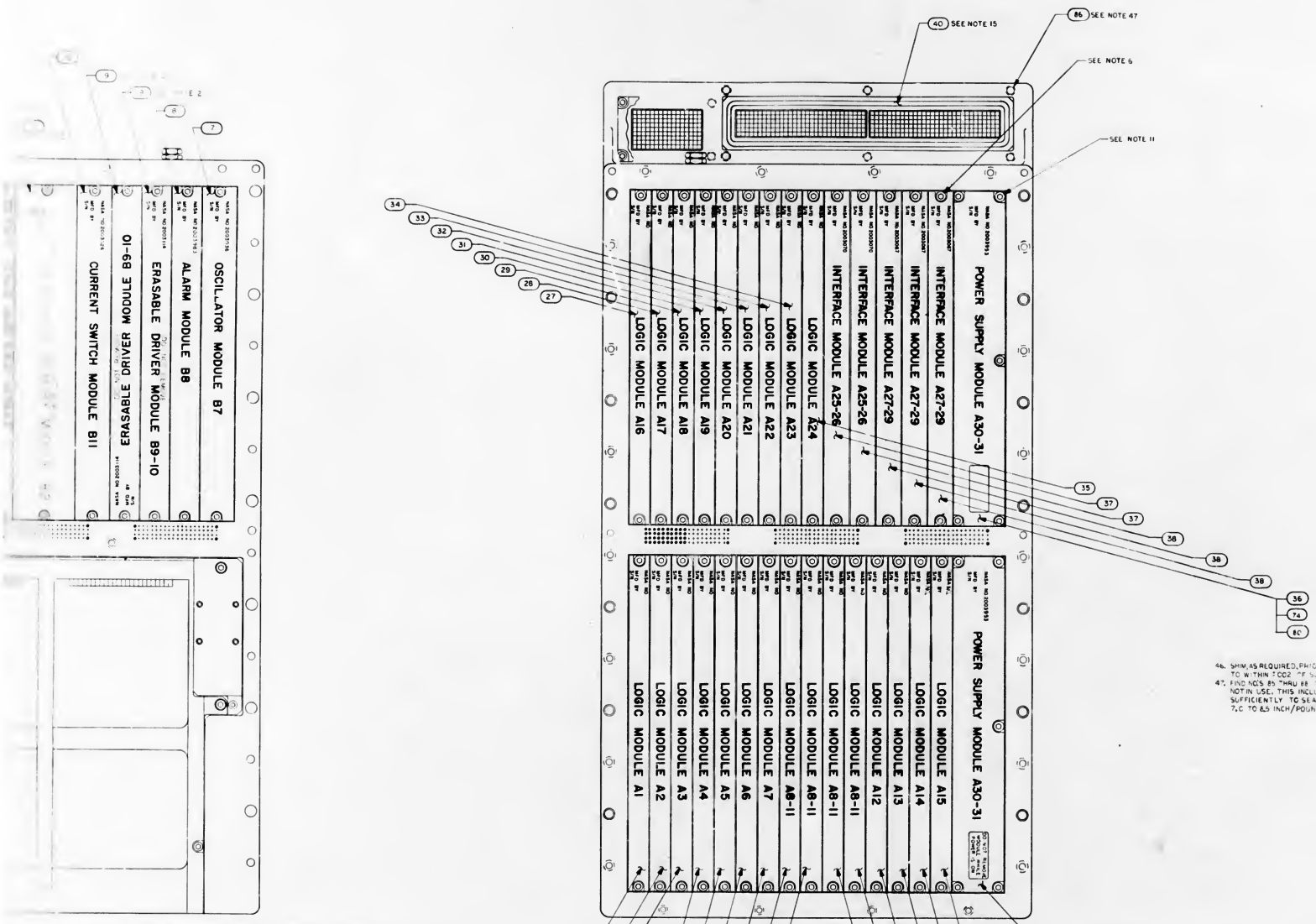

46. SHIM, AS REQUIRED, PRIOR TO ASSEMBLY OF FIND NOS 6 OR 73 SURFACE C TO WITHIN .002 OF SURFACE B USING FIND NO 81
47. FIND NOS 85 THRU 88 TO BE USED AT ALL TIMES THAT THREADED HOLES ARE NOT IN USE. THIS INCLUDES SHIPPING. ALL SCREWS SHALL BE TORQUED SUFFICIENTLY TO SEAL THREADED HOLES EXCEPT FIND NO 87 TO BE TORQUED 7.0 TO 8.5 INCH/POUNDS

35. FOR INTERFACE MODULE A25—26 USE EITHER 2003070-021 OR 2003070-031
36. FOR INTERFACE MODULE A27—29 USE EITHER 2003067-031 OR 2003067-041
38. FOR POWER SUPPLY MODULE B16— 7 USE EITHER 2003140-021 OR 2003140-031
40. ELECTRICAL OSCILLATORS OF B4 AND B12 CONNECTORS USING FIND NO. 81 PRIOR TO ASSEMBLY TO FIND NOS TO FIND NO.4
41. ALL EXPOSED HARDWARE AND CONNECTOR COMPUTER INTERFACE WITH .002 MIN THICK COATING OF FIND NO 82 COMPUTER ASSEMBLY DIMENSIONS SHALL NOT BE EXCEEDED. CURE AT ROOM TEMP FOR 24 HOURS
42. BOND FIND NO. 84 ALONG EDGES TO FIND NO.5 PER NDIC02004, TYPE I PRIOR TO ASSEMBLY OF FIND NO'S 6 OR 73
43. SHIM AS REQUIRED PRIOR TO ASSEMBLY OF FIND NO'S 6 OR 73, SURFACE 'C' TO WITHIN .002 OF SURFACE 'B' USING FIND NO. 84, NOT TO INCLUDE .004 REF DIMENSION OF FIND NO. 86

NEXT ASSY	USED ON
APPLICATION	

UNLESS OTHERWISE SPECIFIED DIMENSIONS ARE IN INCHES
CAPACITOR VALUES ARE IN μf
RESISTOR VALUES ARE IN OHMS
TOLERANCES ON
FRACTIONS DECIMALS ANGLES
± ± ±
DO NOT SCALE THIS DRAWING
MATERIAL

QTY REQD	PART OR IDENTIFYING NO	NOMENCLATURE OR DESCRIPTION	FIND NO
		LIST OF MATERIALS	

MIT INSTRUMENTATION LAB
CAMBRIDGE MASS

MANNED SPACECRAFT CENTER
HOUSTON TEXAS

DRAWN
CHECKED
APPROVED
APPROVED MIT
APPROVED NASA

COMPUTER ASSEMBLY

CODE IDENT NO	SIZE	DRAWING NO
80230	J	2003200

DATE SCALE SHEET 2 OF 2

2003200

[redacted]

CHART "A" (SEE NOTE 30)		
PART NO.	PART NO.	MODULE
2003121-011	2003888-011	LOGIC MODULE A1
-021	-021	A2
-031	-031	A3
-041	-041	A4
-051	-051	A5
-061	-061	A6
-071	-071	A7
-081	-081	A8-A11
-091	-091	A12
-111	-111	A13
-121	-121	A14
-131	-131	A15
-141	-141	A16
-151	-151	A17
-161	-161	A18
-171	-171	A19
-181	-181	A20
-191	-191	A21
-211	-211	A22
-221	-221	A23
-231	2003888-231	LOGIC MODULE A24

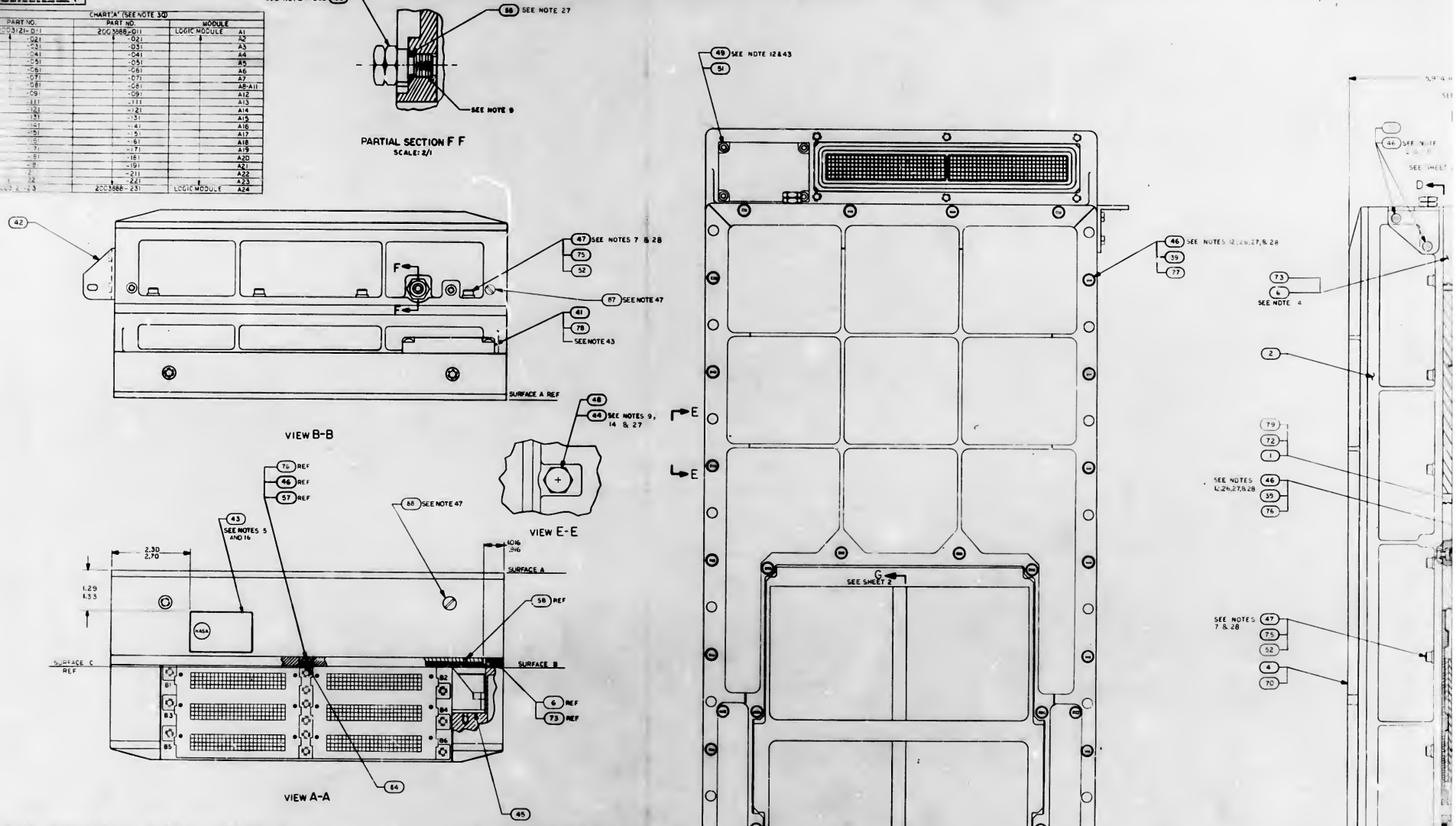

NOTES:

1. INTERPRET DRAWING IN ACCORDANCE WITH STANDARDS PRESCRIBED BY MIL-D-70327
2. PHANTOM LINES DENOTE A&C COLDPLATE AND HANDLING FIXTURE TO BE SUPPLIED BY NORTH AMERICAN AVIATION, INC.
3. ADD SILICONE COMPOUND 1006879 TO MODULE MATING METAL SURFACES AND TRAY MATING SURFACES
4. ASSEMBLE FIND NO 53 AND FIND NO 63 TO FIND NO 6 OR FIND NO 73 AND FIND NO 6 OR FIND NO 73 TO FIND NO 2 PRIOR TO ASSEMBLY OF FIND NO 2 TO FIND NO 1 OR FIND NO 72 OR FIND NO 79
5. ROTATE FIND NO 43 TO FIND NO 1 OR FIND NO 72 OR FIND NO 79 PER ND1002219, METHOD II
6. UNLESS OTHERWISE SPECIFIED TORQUE ALL MODULE MOUNTING SCREWS 15/19 INCH POUNDS
7. TORQUE FIND NO 47 OR FIND NO 75 TO 26/32 INCH POUNDS
8. [redacted]
9. APPLY SEALING COMPOUND MIL-S-22473 GRADE H TO FIND NO 53, FIND NO 56 AND FIND NO 44
10. COMPLETED ASSEMBLY SHALL BE TESTED IN ACCORDANCE WITH AND SHALL MEET ALL THE REQUIREMENTS OF PS2016005 OR PS2016007
11. TORQUE FOR FIND NO 36 MOUNTING SCREWS TO BE 10/12 INCH POUNDS
12. TORQUE FOR FIND NO 46, 49, 50, 76 AND 68 TO BE 18/22 INCH POUNDS
13. TORQUE FOR FIND NO 53 TO BE 4/6 INCH POUNDS
14. TORQUE FOR FIND NO 44 AND FIND NO 56 TO BE 137/157 INCH POUNDS
15. FIND NO 40 SHALL BE SUPPLIED AS PART OF THIS ASSEMBLY
16. [redacted]
17. [redacted]
18. [redacted]
19. [redacted]
20. BOND FIND NO 50 TO FIND NO 6 OR FIND NO 73 IN POSITION SHOWN USING 1006338
21. [redacted] MAY NOT BE REPLACED OR INTERCHANGED WITHOUT REPEATING NOMINAL SELECTION PROCEDURE PER NOTE 10
22. THE VALUE OF C1 TO BE DETERMINED AT ELECTRICAL TEST AND SELECTED FROM APPROPRIATE CHART
23. WHEN THE VALUE OF C1 IS "0" NO COMPONENT SHALL BE USED
24. ENCAPSULATE AREA SHOWN AFTER SELECTION AND INSTALLATION OF C1 USING ND1002089 METHOD C OR D USING PRIMER PER SCD 1012513
25. WELD PER ND1002009
26. ASSEMBLE HARDWARE WITH GREASE FREE OF FIND NO 36 IN CONTACT WITH BONDED HEAD
27. FIND NO 38, 40, 50 & 57 TO BE DISCARDED AND REPLACED WITH NEW PARTS EACH TIME THEY ARE DISASSEMBLED
28. SEAL EXPOSED HARDWARE ASSEMBLIES WITH .002 MIN THICK COATING OF FIND NO 82, OVERALL COMPUTER ASSEMBLY DIMENSIONS SHALL NOT BE EXCEEDED
29. KEEP ALL MATING THREADS OF SCREWS, TRAY AND FIND-SPACER INSERTS FREE OF SILICONE COMPOUND
30. FOR FIND NO 15 THRU 35, LOGIC MODULES A1 THRU A24 USE PART NO. 2003121-011 THRU 2003121-231 AND/OR 2003888-011 THRU 2003888-231 SEE CHART "A"
31. FOR TRAY "B" WIPED ASSY USE EITHER 2003092-041 OR 2003092-051 OR 2003092-061
32. FOR OSCILLATOR MODULE BY USE EITHER 2003036-021 OR 2003036-031
33. THRU 82 SEE SHEET 2

2003200 K

[redacted]

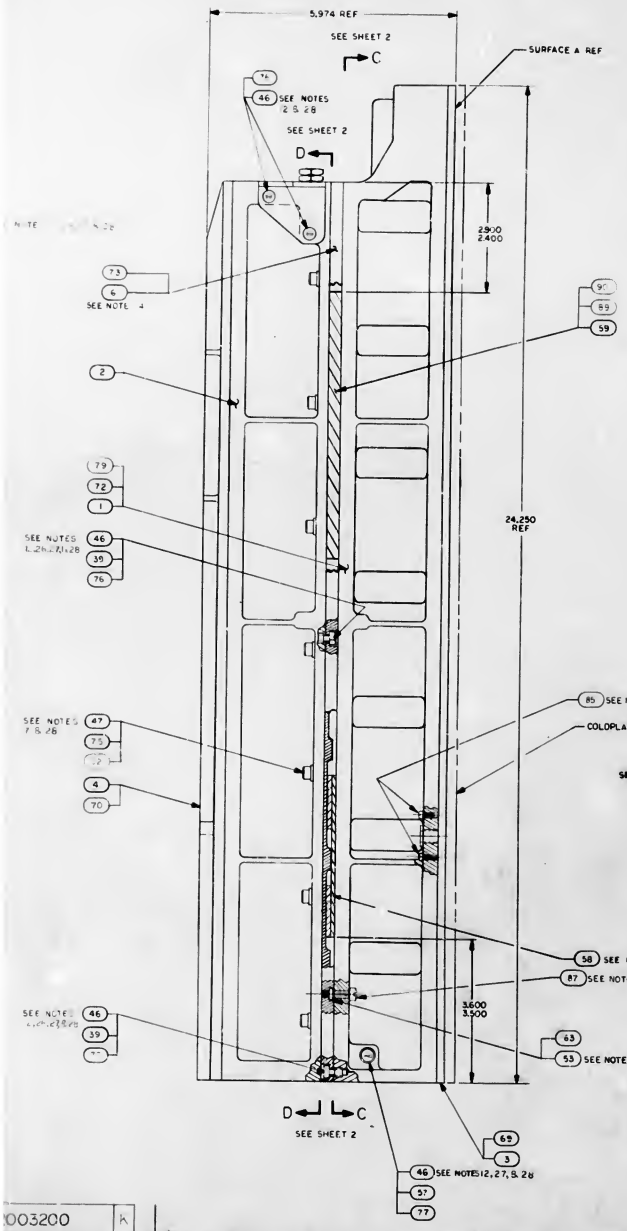

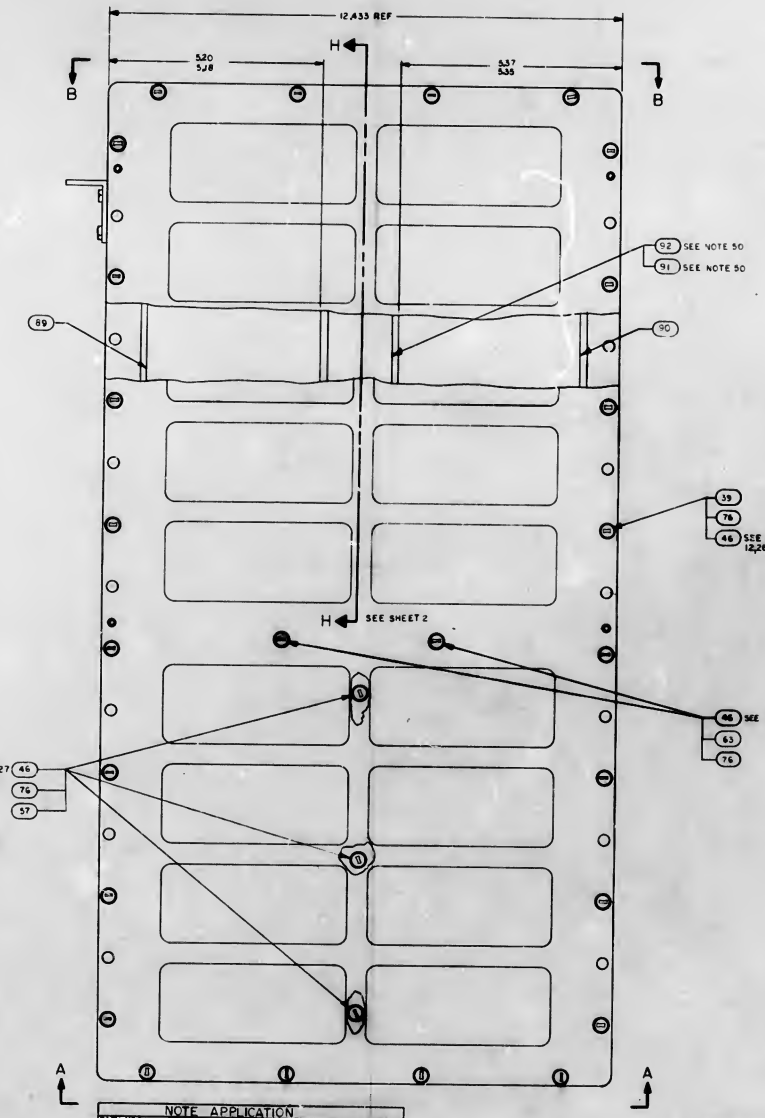

NOTE APPLICATION	
DASH NO.	NOTES APPLICABLE
-011	1 THRU 7, 9 THRU 16, 20 THRU 30, 32 THRU 40, 42 & 4 THRU 47 & 52
-021	1 THRU 7, 9 THRU 16, 20 THRU 30, 32 THRU 47 & 52
-031	1 THRU 7, 9 THRU 16, 20 THRU 30, 32 THRU 47 & 52
-041	1 THRU 7, 9 THRU 16, 20 THRU 30, 32 THRU 47 & 52
-051	1 THRU 7, 9 THRU 16, 20 THRU 30, 32 THRU 47 & 52

REVISIONS					
SYM	ZONE	DESCRIPTION	BY	CHK	DATE
A		REVISED PER TORR 28062			
B		REVISED PER TORR 30887			
C		REVISED PER TORR 30890			
D		REVISED PER TORR 32353			
E		REVISED PER TORR 32873			
F		REVISED PER TORR 32867			
G		REVISED PER TORR 33439			
H		REVISED PER TORR 34261			
J		REVISED PER TORR 34685			
K		REVISED PER TORR 35323			

	—	—	—	—		2004691	SHIM, VIBRATION DAMPENING	
	—	—	—	—		2004690	PAD, VIBRATION DAMPENING	
	—	—	—	—		2004699-007	PAD, VIBRATION	
	—	—	—	—		2004699-006	PAD, VIBRATION	
4	4	4	4	4		1010485-432	SCREW, NYLON	
11	11	11	11	11		1010485-332	SCREW, NYLON	
6	6	6	6	6		1010485-236	SCREW, NYLON	
28	28	28	28	28		1010485-000	SCREW, NYLON	
AR	AR	AR	AR	AR		2010801	SHIM AGC	
AR	AR	AR	AR	AR		2010800-000	SHIM	
AR	AR	AR	AR	AR	SEE NOTE 28	1006338-003	SEALING COMPOUND, SILICONE RUBBER	
AR	AR	AR	AR	AR	SEE NOTE 42	MIL-S-8660	SILICONE COMPOUND	
				—		2005943	AGC WIRE LIST	REF
2	—	—	—	—		2003892-011	POWER SUPPLY MOD A30-31	80
1	—	—	—	—		SEE NOTE 31	TRAY A WIRED ASSY	79
1	—	—	—	—		2005799-011	COVER, TEST CONN	78
33	33	33	33	—		2004732-002	SCREW, COATED	77
33	33	33	33	—		2004732-001	SCREW, COATED	76
18	18	18	18	—		2004732-003	SCREW, COATED	75
—	2	2	—	—		2003953-021	POWER SUPPLY MOD A30-31	74
1	1	1	1	—		2003978-001	MID-SPACER	73
—	1	1	1	—		2003092-021	TRAY A WIRE ASSY	72
2	2	2	2	—		SEE NOTE 41	ROPE DRIVER MODULE B16-B17	71
1	1	1	1	—		2003976-011	TRAY B COVER	70
1	1	1	1	—		2003977-011	TRAY A COVER	69
2	2	2	2	—		1001489-36	SCREW, HEX SOCKET HEAD	68
—	46	90	90	—		1006783-35	SCREW, BUTTON HEAD, HEX SOCKET	67
AR	AR	AR	AR	AR		1006338-000	SEALING COMPOUND, SILICONE RUBBER	66
AR	AR	AR	AR	AR		1006776-22	INSULATION SLEEVING, ELECTRICAL	65
—	—	—	—	—		2005036	AGC WIRE LIST	REF
1	1	1	1	1		SEE NOTE 22	CAPACITOR	64
10	10	10	10	10		2004148-007	WASHER, FLAT	63
1	1	1	1	1		2003981-011	SENSE AMPLIFIER MODULE, FIXED MEMORY B14	62
28	28	28	AR	AR		2004892-008	3 mm AGC	61
28	28	28	AR	AR		2004892-001	5 mm AGC	60
—	1	1	1	1		2004699-001	PAD VIBRATION	59
1	1	1	1	1		2003970	VIBRATION PAD ASSY	58
4	4	4	4	4		M515598-008N	WASHER, SEALING	57
1	1	1	1	1		2018773	VALVE, PRESSURE ASSEMBLY	56
1	1	1	1	1		1000159-5	PACKING, PREFORMED "O" RING	55
2	2	2	2	2		2004964-001	WASHER, FLAT	54
8	8	8	8	8		2004180	PAD, THREADED	53
18	18	18	18	18		2004894-004	WASHER, FLAT	52
—	—	4	4	4		2004894-012	WASHER, FLAT	51
—	—	—	—	2		1001489-34	SCREW, HEX SOCKET HEAD	50
—	—	4	4	4		2004722-2	SCREW, CAPTIVE	49
1	1	1	1	1		1000159-7	PACKING, PREFORMED "O" RING	48
—	48	48	48	18		M516996-14	SCREW, SOCKET HEAD, CAP	47
—	—	—	—	66		1006783-25	SCREW, BUTTON HEAD, HEX SOCKET	46
2	2	2	2	2		2004547	GASKET, PLATE	45
1	1	1	1	1		2004966	PLUG, MACHINE THREAD	44
1	1	1	1	1		1004260-19	NAME PLATE, TYPE 3	43
1	1	1	1	1		2004113-004	BRACKET, CABLE	42
1	1	1	1	1		2004118	COVER, NOTTED	41
1	1	1	1	1		1006380	GASKET, RETAINED	40
58	58	58	58	58		2004707	WASHER, KNURLED	39
3	3	3	3	3		SEE NOTE 40	INTERFACE MODULE A27-29	38
2	2	2	2	2		SEE NOTE 39	INTERFACE MODULE A25-26	37
—	—	—	2	2		2003993-011	POWER SUPPLY MODULE A30-31	36
1	1	1	1	1		SEE NOTE 30	LOGIC MODULE A24	35
1	1	1	1	1			LOGIC MODULE A23	34
1	1	1	1	1			LOGIC MODULE A22	33
1	1	1	1	1			LOGIC MODULE A21	32
1	1	1	1	1			LOGIC MODULE A20	31
1	1	1	1	1			LOGIC MODULE A19	30
1	1	1	1	1			LOGIC MODULE A18	29
1	1	1	1	1			LOGIC MODULE A17	28
1	1	1	1	1			LOGIC MODULE A16	27
1	1	1	1	1			LOGIC MODULE A15	26
1	1	1	1	1			LOGIC MODULE A14	25
1	1	1	1	1			LOGIC MODULE A13	24
1	1	1	1	1			LOGIC MODULE A12	23
4	4	4	4	4			LOGIC MODULE A8-11	22
1	1	1	1	1			LOGIC MODULE A7	21
1	1	1	1	1			LOGIC MODULE A6	20
1	1	1	1	1			LOGIC MODULE A5	19
1	1	1	1	1			LOGIC MODULE A4	18
1	1	1	1	1			LOGIC MODULE A3	17
1	1	1	1	1			LOGIC MODULE A2	16
1	1	1	1	1		SEE NOTE 30	LOGIC MODULE A1	15
—	—	—	—	2		2003140-011	ROPE DRIVER MODULE B16-17	14
1	1	1	1	1		SEE NOTE 38	STRAND SELECT MODULE B15	13
1	1	1	1	1		SEE NOTE 37	SENSE AMPL MOD, ERASABLE MEMORY B13	12
1	1	1	1	1		SEE NOTE 36	ERASABLE MEMORY MODULE B12	11
1	1	1	1	1		SEE NOTE 35	CURRENT SWITCH MODULE B11	10
2	2	2	2	2		SEE NOTE 34	ERASABLE DRIVER MODULE B9-10	9
1	1	1	1	1		SEE NOTE 33	ALARM MODULE B8	8
1	1	1	1	1		SEE NOTE 32	OSCILLATOR MODULE B7	7
—	—	—	—	1		2003978-000	MID SPACER	6
1	1	1	1	1		2003059-021	INTERCONNECTION HEADER ASSEMBLY	5
—	—	—	—	1		2003976-000	TRAY B COVER	4
—	1	—	—	—		2005977-000	TRAY A COVER	3
—	—	1	1	1		2003093-011	TRAY B WIRED ASSEMBLY	2
—	—	—	—	1		2005092-011	TRAY A WIRED ASSEMBLY	1
QTY REQUIRED -011	QTY REQUIRED -021	QTY REQUIRED -031	QTY REQUIRED -041	QTY REQUIRED -051		DESCRIPTION	NOMENCLATURE OR DESCRIPTION	FIND NO.

LIST OF MATERIALS

2003991 NEXT ASSY — USED ON

UNLESS OTHERWISE SPECIFIED DIMENSIONS ARE IN INCHES. EXPONENTIAL VALUES ARE IN 10^n. REFERENCE VALUES ARE IN CAPS. TOLERANCES ON: FRACTIONS ±, DECIMALS ±, ANGLES ±. DO NOT SCALE THIS DRAWING. MATERIAL —

MIT INSTRUMENTATION LAB CAMBRIDGE, MASS.

DRAWN — CHECKED — APPROVED — APPROVED — APPROVED — DATE

MANNED SPACECRAFT CENTER HOUSTON, TEXAS

COMPUTER ASSEMBLY

CODE IDENT NO. 80230 | SIZE J | DRAWING NO. 2003200 | SCALE — | SHEET 1 OF 7

2003200 K

SH1 / 2 2003200 K1 / 2

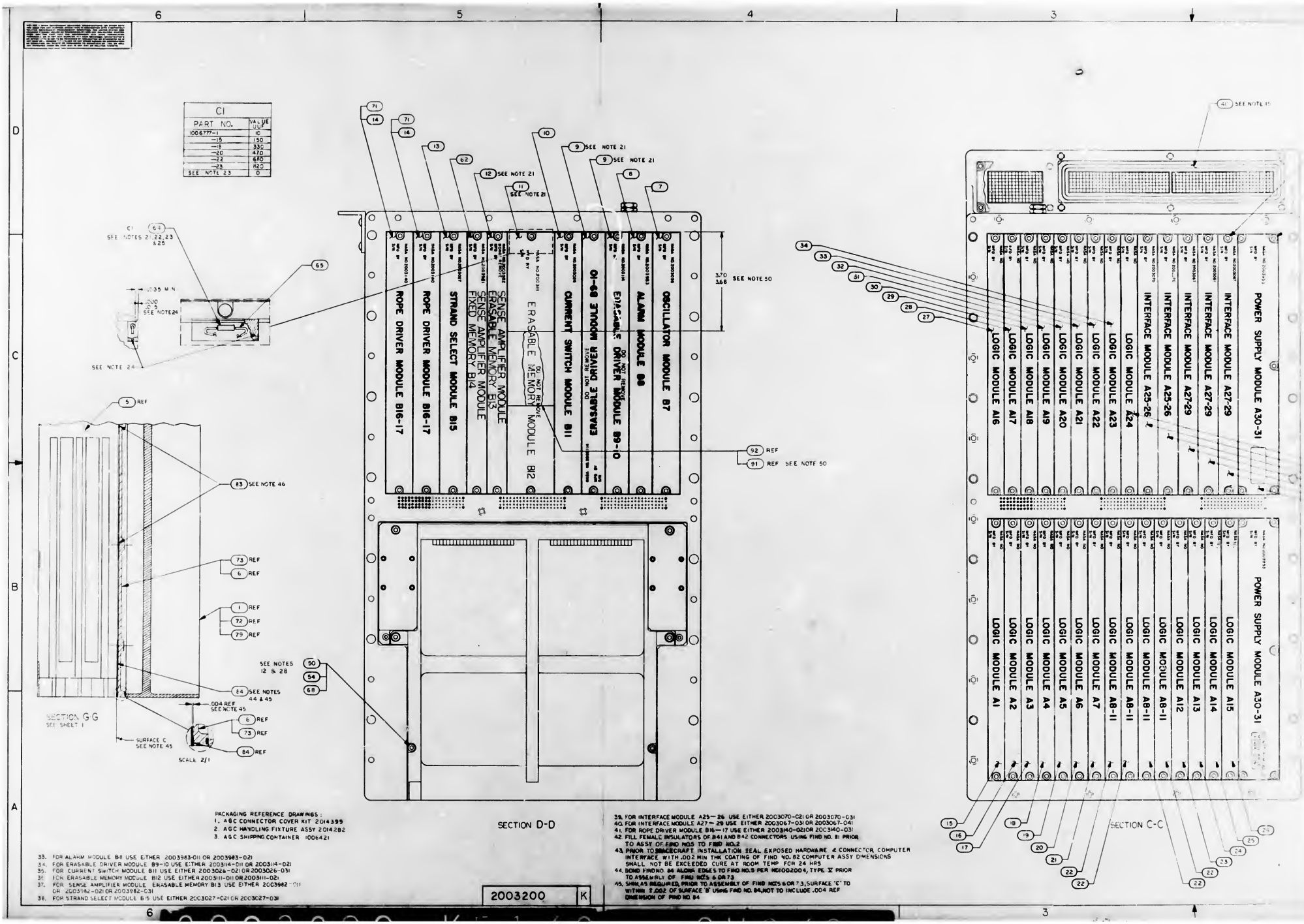
C1
PART NO. | VALUE UUF
1006777-1 | 10
-15 | 150
-18 | 330
-20 | 470
-22 | 680
-23 | 820
SEE NOTE 23 | 0
ROPE DRIVER MODULE B16-17
ROPE DRIVER MODULE B16-17
STRAND SELECT MODULE B15
SENSE AMPLIFIER MODULE ERASABLE MEMORY B13
SENSE AMPLIFIER MODULE FIXED MEMORY B14
ERASABLE MEMORY MODULE B12
DO NOT REMOVE
CURRENT SWITCH MODULE B11
ERASABLE DRIVER MODULE B9-10
ALARM MODULE B8
OSCILLATOR MODULE B7
SEE NOTE 21
SEE NOTE 50
SEE NOTE 46
SEE NOTES 44 & 45
SEE NOTES 12 & 28
SECTION G-G
SEE SHEET 1
SURFACE C SEE NOTE 45
SCALE 2/1
SECTION D-D
SECTION C-C
POWER SUPPLY MODULE A30-31
INTERFACE MODULE A27-29
INTERFACE MODULE A25-26
LOGIC MODULE A16
LOGIC MODULE A17
LOGIC MODULE A18
LOGIC MODULE A19
LOGIC MODULE A20
LOGIC MODULE A21
LOGIC MODULE A22
LOGIC MODULE A23
LOGIC MODULE A24
LOGIC MODULE A1
LOGIC MODULE A2
LOGIC MODULE A3
LOGIC MODULE A4
LOGIC MODULE A5
LOGIC MODULE A6
LOGIC MODULE A7
LOGIC MODULE A8-11
LOGIC MODULE A12
LOGIC MODULE A13
LOGIC MODULE A14
LOGIC MODULE A15
PACKAGING REFERENCE DRAWINGS:
1. AGC CONNECTOR COVER KIT 2014399
2. AGC HANDLING FIXTURE ASSY 2014282
3. AGC SHIPPING CONTAINER 1006421
33. FOR ALARM MODULE B8 USE EITHER 2003983-011 OR 2003983-021
34. FOR ERASABLE DRIVER MODULE B9-10 USE EITHER 2003114-011 OR 2003114-021
35. FOR CURRENT SWITCH MODULE B11 USE EITHER 2003026-021 OR 2003026-031
36. FOR ERASABLE MEMORY MODULE B12 USE EITHER 2003111-011 OR 2003111-021
37. FOR SENSE AMPLIFIER MODULE ERASABLE MEMORY B13 USE EITHER 2003982-011 OR 2003982-021 OR 2003982-031
38. FOR STRAND SELECT MODULE B15 USE EITHER 2003027-021 OR 2003027-031
39. FOR INTERFACE MODULE A25—26 USE EITHER 2003070-021 OR 2003070-031
40. FOR INTERFACE MODULE A27—29 USE EITHER 2003067-031 OR 2003067-041
41. FOR ROPE DRIVER MODULE B16—17 USE EITHER 2003140-021 OR 2003140-031
42. FILL FEMALE INSULATORS OF B41 AND B42 CONNECTORS USING FIND NO. 81 PRIOR TO ASSY OF FIND NOS TO FIND NO.2
43. PRIOR TO SPACECRAFT INSTALLATION SEAL EXPOSED HARDWARE & CONNECTOR COMPUTER INTERFACE WITH .002 MIN THK COATING OF FIND NO. 82 COMPUTER ASSY DIMENSIONS SHALL NOT BE EXCEEDED CURE AT ROOM TEMP FOR 24 HRS
44. BOND FIND NO. 84 ALONG EDGES TO FIND NO.5 PER MD1002004, TYPE X PRIOR TO ASSEMBLY OF FIND NOS 6 OR 73
45. SHIM AS REQUIRED PRIOR TO ASSEMBLY OF FIND NOS 6 OR 73, SURFACE 'C' TO WITHIN ±.002 OF SURFACE 'B' USING FIND NO. 84, NOT TO INCLUDE .004 REF DIMENSION OF FIND NO. 84
2003200
K

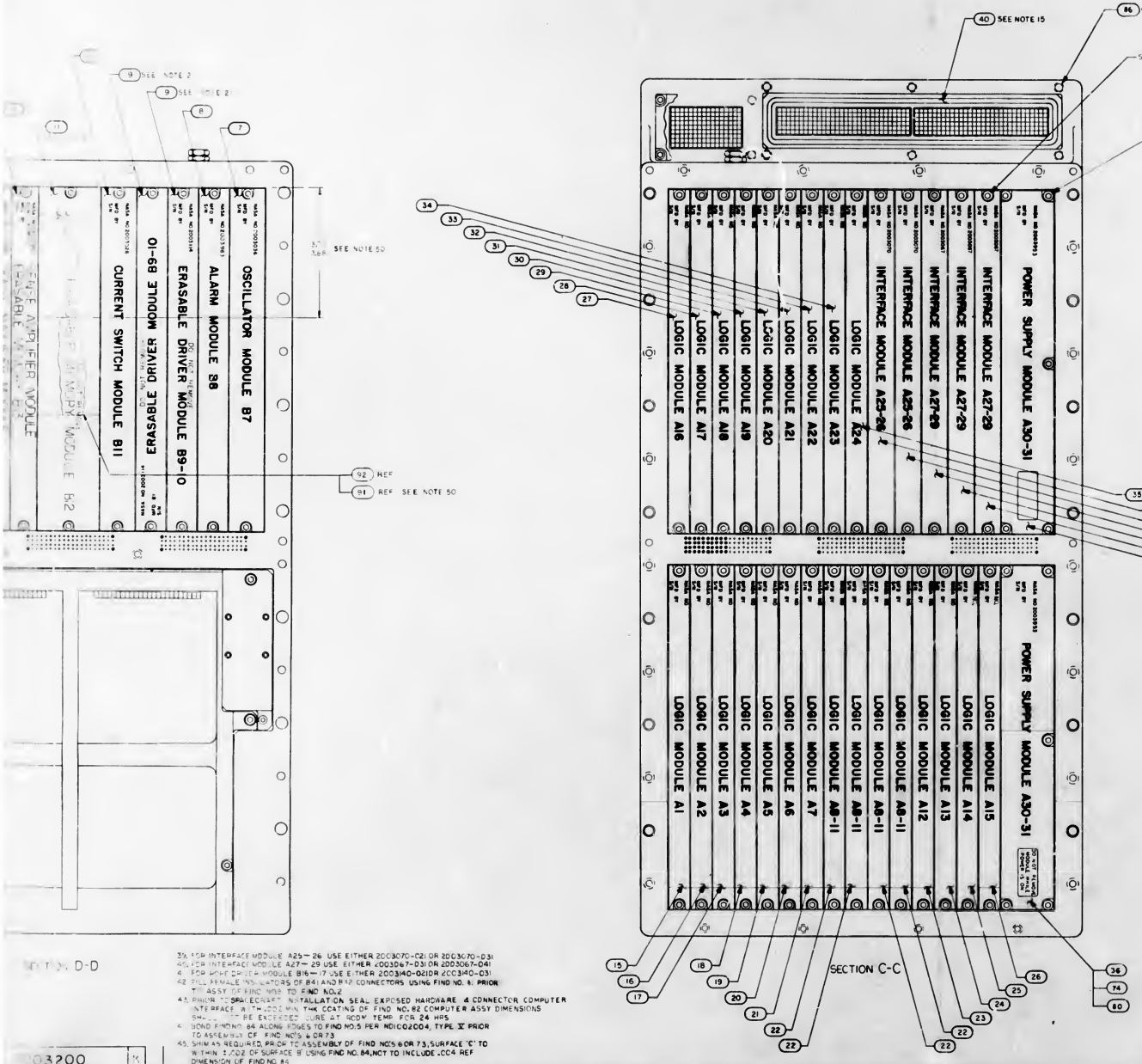

SYM	ZONE	DESCRIPTION	BY	CHK	DATE	APPROVED
A		REVISED PER TORR 28062				
B		REVISED PER TORR 30859				
C		REVISED PER TORR 30890				
D		REVISED PER TORR 32353				
E		REVISED PER TORR 32873				
F		REVISED PER TORR 32867				
G		REVISED PER TORR 33439				
H		REVISED PER TORR 34261				
J		REVISED PER TORR 34680				
K		REVISED PER TORR 35253				

39. FOR INTERFACE MODULE A25—26 USE EITHER 2003070-021 OR 2003070-031
40. FOR INTERFACE MODULE A27—29 USE EITHER 2003067-031 OR 2003067-041
41. FOR MOTOR DRIVER MODULE B16—17 USE EITHER 2003140-021 OR 2003140-031
42. FILL FEMALE INSULATORS OF B41 AND B12 CONNECTORS USING FIND NO. 81 PRIOR TO ASSY OF FIND NOS TO FIND NO.92
43. PRIOR TO SPACECRAFT INSTALLATION SEAL EXPOSED HARDWARE & CONNECTOR COMPUTER INTERFACE WITH .002 MIN THK COATING OF FIND NO. 82 COMPUTER ASSY DIMENSIONS SHALL NOT BE EXCEEDED CURE AT ROOM TEMP FOR 24 HRS
44. BOND FIND NO. 84 ALONG EDGES TO FIND NO.5 PER NDIC02004, TYPE II PRIOR TO ASSEMBLY OF FIND NOS 6 OR 73
45. SHIM AS REQUIRED PRIOR TO ASSEMBLY OF FIND NOS 6 OR 73, SURFACE 'C' TO WITHIN .002 OF SURFACE 'B' USING FIND NO. 84, NOT TO INCLUDE .004 REF DIMENSION OF FIND NO. 84
46. SHIM, AS REQUIRED, PRIOR TO ASSEMBLY OF FIND NOS 6 OR 73 SURFACE C TO WITHIN .002 OF SURFACE B USING FIND NO.82
47. FIND NOS 85 THRU 88 TO BE USED AT ALL TIMES THAT THREADED HOLES ARE NOT IN USE. THIS INCLUDES SHIPPING. ALL SCREWS SHALL BE TORQUED SUFFICIENTLY TO SEAL THREADED HOLES EXCEPT FIND NO 87 TO BE TORQUED 7.0 TO 8.5 INCH/POUNDS ALL HARDWARE NOT ASSEMBLED TO COMPUTE X WHEN SHIPPED BUT REQUIRED SHALL BE IDENTIFIED PER NDI 002219 & SHIPPED UNASSEMBLED
48. "A" DIM. TAKEN .350 FROM EDGE OF FIND NO. 35
49. "B" DIM. TAKEN .350 FROM EDGE OF FIND NO. 35
50. USE FOLLOWING PROCEDURE FOR INSTALLATION OF VIBRATION DAMPENING PAD FIND NO. 91 & SHIM FIND NO. 92
    (A) MEASURE DIMENSIONS "A" & "B" (SEE PARTIAL SECTION HH)
    (B) TOTAL DIM. OF PAD FIND NO. 91, SHIM FIND NO. 92 & BONDING MAT'L PER NOTE 51 & .050 (D) MUST BE EQUAL TO THE AVERAGE OF DIMENSIONS "A" & "B" PLUS .004. THIS TOTAL DIM. MUST BE OBTAINED BY MACHINING THE SHIM FIND NO. 92 TO THE REQUIRED THICKNESS PRIOR TO BONDING TO FIND NO. 91
    (C) BOND FIND NO. 92 AFTER MACHINING TO THICKNESS TO FIND NO. 91 USING NDI 003361 USE BONDING MAT'L SPARINGLY
    (D) BOND ASSY OF FIND NOS 91 & 92 TO FIND NO. 1 USING NDI 003338 BOND AT CENTER AREA & ON BOTH ENDS FIND NO. 92 TO INTERFACE WITH FIND NO. 1
51. WHEN FIND NO. 1, 34, 35, 37, 6 OR 73 IS REMOVED & REPLACED REPEAT NOTE 50
52. TORQUE FOR PLUG OF FIND NO. 56 TO BE 25-35 IN/LBS

QTY REQD	PART OR IDENTIFYING NO	NOMENCLATURE OR DESCRIPTION	FIND NO
		LIST OF MATERIALS	

MIT INSTRUMENTATION LAB CAMBRIDGE MASS

MANNED SPACECRAFT CENTER HOUSTON, TEXAS

COMPUTER ASSEMBLY

CODE IDENT NO 80230 | SIZE J | DRAWING NO 2003200 | SHEET 2 OF 2

UNLESS OTHERWISE SPECIFIED DIMENSIONS ARE IN INCHES CAPACITOR VALUES ARE IN µf RESISTOR VALUES ARE IN OHMS TOLERANCES ON FRACTIONS DECIMALS ANGLES DO NOT SCALE THIS DRAWING

NEXT ASSY | USED ON | APPLICATION

2003200 K

[redacted]

CHART "A" (SEE NOTE 30)		
PART NO.	PART NO.	MODULE
2003 2-011	2003888-011	LOGIC MODULE A1
-021	-021	A2
-031	-031	A3
-041	-041	A4
-051	-051	A5
-061	-061	A6
-071	-071	A7
-081	-081	A8-A11
-091	-091	A12
-111	-111	A13
-121	-121	A14
-131	-131	A15
-141	-141	A16
-151	-151	A17
-161	-161	A18
-171	-171	A19
-181	-181	A20
-191	-191	A21
-211	-211	A22
-221	-221	A23
2003 2-231	2003888-231	LOGIC MODULE A24

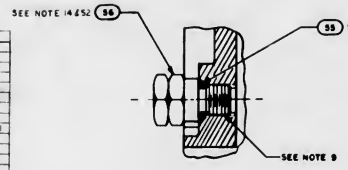

PARTIAL SECTION F F
SCALE: 2/1

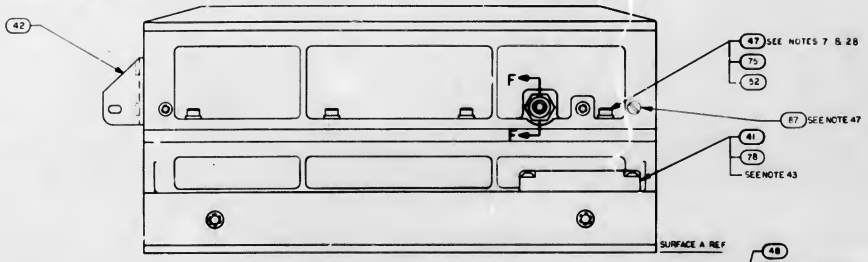

VIEW B-B

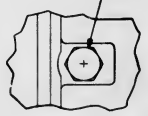

VIEW E-E

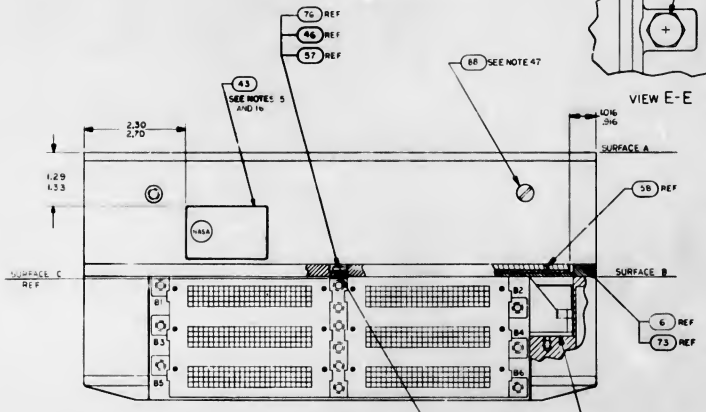

VIEW A-A

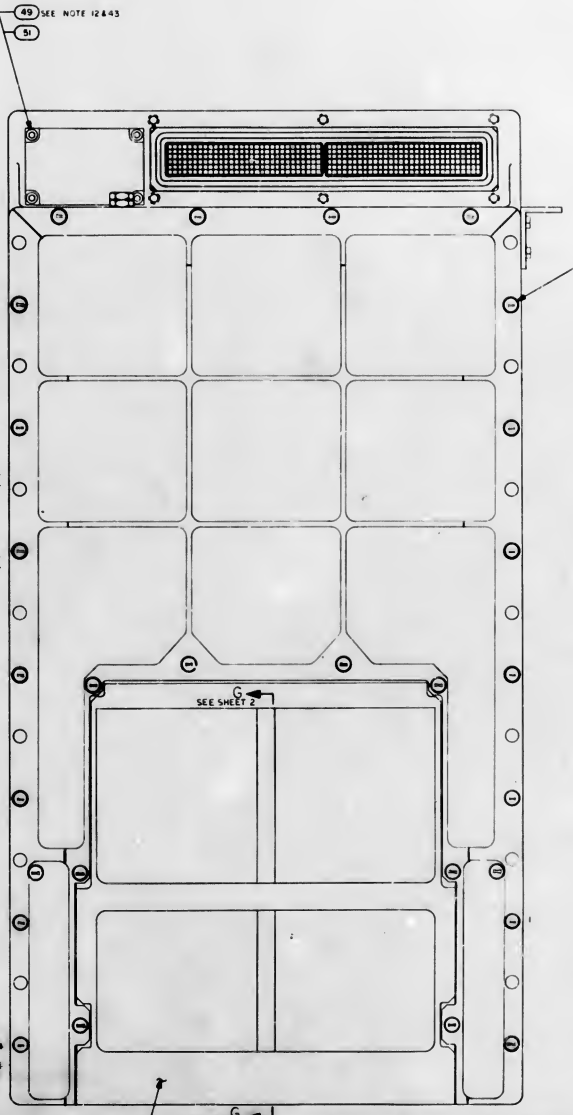

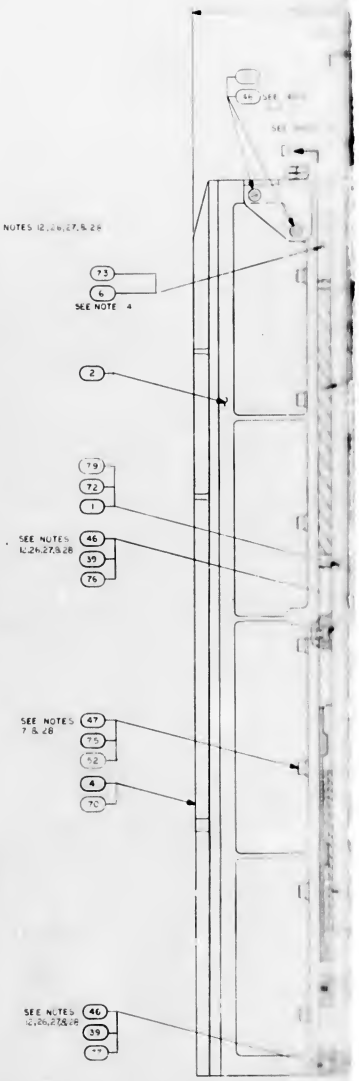

NOTES:

1. INTERPRET DRAWING IN ACCORDANCE WITH STANDARDS PRESCRIBED BY MIL-D-70327
2. PHANTOM LINES DENOTE ADJ. COLDPLATE AND HANDLING FIXTURE TO BE SUPPLIED BY NORTH AMERICAN AVIATION, INC.
3. ADD SILICONE COMPOUND 1006879 TO MODULE MATING METAL SURFACES AND TRAY MATING SURFACES
4. ASSEMBLE FIND NO. 53 AND FIND NO. 63 TO FIND NO. 6 OR FIND NO. 73 AND FIND NO. 6 OR FIND NO. 73 TO FIND NO. 2 PRIOR TO ASSEMBLY OF FIND NO. 2 TO FIND NO. 1 OR FIND NO. 72 OR FIND NO. 79
5. BOND FIND NO. 43 TO FIND NO. 1 OR FIND NO. 72 OR FIND NO. 79 PER ND1002219, METHOD II
6. UNLESS OTHERWISE SPECIFIED TORQUE ALL MODULE MOUNTING SCREWS 15/19 INCH POUNDS
7. TORQUE FIND NO. 47 OR FIND NO. 75 TO 28/32 INCH POUNDS
8. [redacted]
9. APPLY SEALING COMPOUND PER 1008953-004 TO FIND NO. 53, FIND NO. 56 AND FIND NO. 44
10. COMPLETED ASSEMBLY SHALL BE TESTED IN ACCORDANCE WITH AND SHALL MEET ALL THE REQUIREMENTS OF PS206005 OR PS206007
11. TORQUE FOR FIND NO. 56 MOUNTING SCREWS TO BE 10/12 INCH POUNDS
12. TORQUE FOR FIND NO. 46, 49, 50, 76 AND 68 TO BE 16/22 INCH POUNDS
13. TORQUE FOR FIND NO. 53 TO BE 4/6 INCH POUNDS
14. TORQUE FOR FIND NO. 44 AND FIND NO. 56 TO BE 137/157 INCH POUNDS
15. FIND NO. 40 SHALL BE SUPPLIED AS PART OF THIS ASSEMBLY
16. [redacted]
17. [redacted]
18. [redacted]
19. [redacted]
20. BOND FIND NO. 58 TO FIND NO. 6 OR FIND NO. 73 IN POSITION SHOWN USING 1006119
21. REFERENCED MODULES ARE NOT TO BE REPLACED OR INTERCHANGED WITHOUT RE-RATING NOMINAL SELECTION PROCEDURE PER NOTE 10
22. THE VALUE OF C1 TO BE DETERMINED AT ELECTRICAL TEST AND SELECTED FROM APPROPRIATE CHART
23. WHEN THE VALUE OF C1 IS "0" NO COMPONENT SHALL BE USED
24. ENCAPSULATE AREA SHOWN AFTER SELECTION AND INSTALLATION OF C1 USING ND1002089 METHOD C OR D USING PRIMER PER SCD 1012513
25. WELD PER ND1002009
26. ASSEMBLE HARDWARE WITH SMOOTH FACE OF FIND NO. 39 IN CONTACT WITH SCREW HEAD
27. FIND NO. 39, 46, 48, 58 & 57 TO BE DISCARDED AND REPLACED WITH NEW PARTS EACH TIME THEY ARE DISASSEMBLED
28. SEAL EXPOSED HARDWARE ASSEMBLIES WITH .002 MIN THICK COATING OF ND NO. 82, OVERALL COMPUTER ASSEMBLY DIMENSIONS SHALL NOT BE EXCEEDED
29. KEEP ALL MATING THREADS OF SCREWS, TRAY AND MID-SPACER INSERTS FREE OF SILICONE COMPOUND
30. FOR FIND NO. 15 THRU 35 LOGIC MODULES A1 THRU A24 USE PART NO. 2003121-011 THRU 2003121-231 AND/OR 2003888-011 THRU 2003888-231 SEE CHART A
31. FOR TRAY 6 WIPED ASSY USE EITHER 2003092-041 OR 2003092-051 OR 2003092-061
32. FOR OSCILLATOR MODULE B7 USE EITHER 2003036-021 OR 2003036-031
33. THRU 52 SEE SHEET 2

2003200

[redacted]

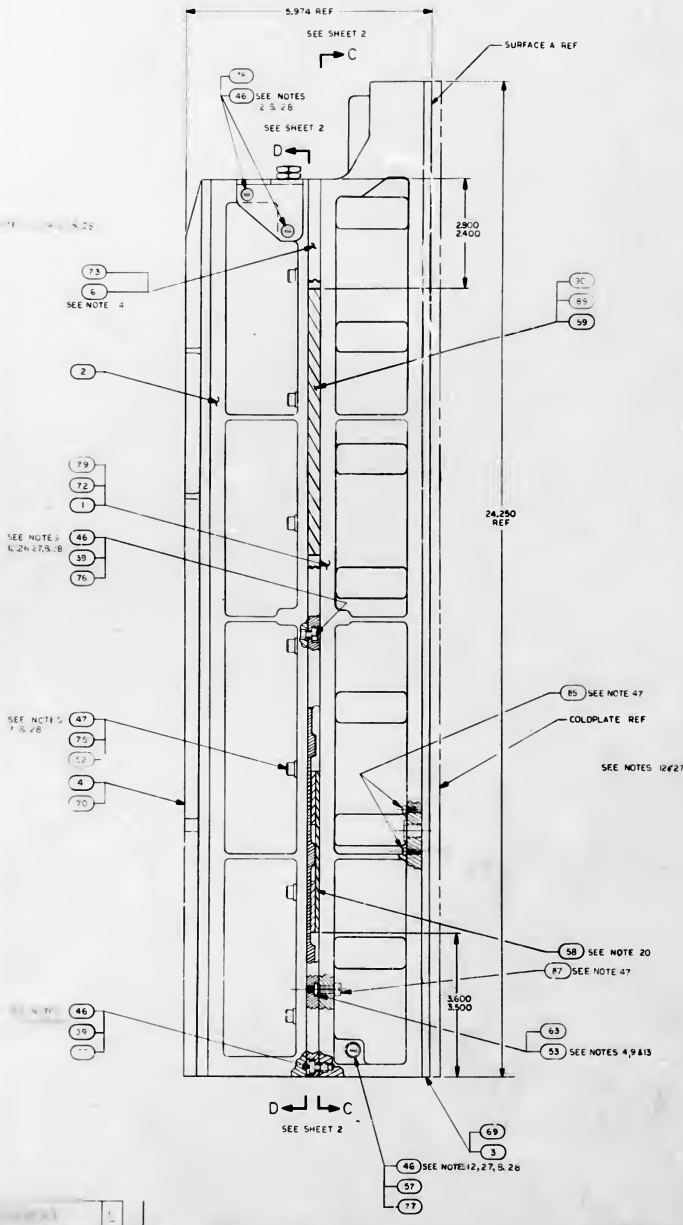

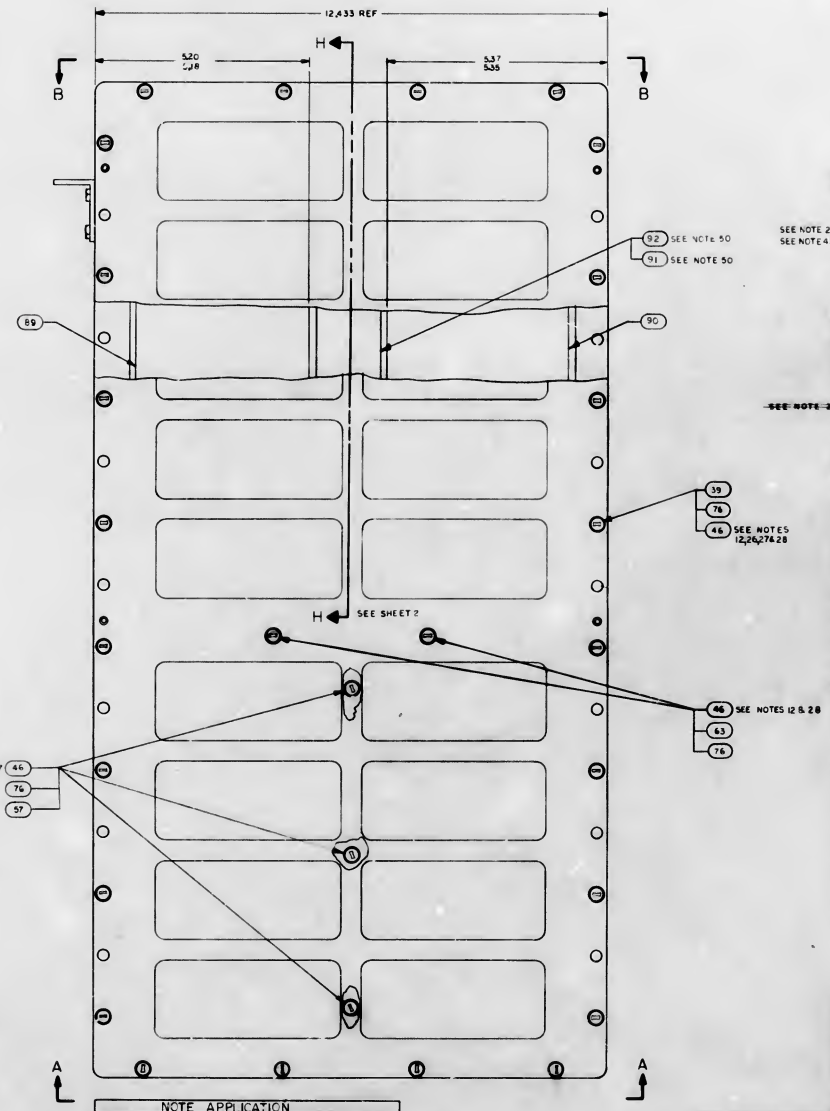

NOTE APPLICATION	
DASH NO.	NOTES APPLICABLE
-011	1 THRU 7, 9 THRU 16, 20 THRU 30, 32 THRU 40, 42 & 4 THRU 47 & 52
-021	1 THRU 7, 9 THRU 16, 20 THRU 30, 32 THRU 47 & 52
-031	1 THRU 7, 9 THRU 16, 20 THRU 30, 32 THRU 47 & 52
-041	1 THRU 7, 9 THRU 16, 20 THRU 30, 32 THRU 47 & 52
-051	1 THRU 7, 9 THRU 16, 20 THRU 52

REVISIONS

SYM	ZONE	DESCRIPTION	BY	CHK	DATE
A		REVISED PER TORR 26162			
B		REVISED PER TORR 30843			
C		REVISED PER TORR 32-90			
D		REVISED PER TORR 32353			
E		REVISED PER TORR 32873			
F		REVISED PER TORR [illegible]			
G		REVISED PER TORR 33439			
H		REVISED PER TORR 34426			
J		REVISED PER TORR 34966			
K		REVISED PER TORR 35033			
L		REVISED PER TORR 35[illegible]			

QTY 051-041	QTY 051-031	QTY 051-021	QTY 051-011	PART OR IDENTIFYING NO.	NOMENCLATURE OR DESCRIPTION	FIND NO.
—	—	—	—	2004691	SHIM, VIBRATION DAMPENING	92
1	—	—	—	2004690	PAD, VIBRATION DAMPENING	[illegible]
1	—	—	—	2004899-004	PAD, VIBRATION	[illegible]
1	—	—	—	2004899-006	PAD, VIBRATION	[illegible]
4	4	4	4	4	1010485-432	SCREW, NYLON
11	11	11	11	11	1010485-332	SCREW, NYLON
6	6	6	6	6	1010485-232	SCREW, NYLON
28	28	28	28	28	1010485-100	SCREW, NYLON
AR	AR	AR	AR	AR	2010801	SHIM, AGC
AR	AR	AR	AR	AR	2010800-000	SHIM
AR	AR	AR	AR	AR	1006338-003	SEALING COMPOUND, SILICONE RUBBER
AR	AR	AR	AR	AR	1008954	SILICONE COMPOUND
X	X	X	X	—	2005934354	AGC WIRE LIST
2	—	—	—	—	2003992-011	POWER SUPPLY MOD A30-31
1	—	—	—	—	SEE NOTE 31	TRAY A WIRED ASSY
1	1	—	—	—	2003995-011	COVER, TEST CONN
33	33	33	33	—	2004732-002	SCREW, COATED
33	33	33	33	—	2004732-001	SCREW, COATED
18	18	18	18	—	2004732-003	SCREW, COATED
—	2	2	—	—	2003953-021	POWER SUPPLY MOD A30-31
1	1	1	1	—	2003976-001	MID-SPACER
—	1	1	1	—	2003092-021	TRAY A WIRE ASSY
2	2	2	2	—	SEE NOTE 41	ROPE DRIVER MODULE B16-B17
1	1	1	1	—	2003976-011	TRAY B COVER
1	1	1	1	—	2003977-011	TRAY A COVER
2	2	8	2	—	1001489-36	SCREW, HEX SOCKET HEAD
—	60	60	60	—	1006783-28	SCREW, BUTTON HEAD HEX SOCKET
AR	AR	AR	AR	AR	2004295-000	SEALING COMPOUND, SILICONE RUBBER
AR	AR	AR	AR	AR	1005776-22	INSULATION SLEEVING, ELECTRICAL
—	—	—	—	X	2005036	AGC WIRE LIST
1	1	1	1	1	SEE NOTE 22	CAPACITOR
10	10	10	10	10	2004148-007	WASHER, FLAT
1	1	1	1	1	2003981-011	SENS AMPLIFIER MODULE, FIXED MEMORY B14
AR	AR	AR	AR	AR	2004895-002	SHIM AGC
AR	AR	AR	AR	AR	2004896-001	SHIM AGC
—	1	1	1	1	2004899-001	PAD VIBRATION
1	1	1	1	1	2003970	VIBRATION PAD ASSY
4	4	4	4	4	NAS599-008N	WASHER, SEALING
1	1	1	1	1	2018773	VALVE PRESSURE ASSEMBLY
1	1	1	1	1	1000159-8	PACKING, PREFORMED "O" RING
2	2	2	2	2	2004964-001	WASHER, FLAT
8	8	8	8	8	2004130	PAD, THREADED
18	18	18	18	18	2004894-014	WASHER, FLAT
—	—	4	4	4	2004894-012	WASHER, FLAT
—	—	—	2	2	1001489-34	SCREW, HEX SOCKET HEAD
—	—	4	4	4	1004722-2	SCREW, CAPTIVE
1	1	1	1	1	1000159-7	PACKING, PREFORMED "O" RING
—	48	48	48	18	NAS596-14	SCREW, SOCKET HEAD, CAP
—	—	—	—	66	1006783-25	SCREW, BUTTON HEAD, HEX SOCKET
2	2	2	2	2	1006347	GASKET, PLATE
1	1	1	1	1	2004986	PLUG, MACHINE THREAD
1	1	1	1	1	1004260-19	NAME PLATE, TYPE 3
1	1	1	1	1	2004113-001	BRACKET, CABLE
—	—	1	1	1	2004115	COVER, POTTED
1	1	1	1	1	1006380	GASKET, RETAINED
58	58	58	58	58	2004707	WASHER, KNURLED
3	3	3	3	3	SEE NOTE 40	INTERFACE MODULE A27-29
2	2	2	2	2	SEE NOTE 39	INTERFACE MODULE A25-26
—	—	—	2	2	2003953-011	POWER SUPPLY MODULE A30-31
1	1	1	1	1	SEE NOTE 30	LOGIC MODULE A24
1	1	1	1	1		LOGIC MODULE A23
1	1	1	1	1		LOGIC MODULE A22
1	1	1	1	1		LOGIC MODULE A21
1	1	1	1	1		LOGIC MODULE A20
1	1	1	1	1		LOGIC MODULE A19
1	1	1	1	1		LOGIC MODULE A18
1	1	1	1	1		LOGIC MODULE A17
1	1	1	1	1		LOGIC MODULE A16
1	1	1	1	1		LOGIC MODULE A15
1	1	1	1	1		LOGIC MODULE A14
1	1	1	1	1		LOGIC MODULE A13
1	1	1	1	1		LOGIC MODULE A12
4	4	4	4	4		LOGIC MODULE A8-11
1	1	1	1	1		LOGIC MODULE A7
1	1	1	1	1		LOGIC MODULE A6
1	1	1	1	1		LOGIC MODULE A5
1	1	1	1	1		LOGIC MODULE A4
1	1	1	1	1		LOGIC MODULE A3
1	1	1	1	1		LOGIC MODULE A2
1	1	1	1	1	SEE NOTE 30	LOGIC MODULE A1
—	—	—	—	2	2003140-011	ROPE DRIVER MODULE B16-17
1	1	1	1	1	SEE NOTE 38	STRAND SELECT MODULE B15
1	1	1	1	1	SEE NOTE 37	SENSE AMPL MOD, ERASABLE MEMORY B13
1	1	1	1	1	SEE NOTE 36	ERASABLE MEMORY MODULE B12
1	1	1	1	1	SEE NOTE 35	CURRENT SWITCH MODULE B11
2	2	2	2	2	SEE NOTE 34	ERASABLE DRIVER MODULE B9-10
1	1	1	1	1	SEE NOTE 33	ALARM MODULE B8
1	1	1	1	1	SEE NOTE 32	OSCILLATOR MODULE B7
—	—	—	—	1	2003978-000	MID SPACER
1	1	1	1	1	2003059-021	INTERCONNECTION HEADER ASSEMBLY
—	—	—	—	1	2003976-000	TRAY B COVER
—	—	—	—	1	2003977-000	TRAY A COVER
—	—	—	—	1	2003093-011	TRAY B WIRED ASSEMBLY
—	—	—	—	1	2003092-011	TRAY A WIRED ASSEMBLY

LIST OF MATERIALS

UNLESS OTHERWISE SPECIFIED DIMENSIONS ARE IN INCHES CAPACITOR VALUES ARE IN µf RESISTOR VALUES ARE IN OHMS TOLERANCES ON FRACTIONS ± DECIMALS ANGLES ± — ± — ± — DO NOT SCALE THIS DRAWING GENERAL —

2003991 NEXT ASSY USED ON APPLICATION

MIT INSTRUMENTATION LAB CAMBRIDGE MASS

MANNED SPACECRAFT CENTER HOUSTON, TEXAS

COMPUTER ASSEMBLY

CODE IDENT NO 80230 SIZE J DRAWING NO 2003200

SCALE NONE SHEET 1 OF 2

2003200 L

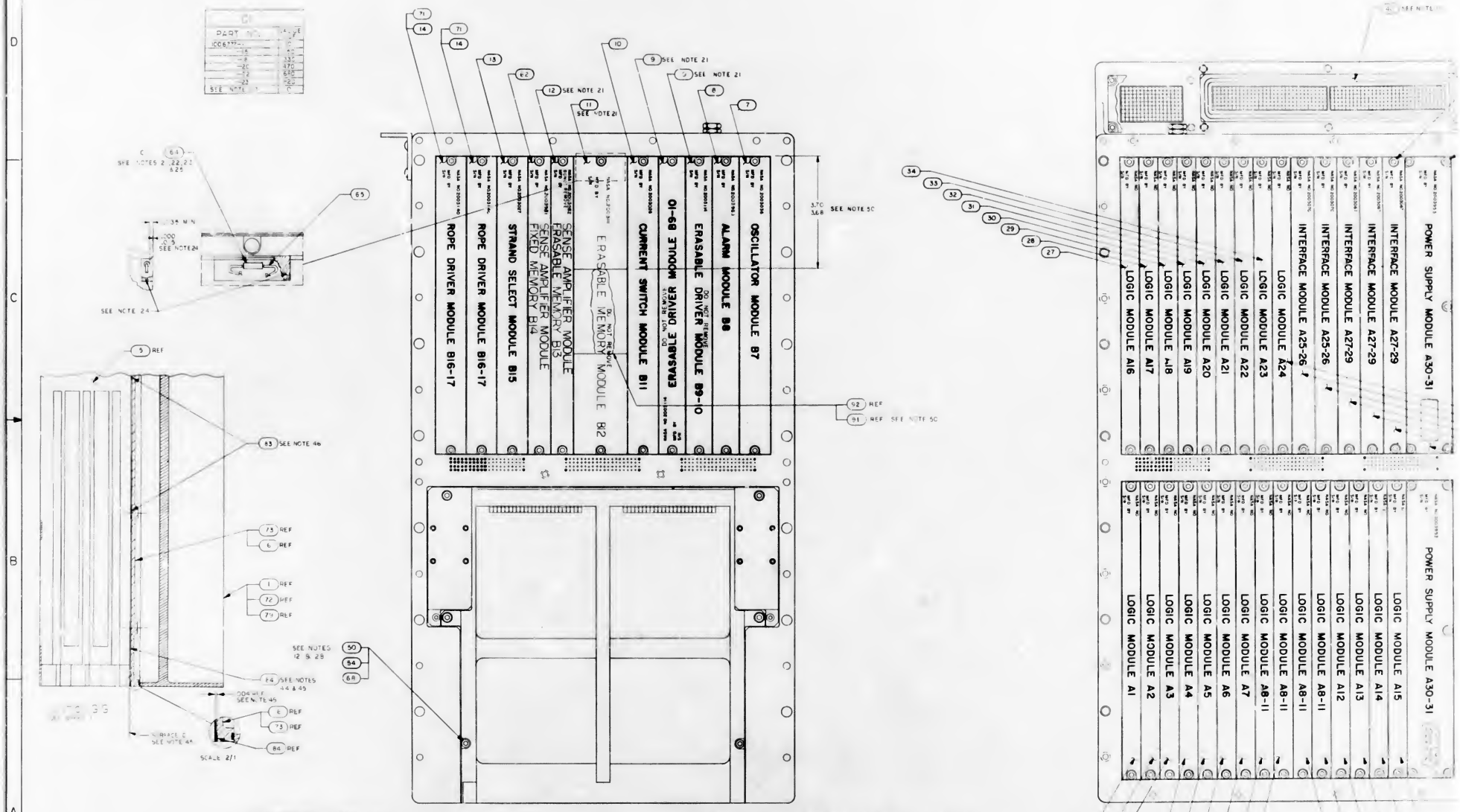

PACKAGING REFERENCE DRAWINGS
1. AGC CONNECTOR COVER KIT 2014399
2. AGC HANDLING FIXTURE ASSY 2014282
3. AGC SHIPPING CONTAINER 1006421

33. FOR ALARM MODULE B8 USE EITHER 2003983-011 OR 2003983-021
34. FOR ERASABLE DRIVER MODULE B9-10 USE EITHER 2003114-011 OR 2003114-021
35. FOR CURRENT SWITCH MODULE B11 USE EITHER 2003026-021 OR 2003026-031
36. FOR ERASABLE MEMORY MODULE B12 USE EITHER 2003111-011 OR 2003111-021
37. FOR SENSE AMPLIFIER MODULE ERASABLE MEMORY B13 USE EITHER 2003982-011 OR 2003982-021 OR 2003982-031
38. FOR STRAND SELECT MODULE B15 USE EITHER 2003027-021 OR 2003027-031
39. FOR INTERFACE MODULE A25-26 USE EITHER 2003070-021 OR 2003070-031
40. FOR INTERFACE MODULE A27-29 USE EITHER 2003067-031 OR 2003067-041
41. FOR ROPE DRIVER MODULE B16-17 USE EITHER 2003140-021 OR 2003140-031
42. FILL FEMALE INSULATORS OF B41 AND B42 CONNECTORS USING FIND NO. 81 PRIOR TO ASSY OF FIND NOS TO FIND NO.2
43. PRIOR TO SPACECRAFT INSTALLATION SEAL EXPOSED HARDWARE & CONNECTOR COMPUTER INTERFACE WITH .002 MIN THK COATING OF FIND NO. 82 COMPUTER ASSY DIMENSIONS SHALL NOT BE EXCEEDED CURE AT ROOM TEMP FOR 24 HRS
44. BOND FIND NO 84 ALONG EDGES TO FIND NO.5 PER NDI002004, TYPE I PRIOR TO ASSEMBLY OF FIND NO'S 6 OR 73
45. SHIM AS REQUIRED PRIOR TO ASSEMBLY OF FIND NO'S 6 OR 73, SURFACE 'C' TO WITHIN ±.002 OF SURFACE 'B' USING FIND NO. 84, NOT TO INCLUDE .004 REF DIMENSION OF FIND NO. 84

2003200 L

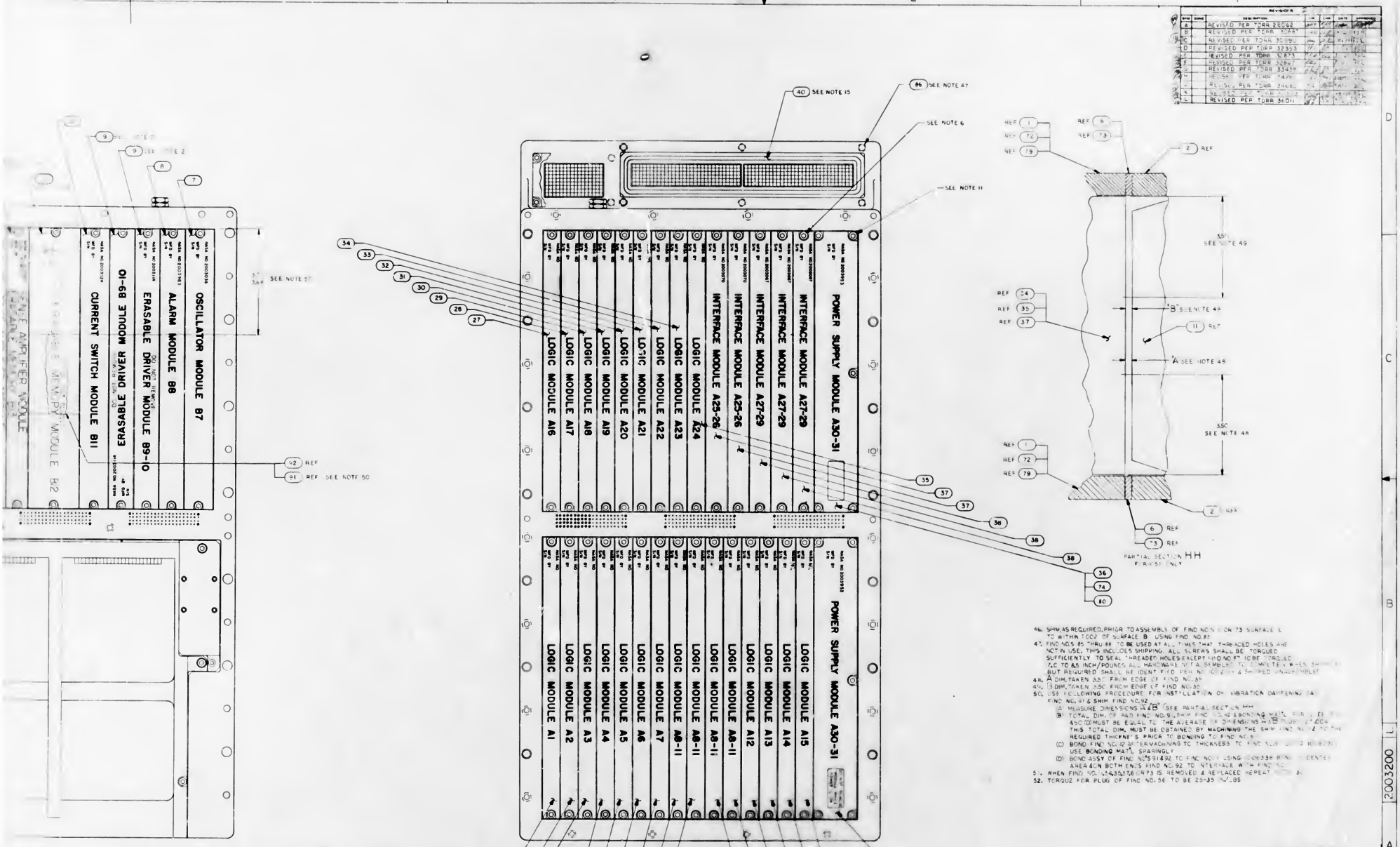
SEE NOTE 15
SEE NOTE 47
SEE NOTE 6
SEE NOTE 11
SEE NOTE 49
SEE NOTE 48
PARTIAL SECTION HH
FIND NO. 85 ONLY
SECTION C-C
D-D
POWER SUPPLY MODULE A30-31
INTERFACE MODULE A27-29
INTERFACE MODULE A25-26
LOGIC MODULE A24
LOGIC MODULE A23
LOGIC MODULE A22
LOGIC MODULE A21
LOGIC MODULE A20
LOGIC MODULE A19
LOGIC MODULE A18
LOGIC MODULE A17
LOGIC MODULE A16
LOGIC MODULE A15
LOGIC MODULE A14
LOGIC MODULE A13
LOGIC MODULE A12
LOGIC MODULE A11
LOGIC MODULE A9-11
LOGIC MODULE A8-11
LOGIC MODULE A7
LOGIC MODULE A6
LOGIC MODULE A5
LOGIC MODULE A4
LOGIC MODULE A3
LOGIC MODULE A2
LOGIC MODULE A1
OSCILLATOR MODULE B7
ALARM MODULE B8
ERASABLE DRIVER MODULE B9-10
CURRENT SWITCH MODULE B11
MEMORY MODULE B2
MIT INSTRUMENTATION LAB
MANNED SPACECRAFT CENTER
HOUSTON, TEXAS
COMPUTER ASSEMBLY
80230
J
2003200
SHEET 2 OF 2

2003875 A

REVISIONS

SYM	ZONE	DESCRIPTION	DR	CHK	DATE	APPROVED
A		INITIAL RELEASE TORR 32573			6 Jun 67	

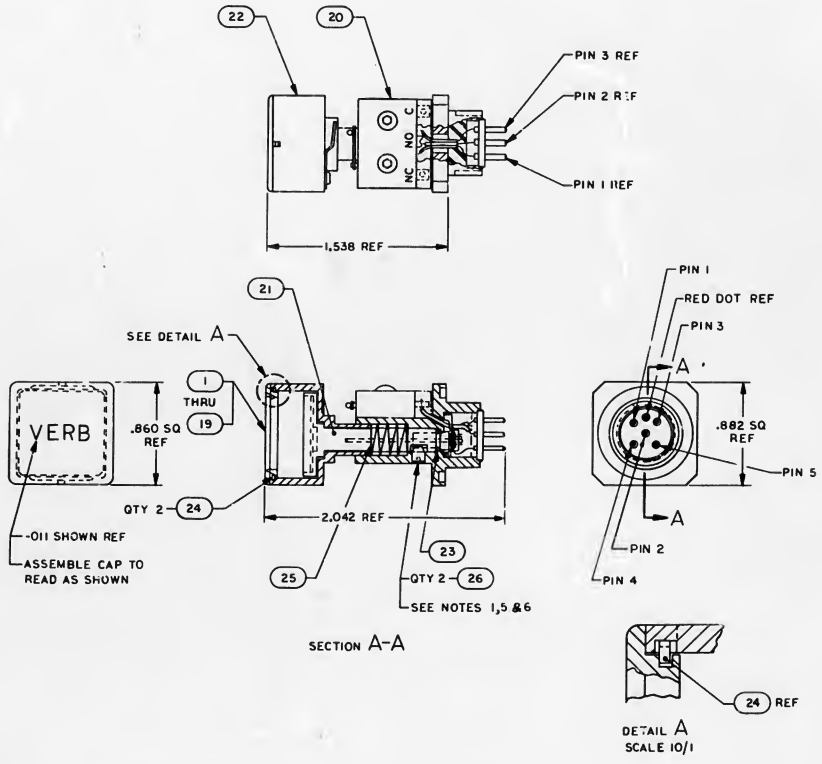

QTY REQD 211	QTY REQD 191	QTY REQD 181	QTY REQD 171	QTY REQD 161	QTY REQD 151	QTY REQD 141	QTY REQD 131	QTY REQD 121	QTY REQD 111	QTY REQD 091	QTY REQD 081	QTY REQD 071	QTY REQD 061	QTY REQD 051	QTY REQD 041	QTY REQD 031	QTY REQD 021	QTY REQD 011	PART OR IDENTIFYING NO.	NOMENCLATURE OR DESCRIPTION	FIND NO
2	2	2	2	2	2	2	2	2	2	2	2	2	2	2	2	2	2	2	AN565DC4H3	SET-SCREW	26
1	1	1	1	1	1	1	1	1	1	1	1	1	1	1	1	1	1	1	2004941	SPRING,COMPRESSION	25
2	2	2	2	2	2	2	2	2	2	2	2	2	2	2	2	2	2	2	2004944	SPRING,CAP RETAINING	24
1	1	1	1	1	1	1	1	1	1	1	1	1	1	1	1	1	1	1	1006369	PACKING PREFORM	23
1	1	1	1	1	1	1	1	1	1	1	1	1	1	1	1	1	1	1	2003926-011	HOUSING ASSY (CAP)	22
1	1	1	1	1	1	1	1	1	1	1	1	1	1	1	1	1	1	1	2003975-021	SHAFT ASSY	21
1	1	1	1	1	1	1	1	1	1	1	1	1	1	1	1	1	1	1	2003933-021	HOUSING ASSY (MOUNTING)	20
1	—	—	—	—	—	—	—	—	—	—	—	—	—	—	—	—	—	—	1006353-019	CAP,ELECTRICAL,ENGRAVED	19
—	1	—	—	—	—	—	—	—	—	—	—	—	—	—	—	—	—	—	-018		18
—	—	1	—	—	—	—	—	—	—	—	—	—	—	—	—	—	—	—	-017		17
—	—	—	1	—	—	—	—	—	—	—	—	—	—	—	—	—	—	—	-016		16
—	—	—	—	1	—	—	—	—	—	—	—	—	—	—	—	—	—	—	-015		15
—	—	—	—	—	1	—	—	—	—	—	—	—	—	—	—	—	—	—	-014		14
—	—	—	—	—	—	1	—	—	—	—	—	—	—	—	—	—	—	—	-013		13
—	—	—	—	—	—	—	1	—	—	—	—	—	—	—	—	—	—	—	-012		12
—	—	—	—	—	—	—	—	1	—	—	—	—	—	—	—	—	—	—	-011		11
—	—	—	—	—	—	—	—	—	1	—	—	—	—	—	—	—	—	—	-010		10
—	—	—	—	—	—	—	—	—	—	1	—	—	—	—	—	—	—	—	-009		9
—	—	—	—	—	—	—	—	—	—	—	1	—	—	—	—	—	—	—	-008		8
—	—	—	—	—	—	—	—	—	—	—	—	1	—	—	—	—	—	—	-007		7
—	—	—	—	—	—	—	—	—	—	—	—	—	1	—	—	—	—	—	-006		6
—	—	—	—	—	—	—	—	—	—	—	—	—	—	1	—	—	—	—	-005		5
—	—	—	—	—	—	—	—	—	—	—	—	—	—	—	1	—	—	—	-004		4
—	—	—	—	—	—	—	—	—	—	—	—	—	—	—	—	1	—	—	-003		3
—	—	—	—	—	—	—	—	—	—	—	—	—	—	—	—	—	1	—	-002		2
—	—	—	—	—	—	—	—	—	—	—	—	—	—	—	—	—	—	1	1006353-001	CAP,ELECTRICAL,ENGRAVED	1

LIST OF MATERIALS

NOTES

1. STAKE FIND NO.26 TO FIND NO.20 USING STAKING COMPOUND PER MIL-S-22473 TYPE HV
2. PINS INDICATED 1 THRU 5 ARE FOR REFERENCE ONLY AND ARE NOT TO BE MARKED
3. INTERPRET DRAWING IN ACCORDANCE WITH STANDARDS PRESCRIBED BY MIL-D-70327
4. IDENTIFY WITH PART NO. PER ND1002019
5. FIND NO.21 AND FIND NO.23 TO BE BOTTOMED BEFORE ASSEMBLING FIND NO.26
6. MOUNTING TORQUE OF FIND NO.26 TO BE 2.5 TO 2.8 INCH POUNDS

NEXT ASSY	USED ON
2003949	

APPLICATION

UNLESS OTHERWISE SPECIFIED
DIMENSIONS ARE IN INCHES
CAPACITOR VALUES ARE IN μf
RESISTOR VALUES ARE IN OHMS
TOLERANCES ON
FRACTIONS ± DECIMALS ± ANGLES ±
DO NOT SCALE THIS DRAWING

MATERIAL

MIT INSTRUMENTATION LAB
CAMBRIDGE, MASS

DRAWN 17 MAR 66
CHECKED 19 MAR 66
APPROVED
APPROVED 20 MAR 66
APPROVED CCA 1/4/67
APPROVED MSC
DATE

MANNED SPACECRAFT CENTER
HOUSTON, TEXAS

PUSH BUTTON SWITCH ASSEMBLY
PLUG IN UNIT
AGC DSKY

CODE IDENT NO 80230 | SIZE D | DRAWING NO 2003875

SCALE 2/1 | SHEET 1 OF 1

2003875 A

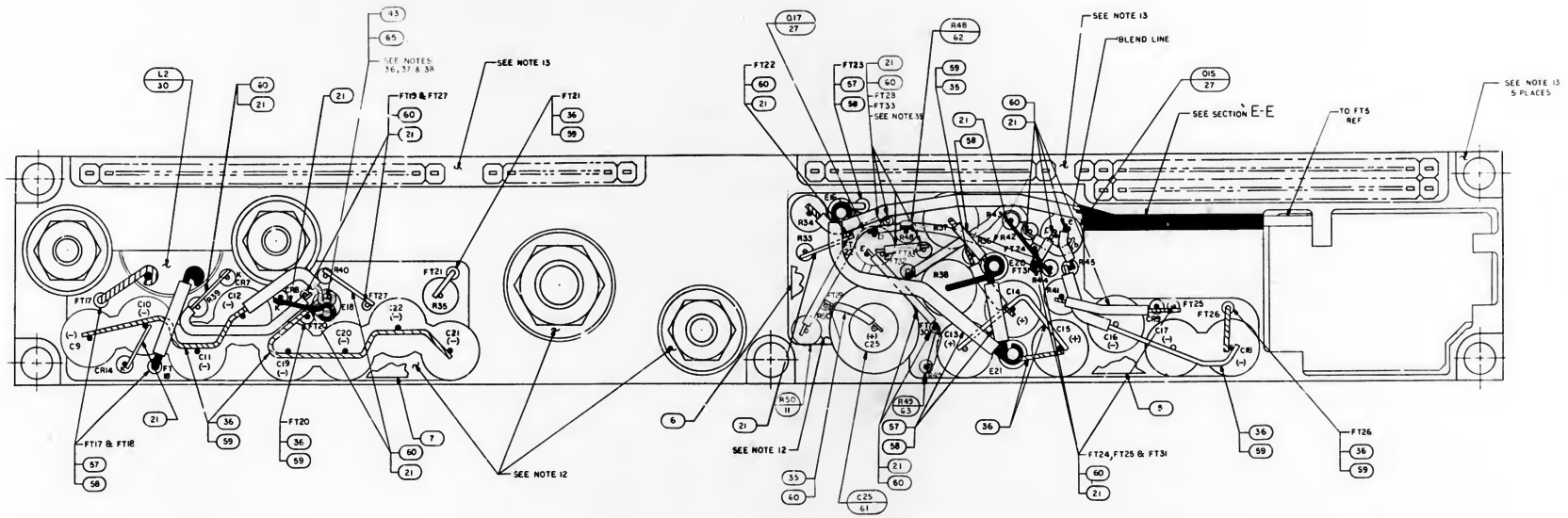

NOTES

1. INTERPRET DRAWING IN ACCORDANCE WITH STANDARDS PRESCRIBED BY MIL-D-70327
2. WELD PER ND1002005
3. UNLESS OTHERWISE SPECIFIED ALL WIRING SHALL BE IN ACCORDANCE WITH ND1002069
4. SOLDER PER ND1002071 USING SOLDER COMP SN60 FORM WIRE SOLID PER ND1002075 EXCEPT AS SHOWN
5. K DENOTES CATHODE SIDE OF DIODE
6. AR DENOTES AS REQUIRED
7. APPLY SILICONE GREASE, 1006879, TO INDICATED AREAS OF CR6, CR10 Q12 AND Q14
8. MOUNTING TORQUE FOR CR6 AND CR10 TO BE 25/30 INCH POUNDS
9. FIND NO 56 TO COVER SOLDER JOINT OF FIND NO.36 AND FIND NO.54
10. MOUNTING TORQUE FOR Q12 TO BE 15/30 INCH POUNDS
11. MOUNTING TORQUE FOR Q14 TO BE 13/15 INCH POUNDS
12. ENCAPSULATE PER ND1002002 EXCEPT PREHEAT MOLD 1 1/2 HOURS MIN AND CURE FOR 3 HRS MIN AT 200°±5°F. REMOVE FLASHING
13. INDICATED AREAS TO BE FREE OF ENCAPSULATION
14. STAKE FIND NO.10 THRU 20, 22, 23 27, 29 THRU 33, 35, 61, 62, 63 & 64 PER ND1002009 METHOD C OR D
15. FT DENOTES FEED THRU
16. + DENOTES POSITIVE SIDE OF CAPACITOR
17. SEAL INSULATORS, CONTACTS AND FIND NO. 37 TO HEADER PER ND1002004, TYPE VI
18. E DENOTES STAND-OFF
19. MARK .10/.08 HIGH WHITE CHARACTERS PER NO 1002019 AND ND1002122 TYPE II, CLASS 2 AND SERIALIZE PER ND1002023 USING INK 1006271-1
20. MARK .26/.24 HIGH WHITE CHARACTERS PER ND1002019 AND ND1002122 TYPE II, CLASS 2 USING INK 1006271-1
21. BLACK DOT & CROSS HATCHED WIRING INDICATES UPPER LEVEL WIRING
22. BLACK DOT & SOLID BLACK WIRING INDICATES SPECIAL LEVEL WIRING
23. WHITE DOT & CLEAR WIRING INDICATES LOWER LEVEL WIRING
24. MOUNTING TORQUE FOR FIND NO. 37 TO BE 15/20 INCH OUNCES
25. ENCAPSULATE FIND NO. 2 IN FIND NO. 1 TO DIM. SHOWN PER ND1002009, METHOD F
26. THE VALUE OF THE FOLLOWING COMPONENTS TO BE DETERMINED AT ELECTRICAL TEST. R1 AND R2 TO BE SELECTED FROM APPROPRIATE CHART
27. STAKE WIRE IN PLACE PER ND1002004, TYPE VI
28. BACKGROUND TO BE RED USING MARKING INK 1006271-9
29. MARK .10/.08 HIGH WHITE PER ND1002019 & ND1002122 TYPE II, CLASS 2, USING INK 1006271-1. CENTRALIZE AS SHOWN
30. COMPLETED ASSEMBLY SHALL BE TESTED IN ACCORDANCE WITH AND SHALL MEET ALL REQUIREMENTS OF PS2003892
31. ENCAPSULATE FIND NO 34 TO FIND NO 1 PER ND1002009 METHOD F
32. SEAL BOTTOM OF FIND NO. 2 PER ND1002009 METHOD C OR D PRIOR TO ENCAPSULATION PER NOTE 25
33. BOND FIND NO.43 TO FIND NO.1 PER ND1002004 TYPE VI
34. COAT TOP AND END SURFACES OF FIND NO. 23 AND 24 PER ND1002187 TYPE III
35. FILL CAVITY FOR FT32 & FT33 PER ND1002009 METHOD C OR D
36. MOUNTING TORQUE FOR FIND NO.65 TO BE 3.0/3.5 INCH POUNDS
37. SEAL INTERFACE OF FIND NO.65 AND FIND NO.1 .005 MIN PER ND1002004 TYPE VI
38. THE USE OF FIND NO. 65 TO FIND NO 1 AND HARDWARE TO ASSY OF ANY WIRE, THE RESISTANCE FROM E18 TO E3 SHALL BE NOT MORE THAN 0.1 OHMS

R1 AND R2	
PART NO.	VALUE
1006750-1	51
-2	56
-3	62
-4	68
-5	75
-6	82
-7	91
-8	100
-9	110
-10	120
-11	130
-12	150
-13	160
-14	180
-15	200
-16	220
-17	240
-18	270
-19	300
-20	330
-21	360
-22	390
-23	430
-24	470
1006750-25	510

SEE NOTE 13

SEE NOTE 2
CROSS SECTION

POTTING TO
BELOW THIS

2003892 A

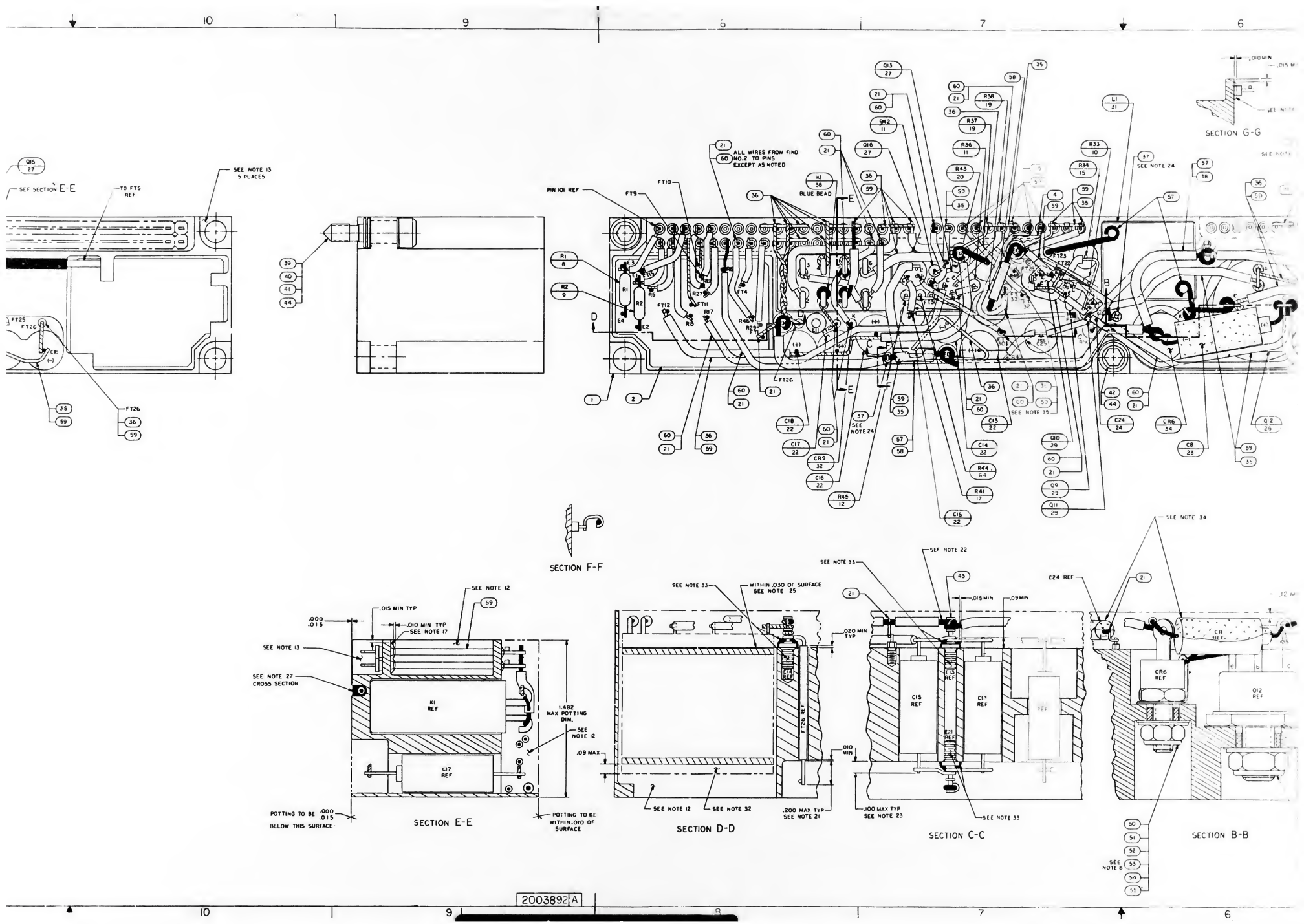
SEE SECTION E-E
TO FT5 REF
SEE NOTE 13 5 PLACES
FT25
FT26
C18
ALL WIRES FROM FIND NO.2 TO PINS EXCEPT AS NOTED
PIN 101 REF
K1 38 BLUE BEAD
SEE NOTE 24
SEE NOTE 35
SECTION G-G
SECTION F-F
SEE NOTE 12
.015 MIN TYP
.010 MIN TYP
SEE NOTE 17
SEE NOTE 13
SEE NOTE 27 CROSS SECTION
K1 REF
C17 REF
1.482 MAX POTTING DIM.
.09 MAX
POTTING TO BE .000 .015 BELOW THIS SURFACE
POTTING TO BE WITHIN .010 OF SURFACE
SECTION E-E
SEE NOTE 33
WITHIN .030 OF SURFACE SEE NOTE 25
FT26 REF
.020 MIN TYP
.010 MIN
SEE NOTE 32
.200 MAX TYP SEE NOTE 21
SECTION D-D
SEE NOTE 22
.015 MIN
.09 MIN
C15 REF
C17 REF
E13 REF
E21 REF
.100 MAX TYP SEE NOTE 23
SECTION C-C
SEE NOTE 34
C24 REF
CR6 REF
Q12 REF
SEE NOTE 8
SECTION B-B

2003892 A

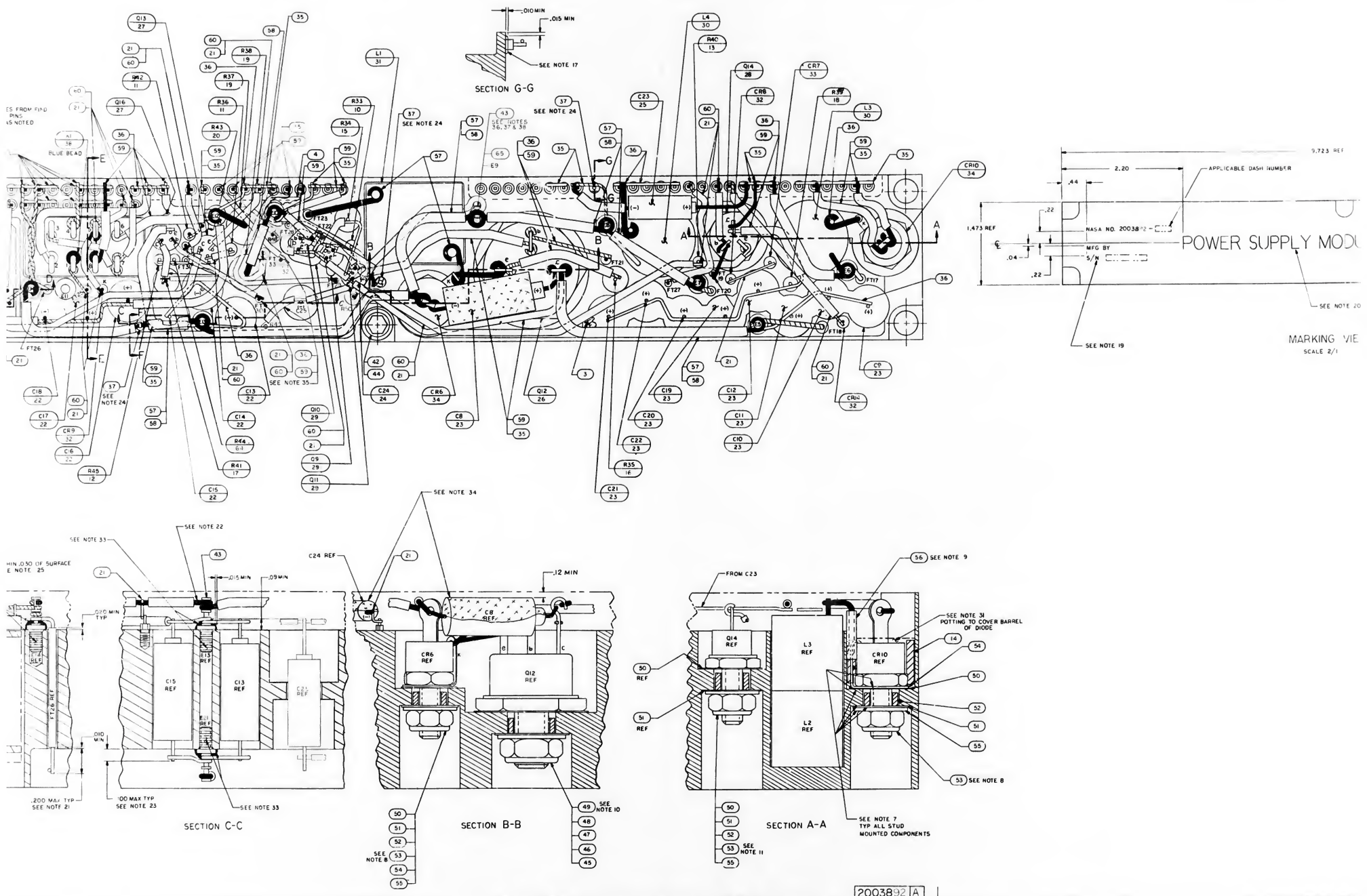
SECTION G-G
SEE NOTE 17
SEE NOTE 24
SEE NOTES 36, 37 & 38
SEE NOTE 35
BLUE BEAD
POWER SUPPLY MODU
MARKING VIE
SCALE 2/1
9.723 REF
2.20
APPLICABLE DASH NUMBER
NASA NO. 2003892 -
MFG BY
S/N
1.473 REF
SEE NOTE 20
SEE NOTE 19
SEE NOTE 34
SEE NOTE 22
SEE NOTE 33
SEE NOTE 25
SEE NOTE 21
SEE NOTE 23
SEE NOTE 10
SEE NOTE 8
SEE NOTE 11
SEE NOTE 9
SEE NOTE 31 POTTING TO COVER BARREL OF DIODE
SEE NOTE 7 TYP ALL STUD MOUNTED COMPONENTS
FROM C23
C24 REF
C8 REF
CR6 REF
Q12 REF
Q14 REF
L3 REF
L2 REF
CR10 REF
C15 REF
C13 REF
SECTION C-C
SECTION B-B
SECTION A-A

2003892 A

2003892 A

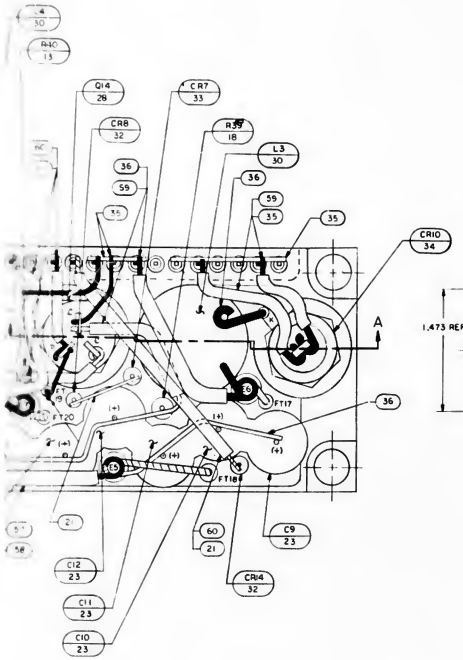

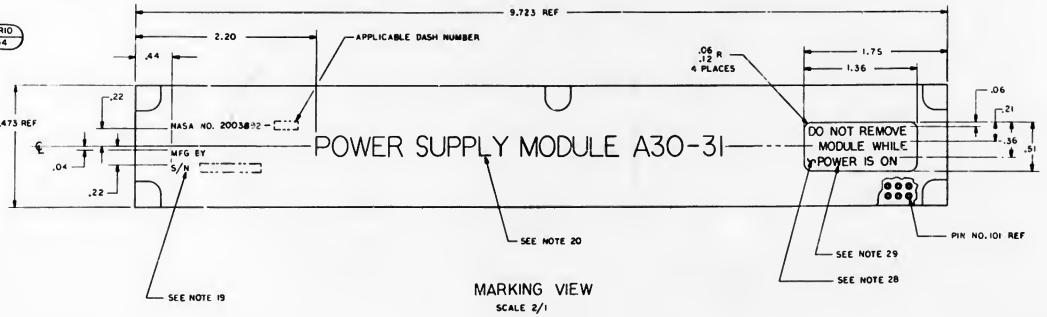

MARKING VIEW
SCALE 2/1

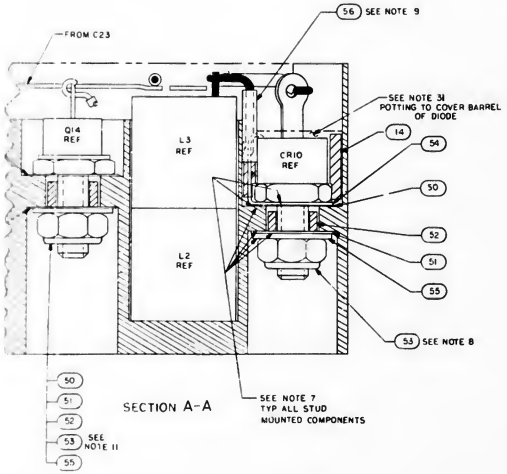

SECTION A-A

QTY REQD	PART OR IDENTIFYING NO	NOMENCLATURE OR DESCRIPTION	FIND NO
	2005971	SCHEMATIC	REF
2	2004737	TERMINAL STUD PANEL	67
1	1006750-28	RESISTOR	64
1	1006750-32	RESISTOR	63
1	1006788-4	RESISTOR	62
1	1004715-14	CAPACITOR	61
AR	1006776-22	INSULATION, SLEEVING	60
AR	1006776-20	INSULATION, SLEEVING	59
AR	1006776-18	INSULATION, SLEEVING	58
AR	QQW 343, TYPE S, 18	WIRE, ELEC	57
AR	1006776-30	INSULATION, SLEEVING	56
3	1008071-004	WASHER, FLAT	55
2	2008013-5	TERMINAL LUG	54
3	MS21083B3	NUT, HEX, SELF-LOCKING	53
3	1008025-5	BUSHING, INSULATOR	52
3	1008024-1	WASHER, INSULATOR	51
3	1008024-2	WASHER, INSULATOR	50
1	MS21083B5	NUT, HEX, SELF-LOCKING	49
1	1008071-7	WASHER, FLAT	48
1	2008020-3	BUSHING, INSULATOR	47
1	1008024-5	WASHER, INSULATOR	46
1	1008024-6	WASHER, INSULATOR	45
5	2004984-003	WASHER, FLAT	44
12	1006708	TERMINAL, STUD	43
1	1004722-2	SCREW, CAPTIVE	42
4	MS16633-4015	RING, RETAINING, EXTERNAL "E"	41
4	2004984-001	WASHER, FLAT	40
4	1006579-1	SCREW, LOCKING	39
1	1006304-003	RELAY	38
3	2004039	TERMINAL THREADED	37
AR	1006757-21	WIRE, ELEC	36
AR	1006757-23	WIRE, ELEC	35
2	1006329	DIODE	34
1	2004112-001	DIODE	33
3	2004183-001	DIODE	32
1	1006328	INDUCTOR	31
3	1006327	INDUCTOR	30
1	2004722	TRANSISTOR, SELECTION LIST	29
1	1006363-001	TRANSISTOR	28
4	2004184-001	TRANSISTOR, POTTED	27
1	1006317-002	TRANSISTOR	26
1	1006755-126	CAPACITOR	25
1	1006755-79	↕	24
9	1006755-134	↕	23
6	1006755-89	CAPACITOR	22
AR	1006757-13	WIRE, ELEC	21
1	1006750-60	RESISTOR	20
2	1006330-001	↕	19
1	1010604-50	↕	18
1	1010389-23	↕	17
1	1010389-113	↕	16
1	1010389-51	RESISTOR	15
1	2004928	SLEEVE, THERMAL	14
1	1006750-43	RESISTOR	13
1	1006750-39	↕	12
3	1006750-15	↕	11
1	1006750-1	↕	10
1	SEE NOTE 26	↕	9
1	SEE NOTE 26	RESISTOR	8
1	2004892	INSULATOR D	7
1	2004735-002	INSULATOR C	6
1	2004735-001	INSULATOR E	5
1	2004736	INSULATOR B	4
1	2004893	INSULATOR A	3
1	2003029-031	CONTROL CIRCUIT SUB ASSY	2
1	2003057-041	HEADER HOUSING ASSY	1

011 LIST OF MATERIALS

MIT INSTRUMENTATION LAB CAMBRIDGE MASS

UNL SS OTHERWISE SPECIFIED DIMENSIONS ARE IN INCHES TOLERANCES ON FRACTIONS DECIMALS ANGLES ±.02

DO NOT SCALE THIS DRAWING

MATERIAL

HEAT TREATMENT

FINAL FINISH

2003993 NEXT ASSY USED ON APPLICATION

MANNED SPACECRAFT CENTER HOUSTON TEXAS

DRAWN CHECKED APPROVED APPROVAL NASA APPROVAL

POWER SUPPLY MODULE A30 – 31 ASSEMBLY

CODE IDENT NO 80230 SIZE J NASA DRAWING NO 2003892

SCALE 4/1 WT SHEET 1 OF 1

2003892 A

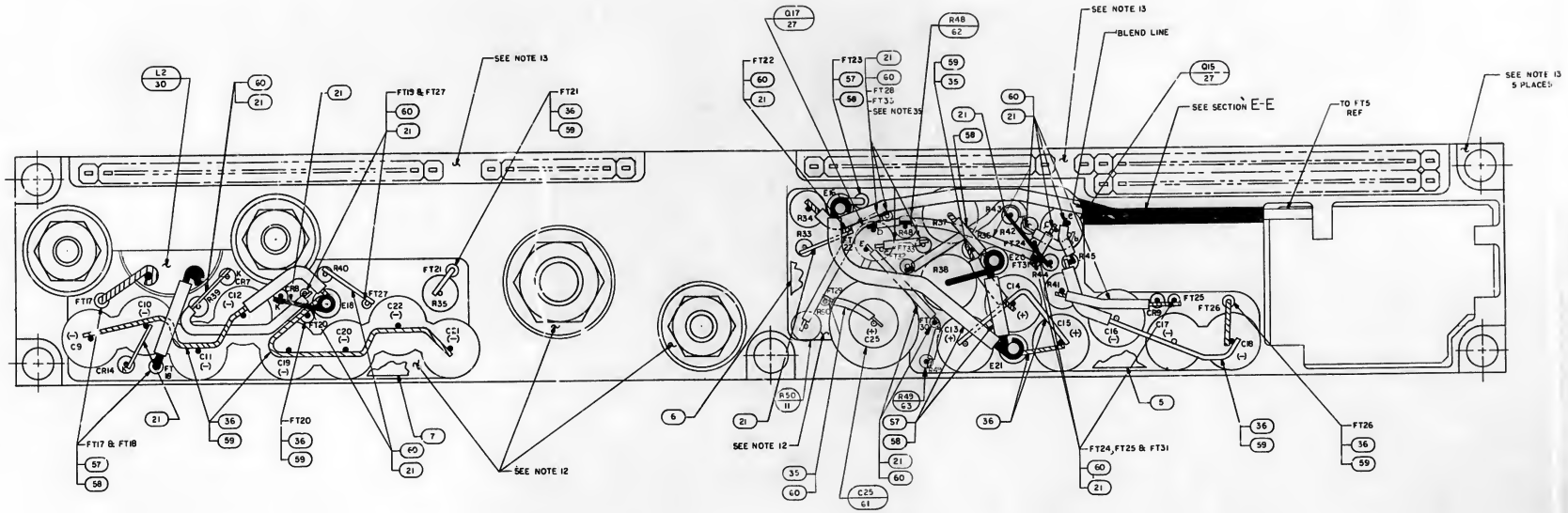

NOTES

1. INTERPRET DRAWING IN ACCORDANCE WITH STANDARDS PRESCRIBED BY MIL-D-70327
2. WELD PER ND1002005
3. UNLESS OTHERWISE SPECIFIED ALL WIRING SHALL BE IN ACCORDANCE WITH ND1002069
4. SOLDER PER ND1002071 USING SOLDER COMP SN60 FORM WIRE SOLID PER ND1002075 EXCEPT AS SHOWN
5. K DENOTES CATHODE SIDE OF DIODE
6. AR DENOTES AS REQUIRED
7. APPLY SILICONE GREASE, 1006879, TO INDICATED AREAS OF CR6, CR10 Q12 AND Q14
8. MOUNTING TORQUE FOR CR6 AND CR10 TO BE 25/30 INCH POUNDS
9. FIND NO.56 TO COVER SOLDER JOINT OF FIND NO.36 AND FIND NO.54
10. MOUNTING TORQUE FOR Q12 TO BE 15/30 INCH POUNDS
11. MOUNTING TORQUE FOR Q14 TO BE 13/15 INCH POUNDS
12. ENCAPSULATE PER ND1002002 EXCEPT PREHEAT MOLD 1 1/2 HOURS MIN AND CURE FOR 3 HRS MIN AT 200°±5°F. REMOVE FLASHING
13. INDICATED AREAS TO BE FREE OF ENCAPSULATION
14. STAKE FIND NO.10 THRU 20, 22, 23, 27, 29 THRU 33, 38, 61, 62, 63 & 64 PER ND1002009 METHOD C OR D
15. FT DENOTES FEED THRU
16. + DENOTES POSITIVE SIDE OF CAPACITOR
17. SEAL INSULATORS, CONTACTS AND FIND NO.37 TO HEADER PER ND1002004, TYPE VI
18. E DENOTES STAND-OFF
19. MARK .10/.08 HIGH WHITE CHARACTERS PER MD 1002019 AND ND1002122 TYPE II, CLASS 2 AND SERIALIZE PER ND1002023 USING INK 1006271-1
20. MARK .26/.24 HIGH WHITE CHARACTERS PER ND1002019 AND ND1002122 TYPE II, CLASS 2 USING INK 1006271-1
21. BLACK DOT & CROSS HATCHED WIRING INDICATES UPPER LEVEL WIRING
22. BLACK DOT & SOLID BLACK WIRING INDICATES SPECIAL LEVEL WIRING
23. WHITE DOT & CLEAR WIRING INDICATES LOWER LEVEL WIRING
24. MOUNTING TORQUE FOR FIND NO.37 TO BE 15/20 INCH OUNCES
25. ENCAPSULATE FIND NO. 2 IN FIND NO. 1 TO DIM. SHOWN PER ND1002009, METHOD F
26. THE VALUE OF THE FOLLOWING COMPONENTS TO BE DETERMINED AT ELECTRICAL TEST. R1 AND R2 TO BE SELECTED FROM APPROPRIATE CHART
27. STAKE WIRE IN PLACE PER ND1002004, TYPE VI
28. BACKGROUND TO BE RED USING MARKING INK 1006271-9
29. MARK .10/.08 HIGH WHITE PER ND1002019 & ND1002122 TYPE II, CLASS 2, USING INK 1006271-1. CENTRALIZE AS SHOWN
30. COMPLETED ASSEMBLY SHALL BE TESTED IN ACCORDANCE WITH AND SHALL MEET ALL REQUIREMENTS OF PS 2003892
31. ENCAPSULATE FIND NO.34 TO FIND NO.1 PER ND1002009, METHOD F
32. SEAL BOTTOM OF FIND NO.2 PER ND1002009 METHOD C OR D PRIOR TO ENCAPSULATION PER NOTE 25
33. BOND FIND NO.43 TO FIND NO.1 PER ND1002004 TYPE VI
34. COAT TOP AND END SURFACES OF FIND NO. 23 AND 24 PER ND1002187 TYPE II
35. FILL CAVITY FOR FT32 & FT33 PER ND1002009 METHOD C OR D

R1 AND R2	
PART NO.	VALUE
1006750-1	51
-2	56
-3	62
-4	68
-5	75
-6	82
-7	91
-8	100
-9	110
-10	120
-11	130
-12	150
-13	160
-14	180
-15	200
-16	220
-17	240
-18	270
-19	300
-20	330
-21	360
-22	390
-23	430
-24	470
1006750-25	510

SEE NOTE

SEE NOTE 2
CROSS SECT

POTT
BELO

2003892

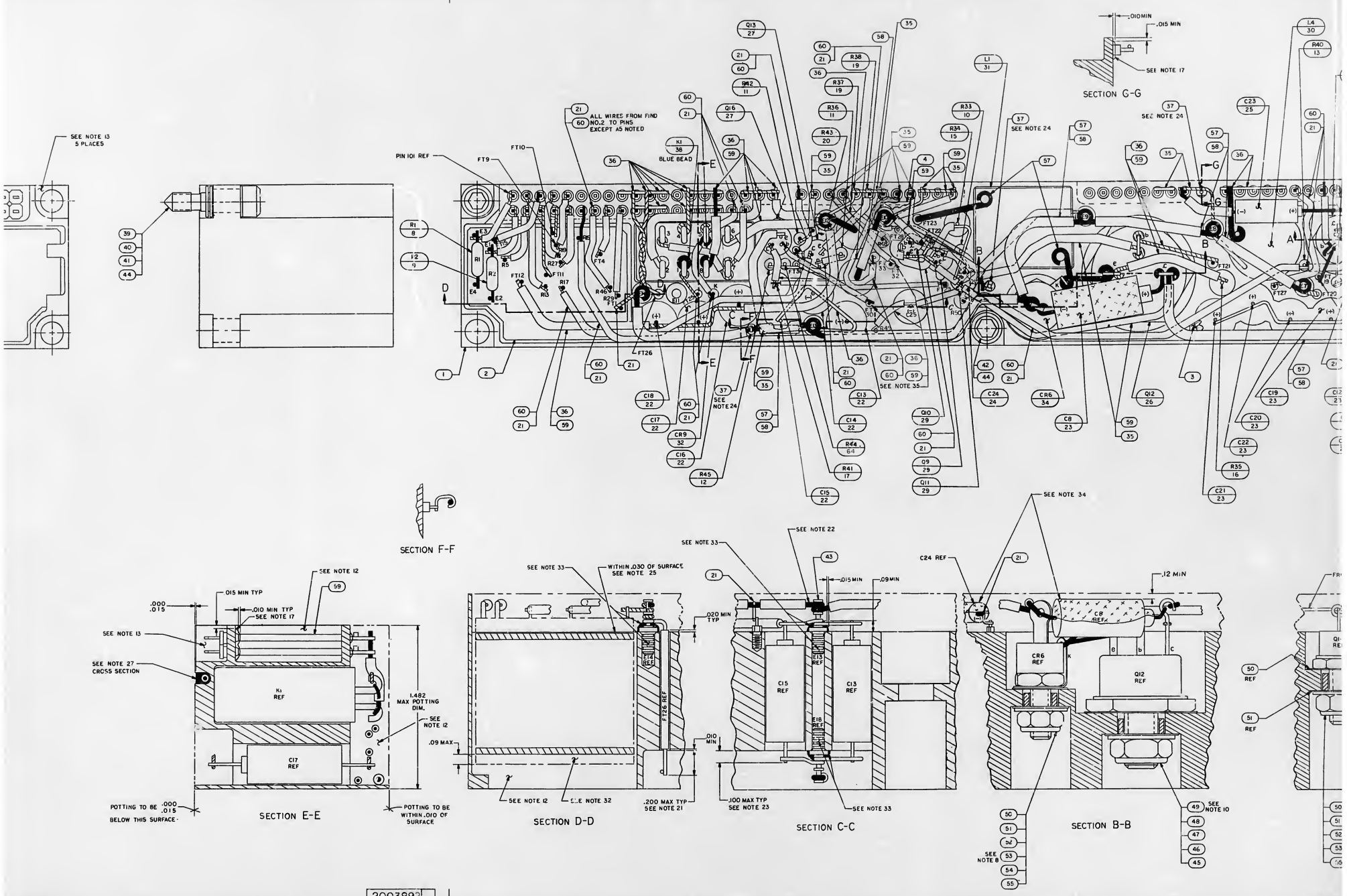
SEE NOTE 13 5 PLACES
ALL WIRES FROM FIND NO.2 TO PINS EXCEPT AS NOTED
PIN 101 REF
BLUE BEAD
SEE NOTE 24
SEE NOTE 35
SECTION G-G
SECTION F-F
SEE NOTE 12
SEE NOTE 17
SEE NOTE 13
SEE NOTE 27 CROSS SECTION
K1 REF
C17 REF
1.492 MAX POTTING DIM.
POTTING TO BE .000 .015 BELOW THIS SURFACE
POTTING TO BE WITHIN .010 OF SURFACE
SECTION E-E
SEE NOTE 33
WITHIN .030 OF SURFACE SEE NOTE 25
SEE NOTE 32
.200 MAX TYP SEE NOTE 21
SECTION D-D
SEE NOTE 22
.100 MAX TYP SEE NOTE 23
C15 REF
C13 REF
SECTION C-C
SEE NOTE 34
C24 REF
C8 REF
CR6 REF
Q12 REF
SEE NOTE 10
SEE NOTE 8
SECTION B-B

2003892

2003892

REVISIONS

SYM	DESCRIPTION

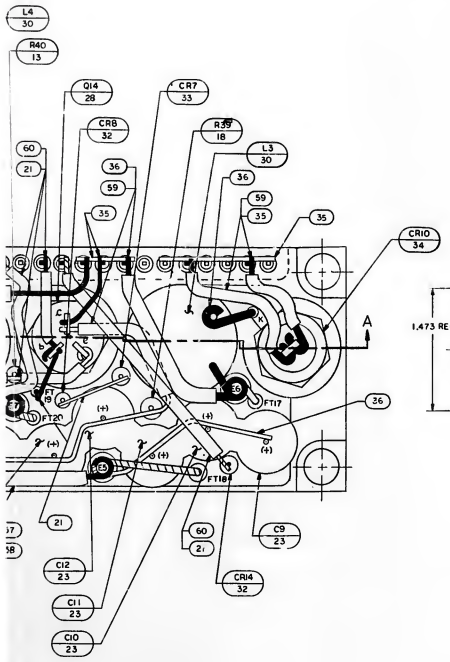

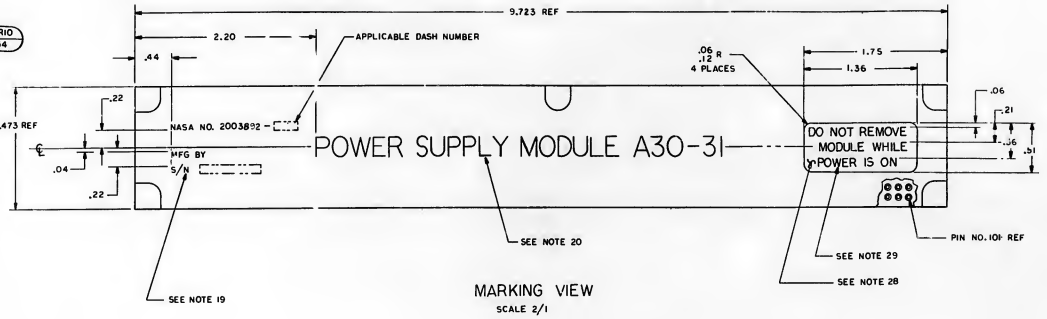

MARKING VIEW
SCALE 2/1

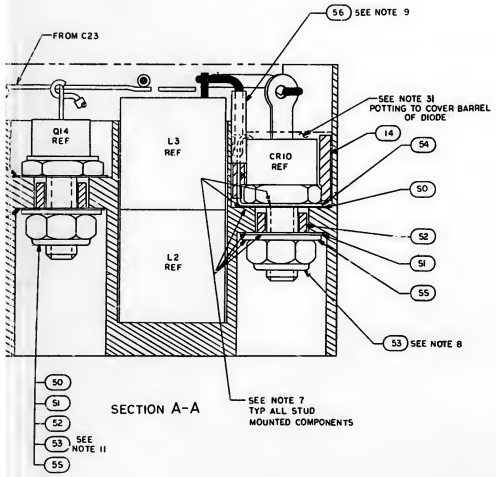

SECTION A-A

QTY REQD	PART OR IDENTIFYING NO	NOMENCLATURE OR DESCRIPTION	FIND NO
	2005971	SCHEMATIC	REF
1	1006750-28	RESISTOR	64
1	1006750-32	RESISTOR	63
1	1006788-4	RESISTOR	62
1	1006755-14	CAPACITOR	61
AR	1006776-22	INSULATION,SLEEVING	60
AR	1006776-20	INSULATION,SLEEVING	59
AR	1006776-18	INSULATION,SLEEVING	58
AR	QQ-W-343,TYPE S,18	WIRE,ELEC	57
AR	1006776-30	INSULATION,SLEEVING	56
3	1008071-004	WASHER,FLAT	55
2	2008013-5	TERMINAL LUG	54
3	MS21083B3	NUT,HEX,SELF-LOCKING	53
8	1008025-5	BUSHING,INSULATOR	52
3	1008024-1	WASHER,INSULATOR	51
3	1008024-2	WASHER,INSULATOR	50
1	MS21083B5	NUT,HEX,SELF-LOCKING	49
1	1008071-7	WASHER,FLAT	48
1	2008020-3	BUSHING,INSULATOR	47
1	1008024-5	WASHER,INSULATOR	46
1	1008024-6	WASHER,INSULATOR	45
5	2004984-003	WASHER,FLAT	44
14	1006708	TERMINAL,STUD	43
1	1004722-2	SCREW,CAPTIVE	42
4	MS16633-4015	RING,RETAINING,EXTERNAL "E"	41
4	2004984-001	WASHER,FLAT	40
4	1004579-1	SCREW,LOCKING	39
1	1006304-003	RELAY	38
3	2004039	TERMINAL THREADED	37
AR	1006757-21	WIRE,ELEC	36
AR	1006757-23	WIRE,ELEC	35
2	1006329	DIODE	34
1	2004112-001	DIODE	33
3	2004183-001	DIODE	32
1	1006328	INDUCTOR	31
3	1006327	INDUCTOR	30
1	2004722	TRANSISTOR,SELECTION LIST	29
1	1006363-001	TRANSISTOR	28
4	2004184-001	TRANSISTOR,POTTED	27
1	1006317-002	TRANSISTOR	26
1	1006755-126	CAPACITOR	25
1	1006755-79		24
9	1006755-134		23
6	1006755-89	CAPACITOR	22
AR	1006757-13	WIRE,ELEC	21
1	1006750-40	RESISTOR	20
2	1006330-001		19
1	1010604-50		18
1	1010389-23		17
1	1010389-13		16
1	1010389-51	RESISTOR	15
1	2004928	SLEEVE,THERMAL	14
1	1006750-43	RESISTOR	13
1	1006750-39		12
3	1006750-15		11
1	1006750-1		10
1	SEE NOTE 26		9
1	SEE NOTE 26	RESISTOR	8
1	2004892	INSULATOR D	7
1	2004735-002	INSULATOR C	6
1	2004735-001	INSULATOR C	5
1	2004736	INSULATOR B	4
1	2004893	INSULATOR A	3
1	2003029-031	CONTROL CIRCUIT SUB ASSY	2
1	2003057-021	HEADER HOUSING ASSY	1

LIST OF MATERIALS

MIT INSTRUMENTATION LAB
CAMBRIDGE, MASS.

UNLESS OTHERWISE SPECIFIED DIMENSIONS ARE IN INCHES
TOLERANCES ON
FRACTIONS DECIMALS ANGLES
±.02
DO NOT SCALE THIS DRAWING
MATERIAL
HEAT TREATMENT
FINAL FINISH

DRAWN
CHECKED
APPROVAL
APPROVAL
NASA APPROVAL
APPROVAL

2003993
NEXT ASSY
USED ON
APPLICATION

MANNED SPACECRAFT CENTER
HOUSTON, TEXAS

POWER SUPPLY MODULE
A30 – 31
ASSEMBLY

CODE IDENT NO 80230 | SIZE J | NASA DRAWING NO 2003892
SCALE 4/1 | WT | SHEET 1 OF 1

2003892

2003908 A

REVISIONS 20272

SYM	DESCRIPTION	DATE	APPROVAL
A	REVISED PER TDRR 23232 DR RC T CHK JCJ APPD BM	10/21/65	B. M. Smith

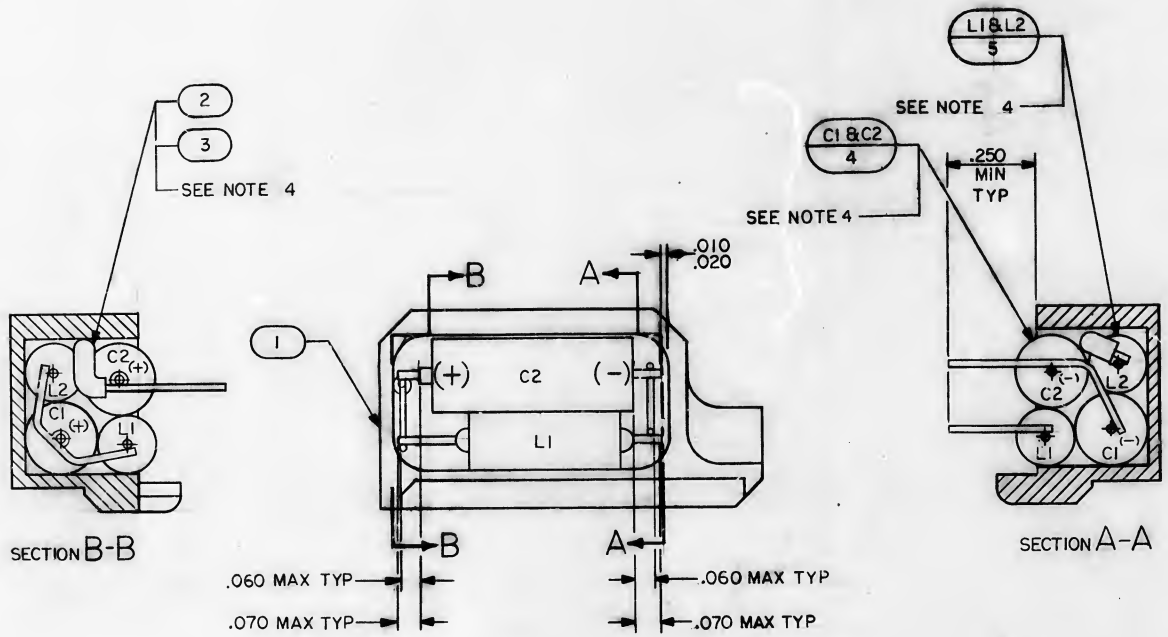

NOTES

1. INTERPRET DRAWING IN ACCORDANCE WITH STANDARDS PRESCRIBED BY MIL-D-70327
2. UNLESS OTHERWISE SPECIFIED, ALL WIRING SHALL BE IN ACCORDANCE WITH ND1002069
3. WELD PER ND1002005
4. STAKE FIND NO.2,3,4&5 TOGETHER & FIND NO.1 PER ND 1002004 TYPE V BEFORE WELDING
5. + DENOTES POSITIVE SIDE OF CAPACITOR
6. AR DENOTES AS REQUIRED
7. IDENTIFY WITH PART NO. PER ND 1002019

QTY REQD	PART OR IDENTIFYING NO.	NOMENCLATURE OR DESCRIPTION	FIND NO.
	2005902	SCHEMATIC	REF
2	1010406-7	COIL, RF, CHOKE	5
2	1006755-126	CAPACITOR, FIXED, ELECTROLYTIC	4
AR	1006776-22	SLEEVING, INSULATION	3
AR	1006757-8	WIRE, ELECTRICAL	2
1	2004909	BLOCK, COMPONENT	1

011 LIST OF MATERIALS

NEXT ASSY	USED ON
2003902	
APPLICATION	

UNLESS OTHERWISE SPECIFIED DIMENSIONS ARE IN INCHES
TOLERANCES ON
FRACTIONS ± DECIMALS ± ANGLES ±
DO NOT SCALE THIS DRAWING
MATERIAL
HEAT TREATMENT
FINAL FINISH

MIT INSTRUMENTATION LAB
CAMBRIDGE, MASS
DWG NO CONTRACT
DRAWN J. P. Powell DATE 12 MAY 65
CHECKED Bloger 1 June 65
APPROVAL 2 June 65
APPROVAL Lee C Hall 21 June 65
NASA APPROVAL 4/22/66
MIT APPROVAL 22 June 65

MANNED SPACECRAFT CENTER
HOUSTON, TEXAS

DECODING CIRCUIT ASSEMBLY
INDICATOR DRIVER MODULE
AGC DSKY

CODE IDENT NO.	SIZE	NASA DRAWING NO.
80230	C	2003908

SCALE 4/1 WT SHEET 1 OF 1

2003908 —

REVISIONS 20272			
SYM	DESCRIPTION	DATE	APPROVAL

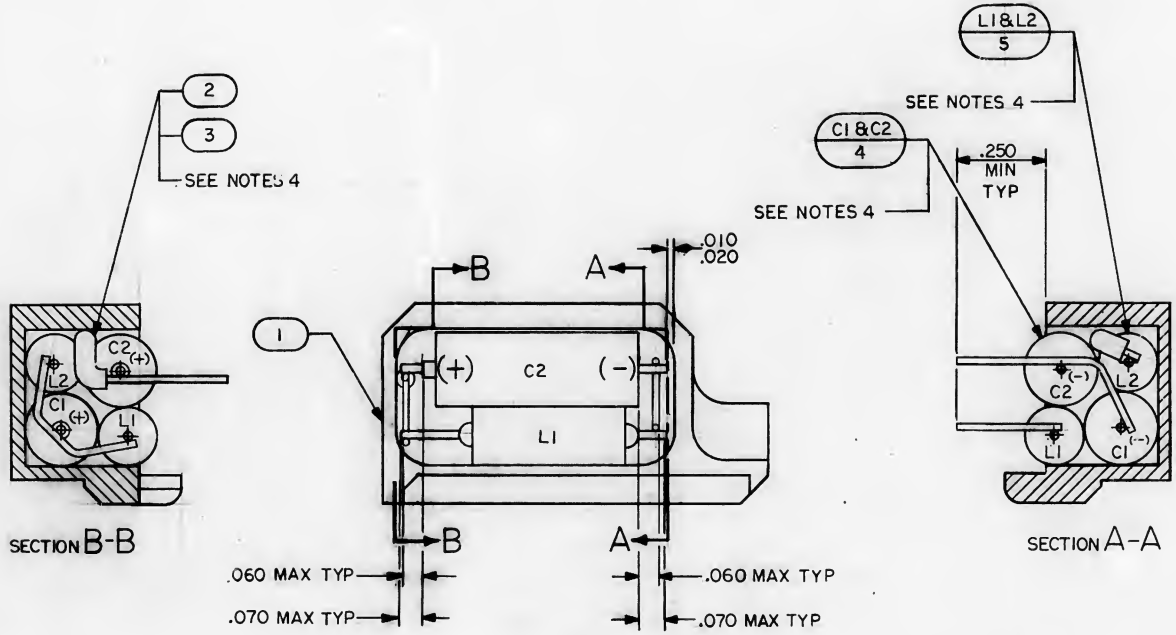

NOTES

1. INTERPRET DRAWING IN ACCORDANCE WITH STANDARDS PRESCRIBED BY MIL-D-70327
2. UNLESS OTHERWISE SPECIFIED, ALL WIRING SHALL BE IN ACCORDANCE WITH ND1002069
3. WELD PER ND1002005
4. STAKE FIND NO.2,3,4 & 5 TOGETHER & FIND NO.1 PER ND 1002009 METHOD C OR D BEFORE WELDING
5. + DENOTES POSOTIVE SIDE OF CAPACITOR
6. AR DENOTES AS REQUIRED
7. IDENTIFY WITH DRAWING NO & REVISION PER ND 1002019

QTY REQD	PART OR IDENTIFYING NO.	NOMENCLATURE OR DESCRIPTION	FIND NO.
	2005902	SCHEMATIC	REF
2	1010406-7	COIL, RF, CHOKE	5
2	1006755-126	CAPACITOR, FIXED, ELECTROLYTIC	4
AR	1006776-22	SLEEVING, INSULATION	3
AR	1006757-8	WIRE, ELECTRICAL	2
1	2004909	BLOCK, COMPONENT	1

011 LIST OF MATERIALS

2003902	
NEXT ASSY	USED ON
APPLICATION	

UNLESS OTHERWISE SPECIFIED
DIMENSIONS ARE IN INCHES
TOLERANCES ON
FRACTIONS ± DECIMALS ± ANGLES ±
DO NOT SCALE THIS DRAWING
MATERIAL
HEAT TREATMENT
FINAL FINISH

MIT INSTRUMENTATION LAB
CAMBRIDGE, MASS
DWG NO CONTRACT

DRAWN J.P. Gerard DATE 12 MAY 65
CHECKED Roger Sewell 6-4
APPROVAL G. Hendrickson 1 June 65
APPROVAL Ekan C Hall 21 June 65
NASA APPROVAL 6/22/65
MIT APPROVAL 22 June 65

MANNED SPACECRAFT CENTER
HOUSTON, TEXAS

DECODING CIRCUIT ASSEMBLY
INDICATOR DRIVER MODULE
AGC DSKY

CODE IDENT NO.	SIZE	NASA DRAWING NO.
80230	C	2003908
SCALE 4/1	WT	SHEET 1 OF 1

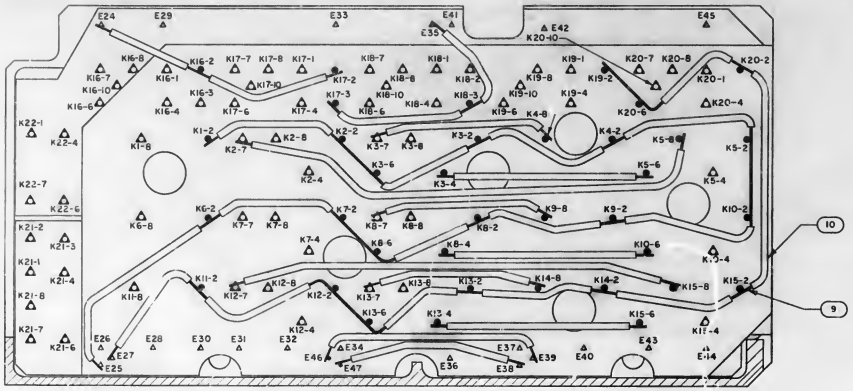

SECTION B-B
SHOWN WITH LOWER LEVEL WIRING REMOVED

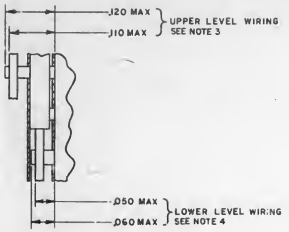

DETAIL A
SCALE 10/1

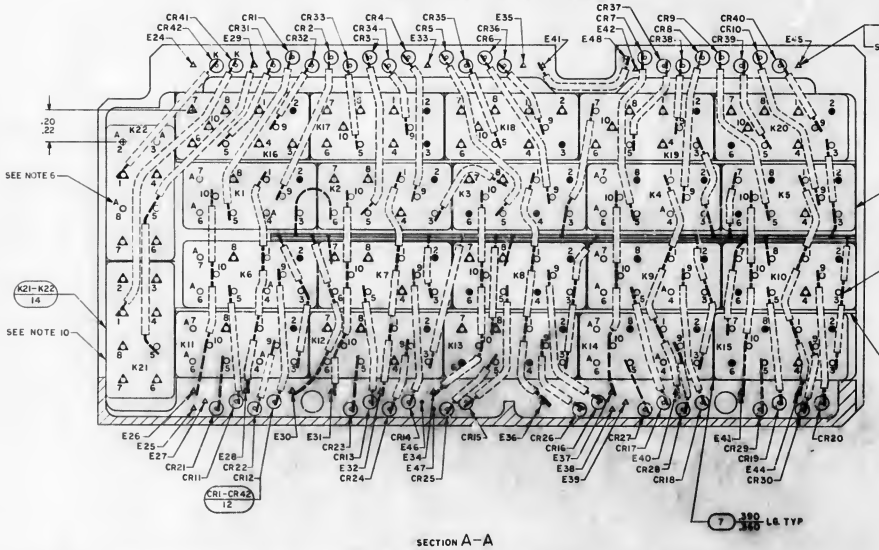

SECTION A-A
SHOWN WITH FIRST LEVEL INSULATOR REMOVED

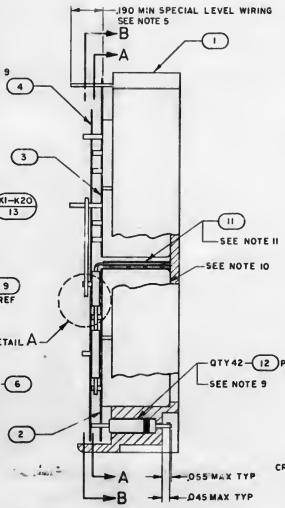

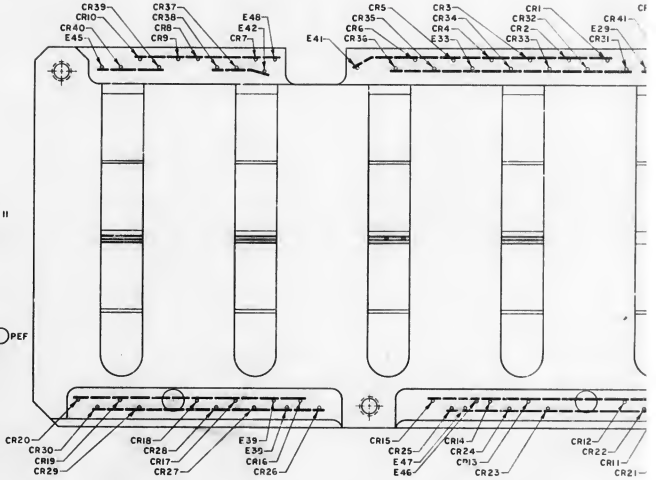

CATHODE END OF CR1 THRU CR40 LOCATED THIS SIDE

NOTES

1. INTERPRET DRAWING IN ACCORDANCE WITH STANDARDS PRESCRIBED BY MIL-D-70327
2. AR DENOTES AS REQUIRED
3. BLACK DOT AND SINGLE SOLID LEADS INDICATE UPPER LEVEL WIRING
4. WHITE DOT AND SINGLE DOTTED LEADS INDICATE LOWER LEVEL WIRING
5. △ INDICATES LEADS TO BE CUT FOR SPECIAL LEVEL WIRING
6. TRIM UNUSED LEADS MARKED A OF FIND NO.13 & 14 .010/.030 FROM CASE
7. WELD PER ND1002005
8. UNLESS OTHERWISE SPECIFIED, ALL WIRING SHALL BE IN ACCORDANCE WITH ND1002069
9. STAKE FIND NO.8 & 12 TO FIND NO.1 PER ND1002009 METHOD C OR D
10. BOND FIND NO.13 &14 TO FIND NO.1 PER ND1002004 TYPE IV
11. REMOVE PROTECTIVE LINER FROM FIND NO.11 AND ASSEMBLE TO K6 THRU K10 AS SHOWN
12. K DENOTES CATHODE SIDE OF DIODE
13. IDENTIFY WITH PART NO. PER ND1002019

2003910 A F-2

2003902
NEXT ASSY

SYM	DESCRIPTION	DATE	APPROVAL
A	REVISED PER TDRR 22162 DR.		

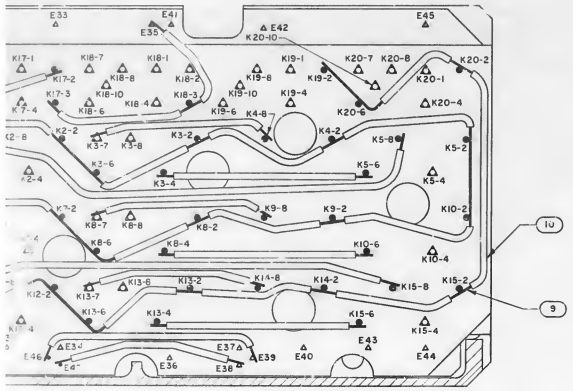

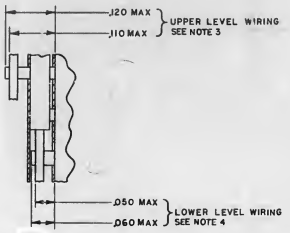

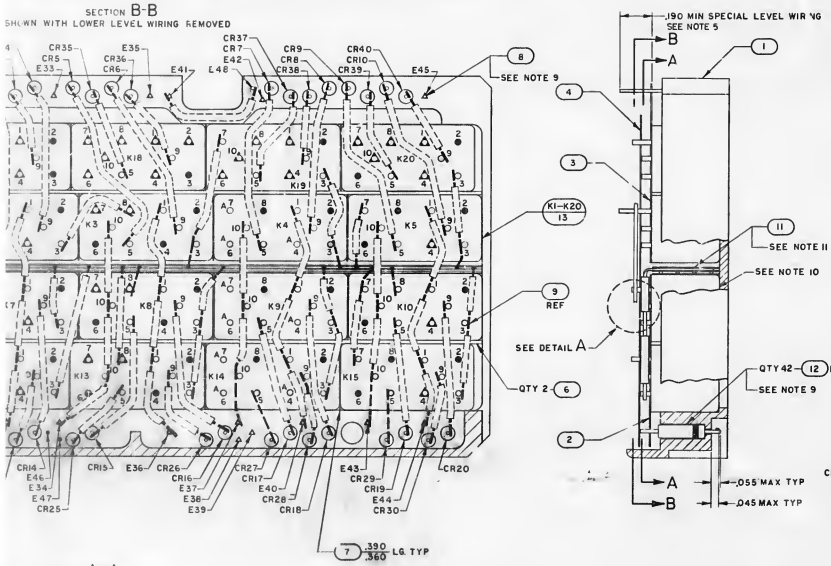

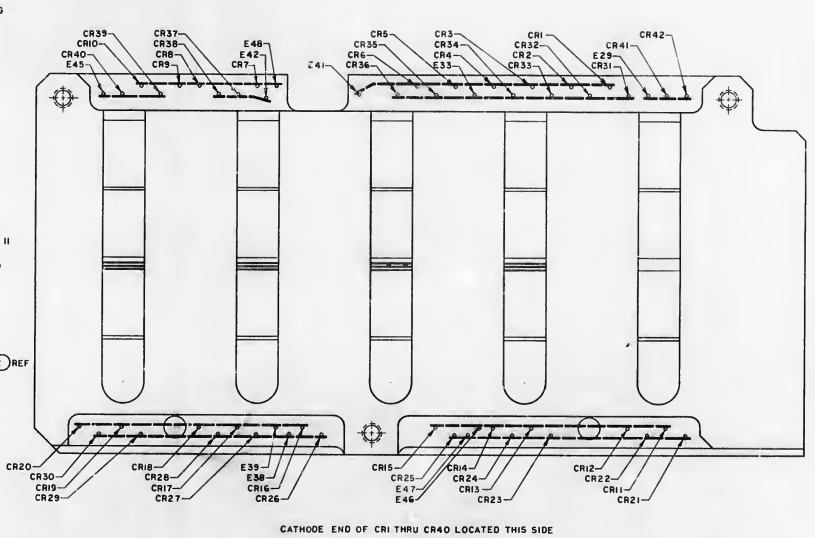

QTY REQD	PART OR IDENTIFYING NO	NOMENCLATURE OR DESCRIPTION	FIND NO
	2005902	SCHEMATIC	REF
2	1010784-9	RELAY	14
20	1006282-2	RELAY	13
42	2004103-001	DIODE	12
1	2003911	MATRIX ASSEMBLY	11
AR	1006776-22	INSULATION, SLEEVING ELECTRICAL	10
AR	1006757-1	WIRE, ELECTRICAL, .010 X .020	9
AR	1006757-8	WIRE, ELECTRICAL, .020 DIA	8
AR	1006806-24	INSULATION TAPE, ELECTRICAL	7
2	2004951	BOARD, INSULATOR	6
1	2004917	INSULATOR	5
1	2004916	INSULATOR	4
1	2004952	INSULATOR, B	3
1	2004953	INSULATOR, A	2
1	2004908	BLOCK, COMPONENT RELAY	1

LIST OF MATERIALS

MIT INSTRUMENTATION LAB CAMBRIDGE 39, MASS.	MANNED SPACECRAFT CENTER HOUSTON, TEXAS
DRAWN	RELAY CIRCUIT ASSEMBLY INDICATOR DRIVER MODULE AGC DSKY
CHECKED	
APPROVAL	
APPROVAL	
NASA APPROVAL	CODE IDENT NO. 80230 SIZE J NASA DRAWING NO 2003910
MIT APPROVAL	SCALE 4/1 WT SHEET 1 OF 1
MIT APPROVAL	

UNLESS OTHERWISE SPECIFIED DIMENSIONS ARE IN INCHES TOLERANCES ON FRACTIONS ± DECIMALS ± ANGLES ± DO NOT SCALE THIS DRAWING MATERIAL HEAT TREATMENT FINAL FINISH

2003902 NEXT ASSY USED ON APPLICATION

2003910 A

F-2/2

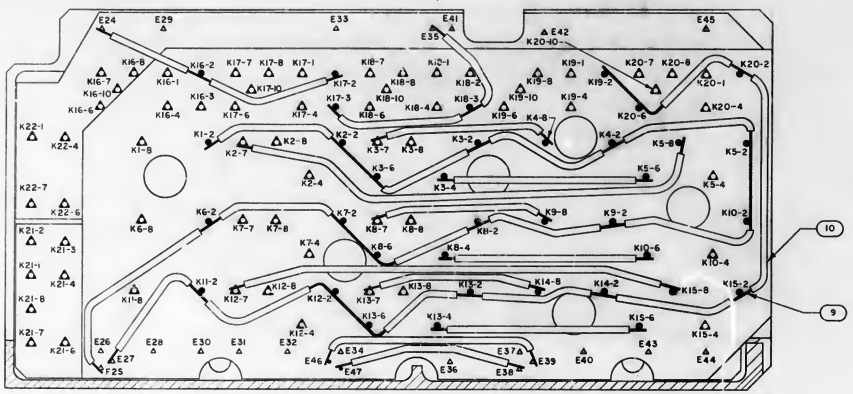

SECTION B-B
SHOWN WITH LOWER LEVEL WIRING REMOVED

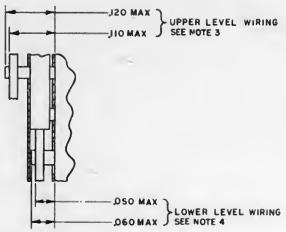

DETAIL A
SCALE 10/1

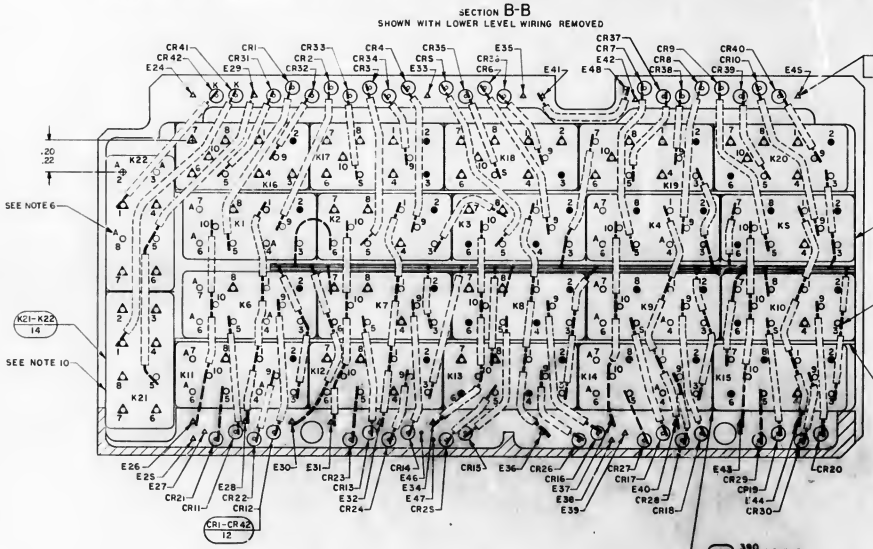

SECTION A-A
SHOWN WITH FIRST LEVEL INSULATOR REMOVED

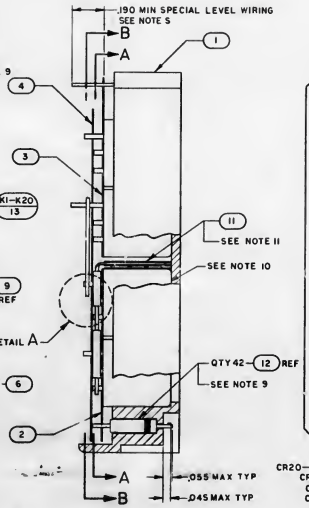

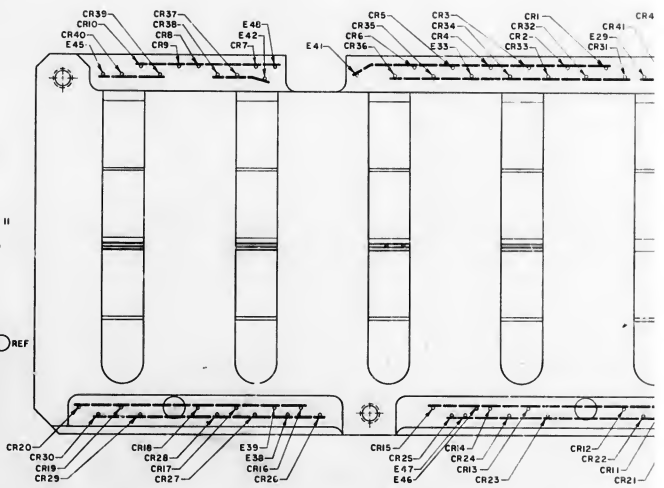

CATHODE END OF CR1 THRU CR40 LOCATED THIS SIDE

NOTES

1. INTERPRET DRAWING IN ACCORDANCE WITH STANDARDS PRESCRIBED BY MIL-D-70327
2. AR DENOTES AS REQUIRED
3. BLACK DOT AND SINGLE SOLID LEADS INDICATE UPPER LEVEL WIRING
4. WHITE DOT AND SINGLE DOTTED LEADS INDICATE LOWER LEVEL WIRING
5. △ INDICATES LEADS TO BE CUT FOR SPECIAL LEVEL WIRING
6. TRIM UNUSED LEADS MARKED A OF FIND NO.13 & 14 .010/.030 FROM CASE
7. WELD PER ND1002005
8. UNLESS OTHERWISE SPECIFIED, ALL WIRING SHALL BE IN ACCORDANCE WITH ND1002069
9. STAKE FIND NO.8 & 12 TO FIND NO.1 PER ND1002009 METHOD C OR D
10. BOND FIND NO.13 & 14 TO FIND NO.1 PER ND1002004 TYPE II
11. REMOVE PROTECTIVE LINER FROM FIND NO.11 AND ASSEMBLE TO K6 THRU K10 AS SHOWN
12. K DENOTES CATHODE SIDE OF DIODE
13. IDENTIFY WITH PART NO. PER ID002019

2003910 B

2003902
NEXT ASSY
APPLICATE

REVISIONS			
SYM	DESCRIPTION	DATE	APPROVAL
A	REVISED PER TDRR 22162 DR J. Frank CHK J. Gill		
B	REVISED PER TDRR 23126 DR R. Fisher CHK		

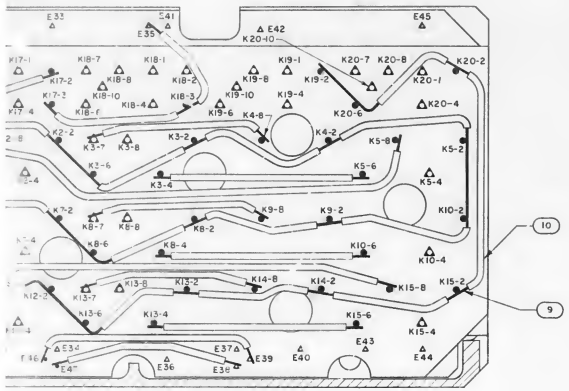

SECTION B-B
SHOWN WITH LOWER LEVEL WIRING REMOVED

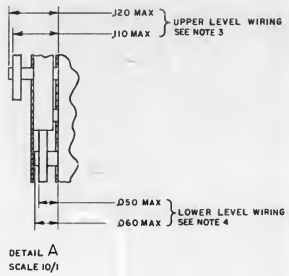

DETAIL A
SCALE 10/1

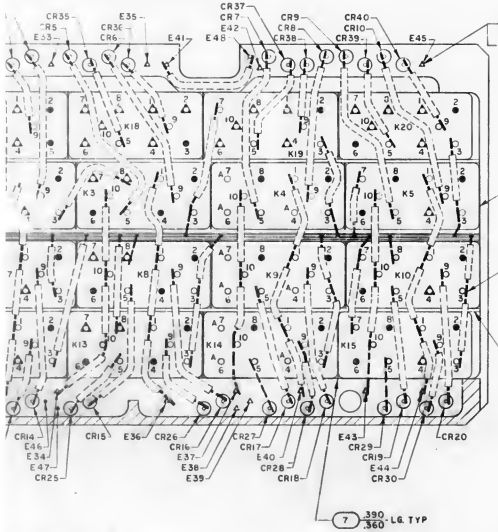

SECTION A-A
WITH FIRST LEVEL INSULATOR REMOVED

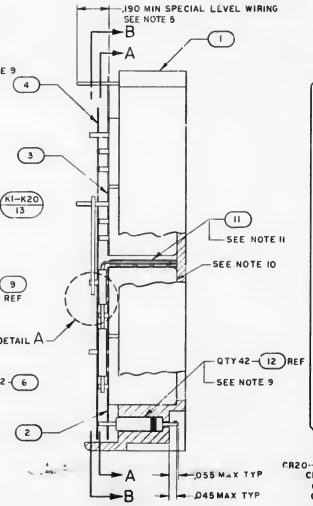

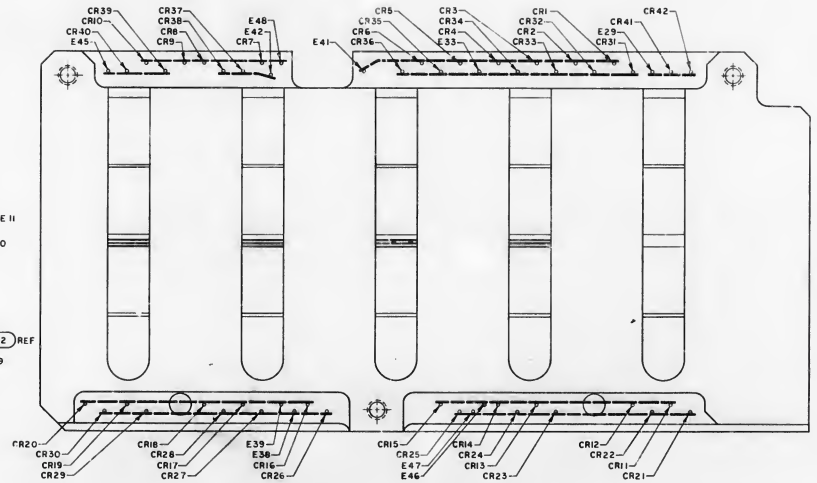

CATHODE END OF CR1 THRU CR40 LOCATED THIS SIDE

QTY REQD	PART OR IDENTIFYING NO	NOMENCLATURE OR DESCRIPTION	FIND NO
	2005902	SCHEMATIC	REF
2	1010784-9	RELAY	14
20	1006282-2	RELAY	13
42	2004157-001	DIODE	12
1	2003911	MATRIX ASSEMBLY	11
AR	1006776-22	INSULATION, SLEEVING ELECTRICAL	10
AR	1006757-1	WIRE, ELECTRICAL, .010 X .020	9
AR	1006757-8	WIRE, ELECTRICAL, .020 DIA	8
AR	1006806-24	INSULATION TAPE, ELECTRICAL	7
2	2004951	BOARD, INSULATOR	6
~~1~~	~~2004917~~	~~INSULATOR~~	~~5~~
1	2004916	INSULATOR	4
1	2004952	INSULATOR, B	3
1	2004933	INSULATOR, A	2
1	2004908	BLOCK, COMPONENT RELAY	1

011 LIST OF MATERIALS

2003902		
NEXT ASSY	USED ON	
APPLICATION		

UNLESS OTHERWISE SPECIFIED DIMENSIONS ARE IN INCHES
TOLERANCES ON
FRACTIONS ± DECIMALS ± ANGLES ±
DO NOT SCALE THIS DRAWING
MATERIAL
HEAT TREATMENT
FINAL FINISH

MIT INSTRUMENTATION LAB Cambridge Mass.
DESIGN DATE
CHECKED
APPROVAL
APPROVAL
NASA APPROVAL
MIT APPROVAL
SPT APPROVAL

MANNED SPACECRAFT CENTER
HOUSTON, TEXAS

RELAY CIRCUIT ASSEMBLY
INDICATOR DRIVER MODULE
AGC DSKY

CODE IDENT NO. 80230 | SIZE J | NASA DRAWING NO. 2003910
SCALE 4/1 | WT | SHEET 1 OF 1

2003910 B

2003910 E

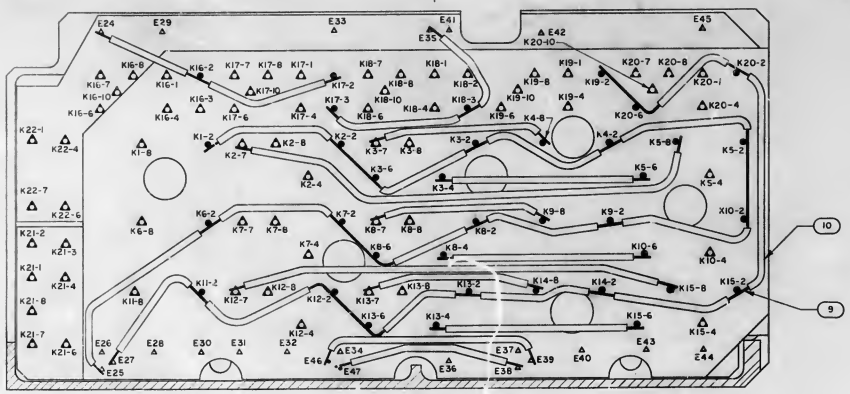

SECTION B-B
SHOWN WITH LOWER LEVEL WIRING REMOVED

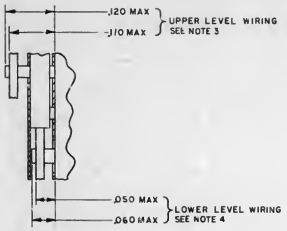

DETAIL A
SCALE 10/1

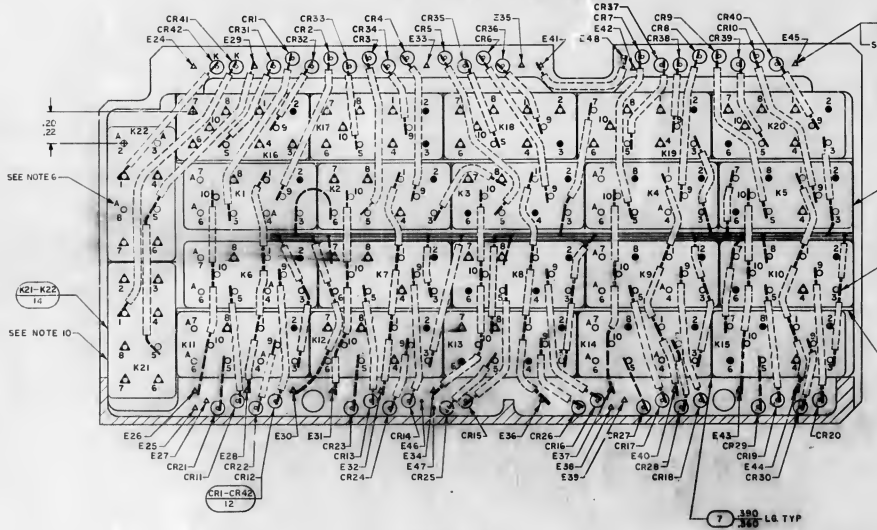

SECTION A-A
SHOWN WITH FIRST LEVEL INSULATOR REMOVED

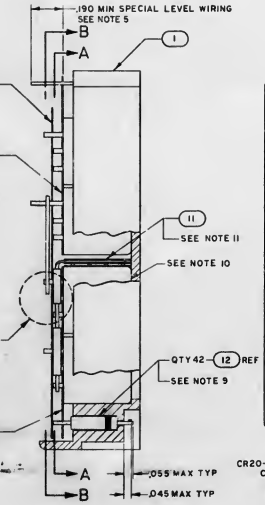

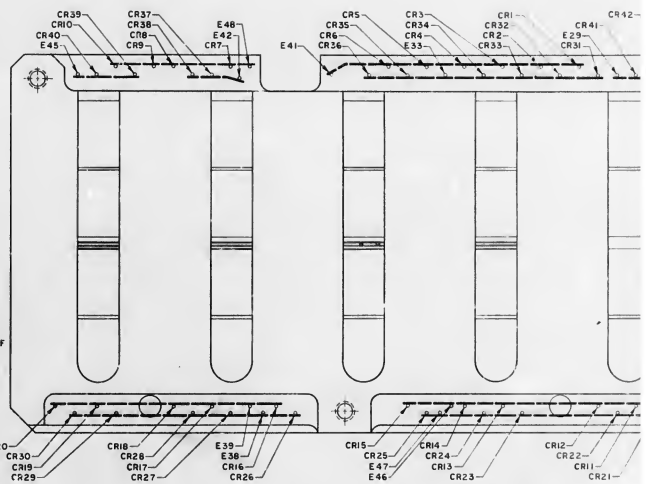

CATHODE END OF CR1 THRU CR40 LOCATED THIS SIDE

NOTES

1. INTERPRET DRAWING IN ACCORDANCE WITH STANDARDS PRESCRIBED BY MIL-D-70327
2. AP DENOTES AS REQUIRED
3. BLACK DOT AND SINGLE SOLID LEADS INDICATE UPPER LEVEL WIRING
4. WHITE DOT AND SINGLE DOTTED LEADS INDICATE LOWER LEVEL WIRING
5. △ INDICATES LEADS TO BE CUT FOR SPECIAL LEVEL WIRING
6. TRIM UNUSED LEADS MARKED A OF FIND NO.13 & 14 .010/.030 FROM CASE
7. WELD PER ND1002005
8. UNLESS OTHERWISE SPECIFIED, ALL WIRING SHALL BE IN ACCORDANCE WITH ND1002069
9. STAKE FIND NO.8 & 12 TO FIND NO.1 PER ND1002009 METHOD C OR D
10. BOND FIND NO.13 & 14 TO FIND NO.1 PER ND1002004 TYPE V
11. REMOVE PROTECTIVE LINER FROM FIND NO.11 AND ASSEMBLE TO K6 THRU K10 AS SHOWN
12. ▼ DENOTES CATHODE SIDE OF DIODE
13. [illegible] WITH PART NO. PER ND1002019

2003952	
2003902	
NEXT ASSY	
APPLICATION	

2003910 C

2003910 C

SYM	DESCRIPTION	DATE	APPROVAL
A	REVISED PER TORR 22162 DR J Bond CHK J Bond		
B	REVISED PER TORR 23126 DR F Bailey CHK JJ		
C	REVISED PER TORR 26765 DR F Bailey CHK JJ		

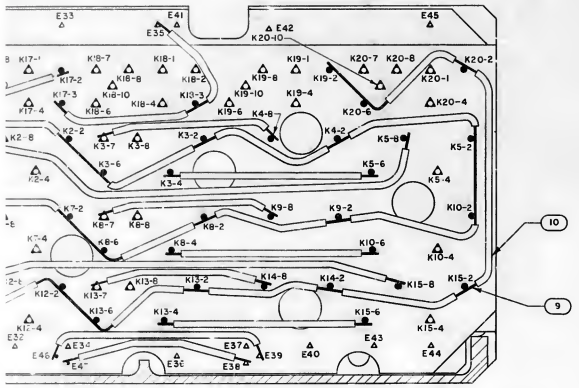

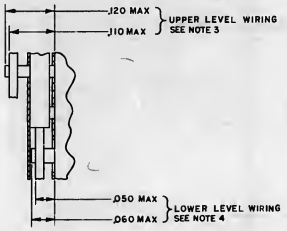

DETAIL A
SCALE 10/1

SECTION B-B
SHOWN WITH LOWER LEVEL WIRING REMOVED

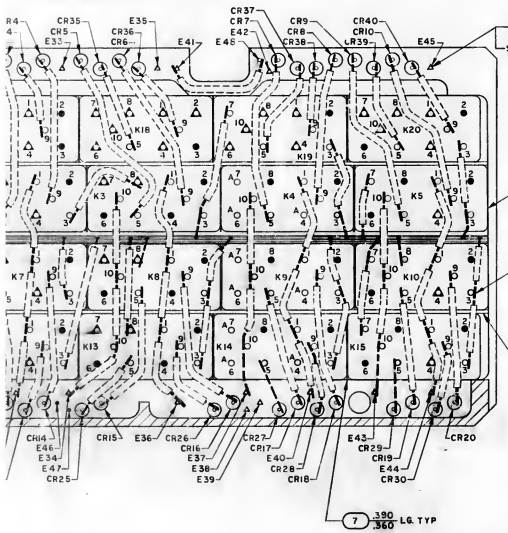

SECTION A-A
WITH FIRST LEVEL INSULATOR REMOVED

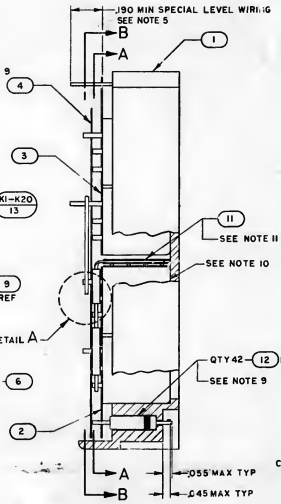

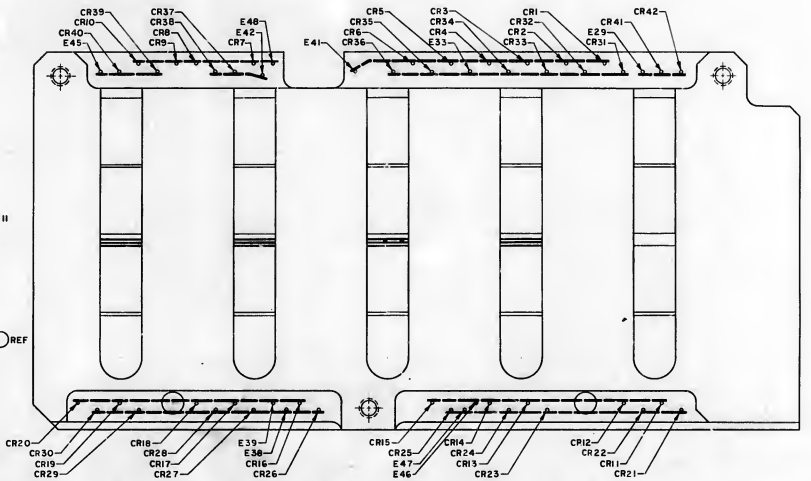

CATHODE END OF CR1 THRU CR40 LOCATED THIS SIDE

QTY REQD	PART OR IDENTIFYING NO	NOMENCLATURE OR DESCRIPTION	FIND NO.
	2003902	SCHEMATIC	REF
2	1010784-11	RELAY	12
20	1006282-2	RELAY	10
42	2004103-001	DIODE	12
1	2003911	MATRIX ASSEMBLY	11
AR	1006776-22	INSULATION, SLEEVING ELECTRICAL	10
AR	1006757-1	WIRE, ELECTRICAL, .010 X .020	9
AR	1006757-8	WIRE, ELECTRICAL, .020 DIA	8
AR	1006806-24	INSULATION TAPE, ELECTRICAL	7
2	2004951	BOARD, INSULATOR	6
~~1~~	~~2004912~~	~~INSULATOR~~	~~5~~
1	2004916	INSULATOR	4
1	2004952	INSULATOR, B	3
1	2004933	INSULATOR, A	2
1	2004908	BLOCK, COMPONENT RELAY	1
011		LIST OF MATERIALS	

2003952		UNLESS OTHERWISE SPECIFIED DIMENSIONS ARE IN INCHES TOLERANCES ON FRACTIONS ± DECIMALS ± ANGLES ±	INSTRUMENTATION LAB Cambridge, Mass.
2003902		DO NOT SCALE THIS DRAWING	MANNED SPACECRAFT CENTER HOUSTON, TEXAS
NEXT ASSY	USED ON	MATERIAL	RELAY CIRCUIT ASSEMBLY INDICATOR DRIVER MODULE AGC DSKY
APPLICATION		HEAT TREATMENT	CODE IDENT NO 80230 · SIZE J · NASA DRAWING NO 2003910
		FINAL FINISH	SCALE 4/1 · SHEET 1 OF 1

DRAWN · CHECKED · APPROVAL · APPROVAL · NASA APPROVAL · MIT APPROVAL · MIT APPROVAL

2003910 C

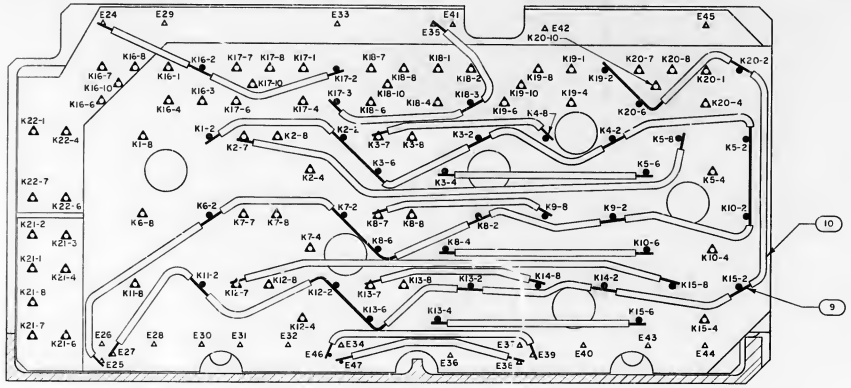

SECTION B-B
SHOWN WITH LOWER LEVEL WIRING REMOVED

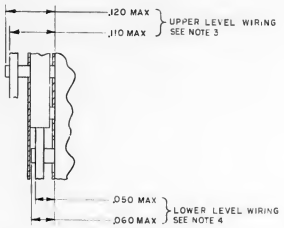

DETAIL A
SCALE 10/1

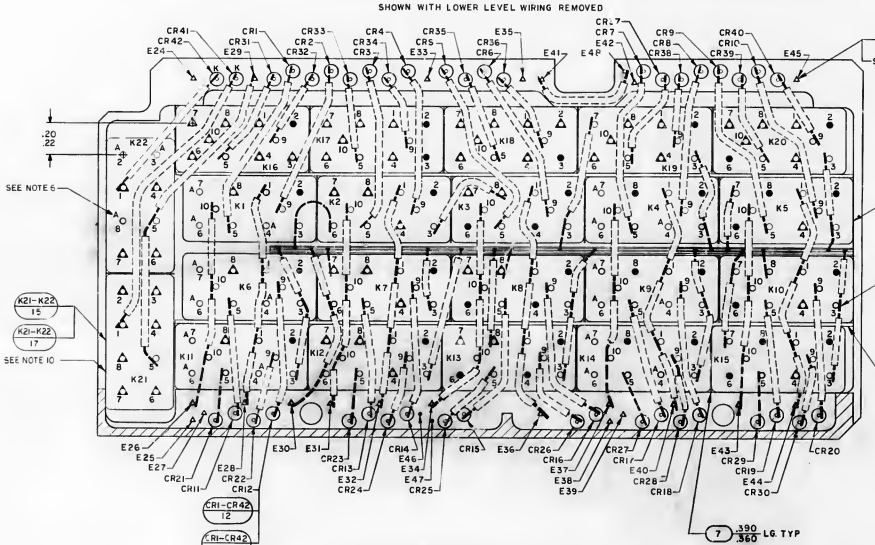

SECTION A-A
SHOWN WITH FIRST LEVEL INSULATOR REMOVED

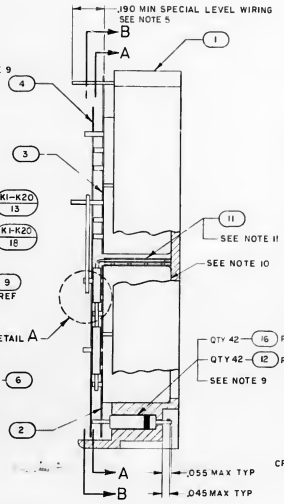

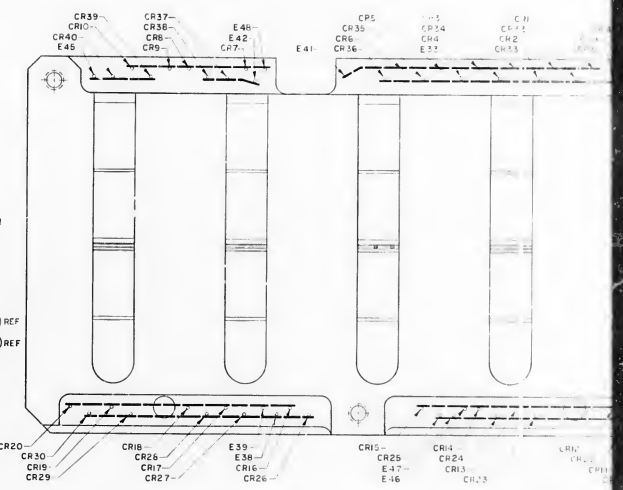

CATHODE END OF CR1 THRU CR40 LOCATED THIS SIDE

NOTES

1. INTERPRET DRAWING IN ACCORDANCE WITH STANDARDS PRESCRIBED BY MIL-D-70327
2. AR DENOTES AS REQUIRED
3. BLACK DOT AND SINGLE SOLID LEADS INDICATE UPPER LEVEL WIRING
4. WHITE DOT AND SINGLE DOTTED LEADS INDICATE LOWER LEVEL WIRING
5. △ INDICATES LEADS TO BE CUT FOR SPECIAL LEVEL WIRING
6. TRIM UNUSED LEADS MARKED A OF FIND NO.13,15,17 & 18 .010/.030 FROM CASE
7. WELD PER ND1002005
8. UNLESS OTHERWISE SPECIFIED, ALL WIRING SHALL BE IN ACCORDANCE WITH ND1002069
9. STAKE FIND NO.8,2&6 TO FIND NO.1 PER ND1002009 METHOD C OR D.
10. BOND FIND NO.13, 5,17&18 TO FIND NO.1 PER ND1002004 TYPE I.
11. REMOVE PROTECTIVE LINER FROM FIND NO.11 AND ASSEMBLE TO K6 THRU K10 AS SHOWN
12. K DENOTES CATHODE SIDE OF DIODE
13. IDENTIFY WITH PART NO. PER ND1002019
14. FIND NO 8 SHALL BE 2004688-1 OR 2004688-2, EXCEPT NOT BOTH IN A GIVEN ASSEMBLY.

F1/2

2003910 D

2003910 D

REVISIONS				
SYM	ZONE	REVISION DESCRIPTION	DATE	APPROVAL
A		REVISED PER TORR 22162 DR R. Ford CHK J. Gill RA	4/66	
B		REVISED PER TORR 23126 DR R. Ford CHK JW 0.7	4/66	
C		REVISED PER TORR 26765 DR R. Ford CHK JW 0.7	3/66	
D		REVISED PER TORR 32580 DR R. F. CHK	2/67	

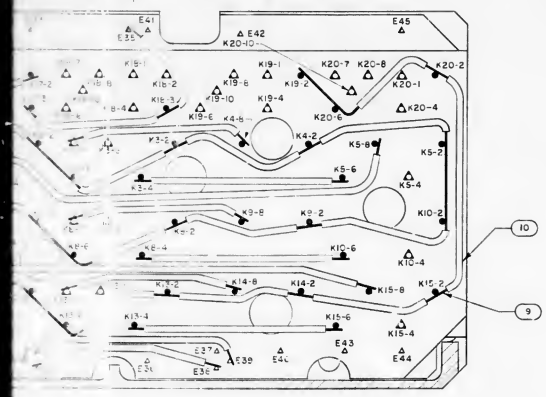

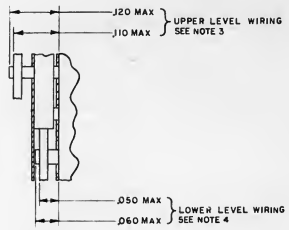

DETAIL A
SCALE 10/1

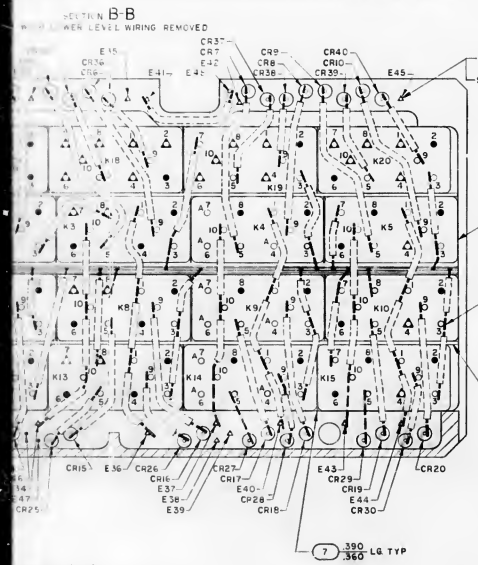

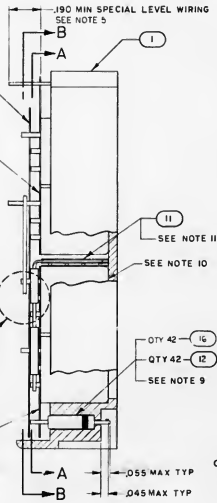

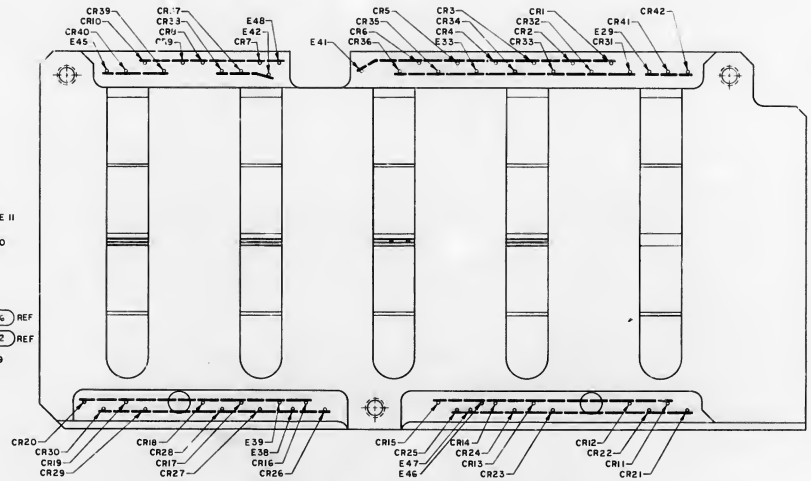

CATHODE END OF CR1 THRU CR40 LOCATED THIS SIDE

QTY REQD	QTY REQD	PART OR IDENTIFYING NO	NOMENCLATURE OR DESCRIPTION	ITEM NO
021	011		LIST OF MATERIALS	
20	—	SEE NOTE 14	RELAY	18
2	—	2004680-2	RELAY	17
—	X	2005902	SCHEMATIC	REF
X	—	2005940	SCHEMATIC	REF
42	—	2004183-001	DIODE	16
—	2	1010784-11	RELAY	15
—	2	1010794-9	RELAY	14
—	20	1006282-2	RELAY	13
—	42	2004103-001	DIODE	12
1	1	2003911-011	MATRIX ASSEMBLY	11
AR	AR	1006776-22	INSULATION, SLEEVING ELECTRICAL	10
AR	AR	1006757-1	WIRE, ELECTRICAL, .010 X .020	9
AR	AR	1006757-8	WIRE, ELECTRICAL, .020 DIA	8
AR	AR	1006806-24	INSULATION TAPE, ELECTRICAL	7
2	2	2004951	BOARD, INSULATOR	6
1	1	2004917	INSULATOR	5
1	1	2004916	INSULATOR	4
1	1	2004952	INSULATOR, B	3
1	1	2004933	INSULATOR, A	2
1	1	2004908	BLOCK, COMPONENT RELAY	1

2003952	
2003902	
NEXT ASSY	USED ON

APPLICATION

UNLESS OTHERWISE SPECIFIED DIMENSIONS ARE IN INCHES
TOLERANCES ON
FRACTIONS DECIMALS ANGLES
DO NOT SCALE THIS DRAWING
MATERIAL
HEAT TREATMENT
FINAL FINISH

BITT INSTRUMENTATION LAB
DRAWN R. Ford DATE 12/7/65
CHECKED
APPROVAL
APPROVAL Ellen C. Ball 12 Dec 65
NASA APPROVAL
MIT APPROVAL
MIT APPROVAL

MANNED SPACECRAFT CENTER
HOUSTON, TEXAS

RELAY CIRCUIT ASSEMBLY
INDICATOR DRIVER MODULE
AGC DSKY

CODE IDENT NO. 80230 J
NASA DRAWING NO. 2003910
SCALE 4/1
WT
SHEET 1 OF 1

2003910 D

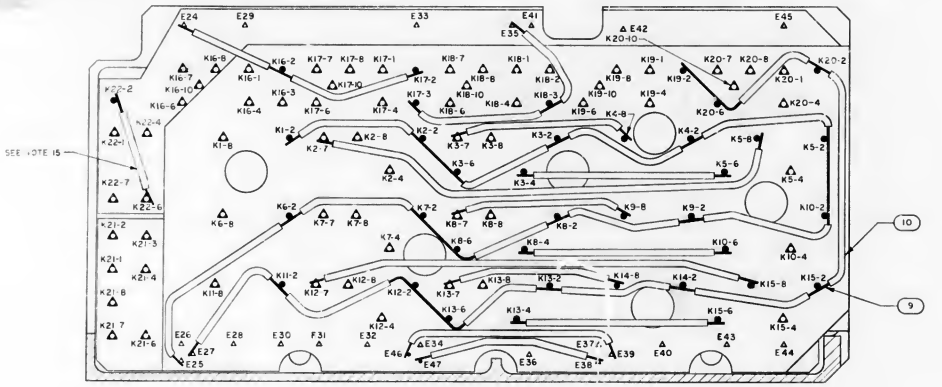

SECTION B-B
SHOWN WITH LOWER LEVEL WIRING REMOVED

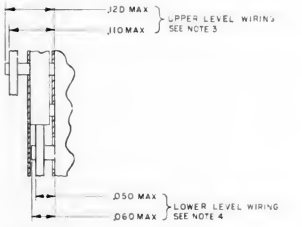

DETAIL A
SCALE 10/1

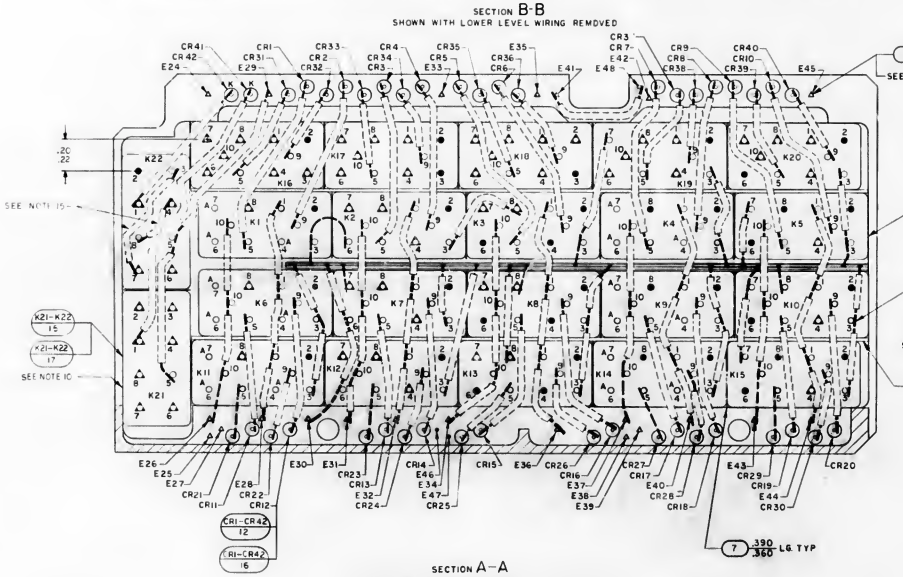

SECTION A-A
SHOWN WITH FIRST LEVEL INSULATOR REMOVED

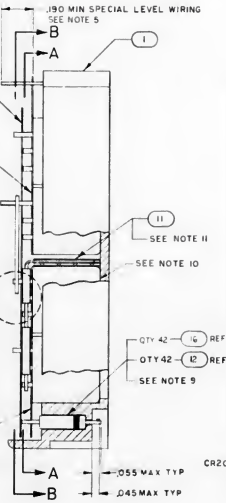

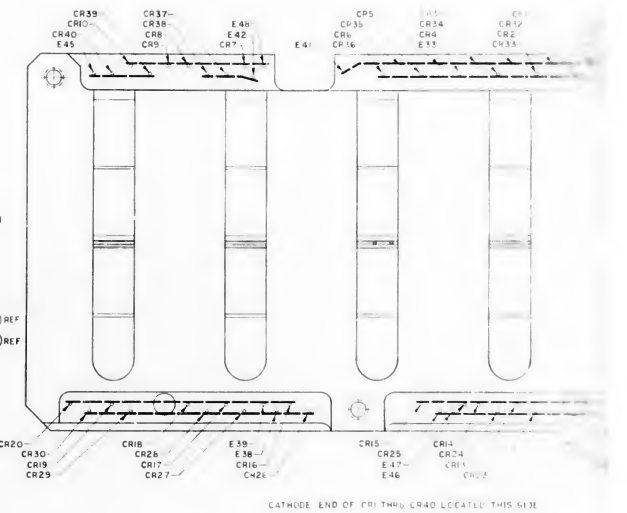

NOTES

1. INTERPRET DRAWING IN ACCORDANCE WITH STANDARDS PRESCRIBED BY MIL-D-70327
2. AR DENOTES AS REQUIRED
3. BLACK DOT AND SINGLE SOLID LEADS INDICATE UPPER LEVEL WIRING
4. WHITE DOT AND SINGLE DOTTED LEADS INDICATE LOWER LEVEL WIRING
5. △ INDICATES LEADS TO BE CUT FOR SPECIAL LEVEL WIRING
6. TRIM UNUSED LEADS MARKED A OF FIND NO.13,15,17 TO .010/.030 FROM CASE
7. WELD PER ND1002005
8. UNLESS OTHERWISE SPECIFIED, ALL WIRING SHALL BE IN ACCORDANCE WITH ND1002069
9. STAKE FIND NO.8,2616 TO FIND NO.1 PER ND1002009 METHOD C OR D.
10. BOND FIND NO.13,15,17&18 TO FIND NO.1 PER ND1002004 TYPE Σ.
11. REMOVE PROTECTIVE LINER FROM FIND NO.11 AND ASSEMBLE TO K6 THRU K10 AS SHOWN
12. K DENOTES CATHODE SIDE OF DIODE
13. IDENTIFY WITH PART NO. PER ND1002019
14. FIND NO.8 SHALL BE 2004688-1 OR 2004688-2, EXCEPT NOT BOTH IN A GIVEN ASSEMBLY.
15. JUMPERS FROM K22-8 TO K22-4, K22-7 TO K22-3 AND K22-6 TO K22-2 FOR -021 CONFIGURATION ONLY

2003910 E

REVISION			
A	REVISED PER TORR 2213 DR/CHK		
B	REVISED PER TORR 2 126 DR/CHK		
C	REVISED PER TORR 2676S DR/CHK		
D	REVISED PER TORR 3558 DR/CHK		
E	REVISED PER TORR 3400 DR/CHK		

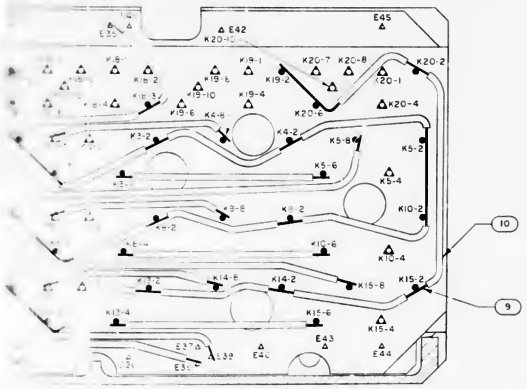

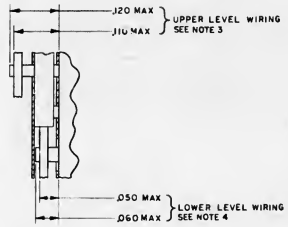

DETAIL A
SCALE 10/1

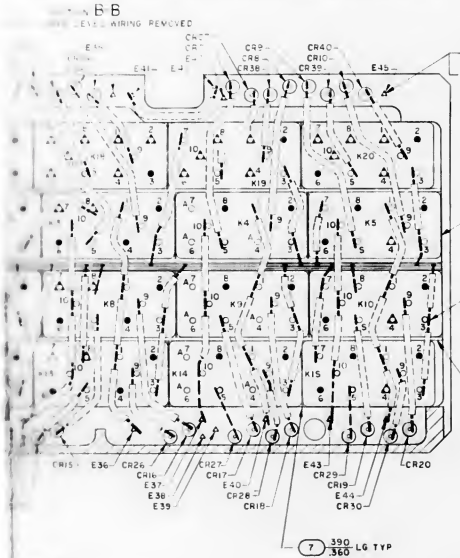

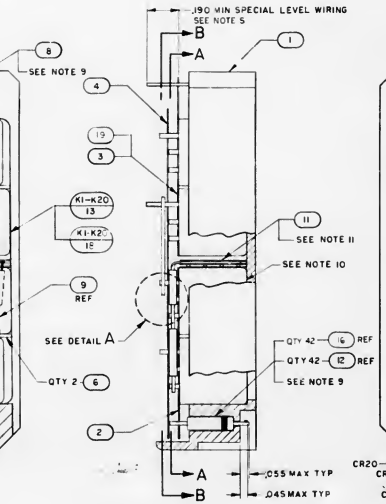

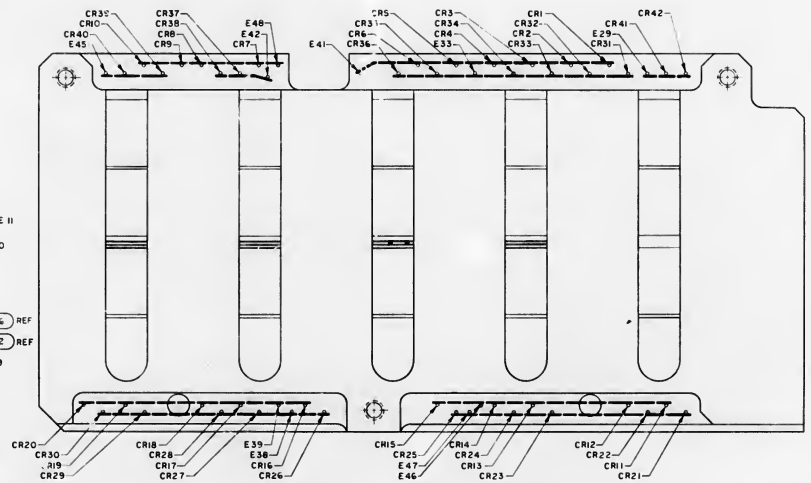

CATHODE END OF CR1 THRU CR40 LOCATED THIS SIDE

A
INSULATOR REMOVED

QTY REQD	QTY REQD	PART OR CENTAPRN NO	NOMENCLATURE OR DESCRIPTION	ITEM NO
—	—	2005973	SCHEMATIC	REF
1	—	2004692	INSULATOR B	19
20	—	SEE NOTE 14	RELAY	18
2	—	2004695-2	RELAY	17
—	—	2005902	SCHEMATIC	REF
—	—	2005947	SCHEMATIC	REF
42	—	2004183-001	DIODE	16
—	2	1010784-11	RELAY	15
—	2	1010764-9	RELAY	14
—	20	1006282-2	RELAY	13
—	42	2004103-001	DIODE	12
1	1	2003911-011	MATRIX ASSEMBLY	11
AR	AR	1006776-22	INSULATION, SLEEVING ELECTRICAL	10
AR	AR	1006757-1	WIRE, ELECTRICAL, .010 X .020	9
AR	AR	1006757-8	WIRE, ELECTRICAL, .020 DIA	8
AR	AR	1006806-24	INSULATION TAPE, ELECTRICAL	7
2	2	2004951	BOARD, INSULATOR	6
—	—	~~2004917~~	~~INSULATOR~~	~~5~~
1	1	2004916	INSULATOR	4
1	1	2004952	INSULATOR, B	3
1	1	2004933	INSULATOR, A	2
1	1	2004908	BLOCK, COMPONENT RELAY	1

021-011

		UNLESS OTHERWISE SPECIFIED DIMENSIONS ARE IN INCHES TOLERANCES ON FRACTIONS ±1/64 DECIMALS ±.005 ANGLES ±1° DO NOT SCALE THIS DRAWING MATERIAL HEAT TREATMENT FINAL FINISH	NATL INSTRUMENTATION LAB CAMBRIDGE, MASS. DRAWN DATE APPROVED MANNED SPACECRAFT CENTER HOUSTON, TEXAS
2003952			RELAY CIRCUIT ASSEMBLY INDICATOR DRIVER MODULE AGC DSKY
2003902			NASA APPROVAL MIT APPROVAL NR APPROVAL
NEXT ASSY	USED ON		CODE IDENT NO. 80230 J SIZE A NASA DRAWING NO. 2003910 SCALE 4/1 SHEET 1 OF 1
APPLICATION			

2003910 E

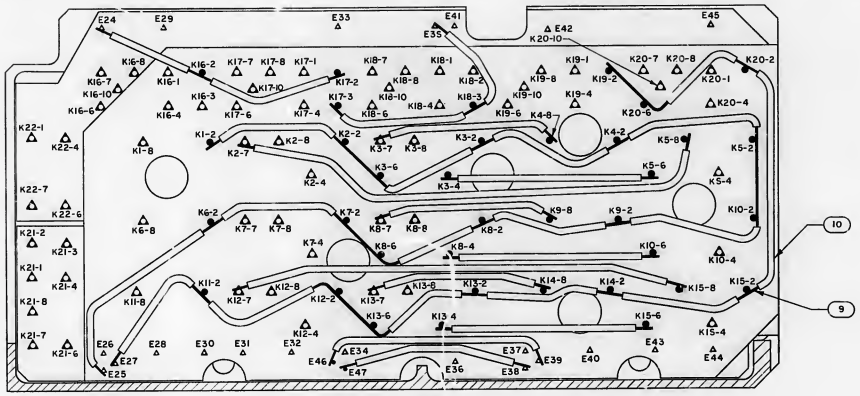

SECTION B-B
SHOWN WITH LOWER LEVEL WIRING REMOVED

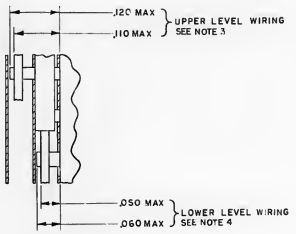

DETAIL A
SCALE 10/1

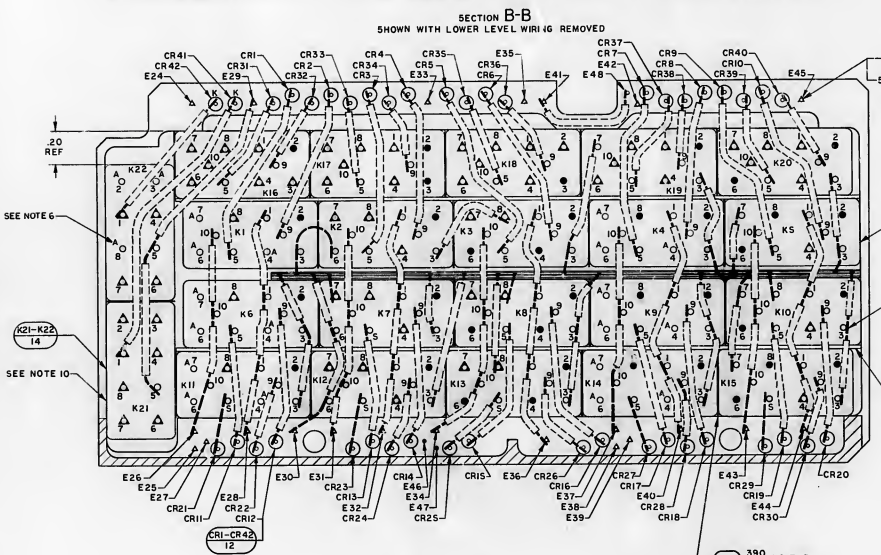

SECTION A-A
SHOWN WITH FIRST LEVEL INSULATOR REMOVED

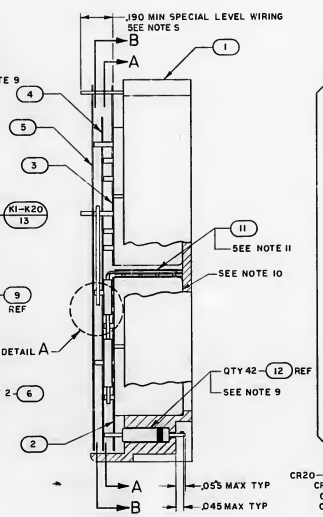

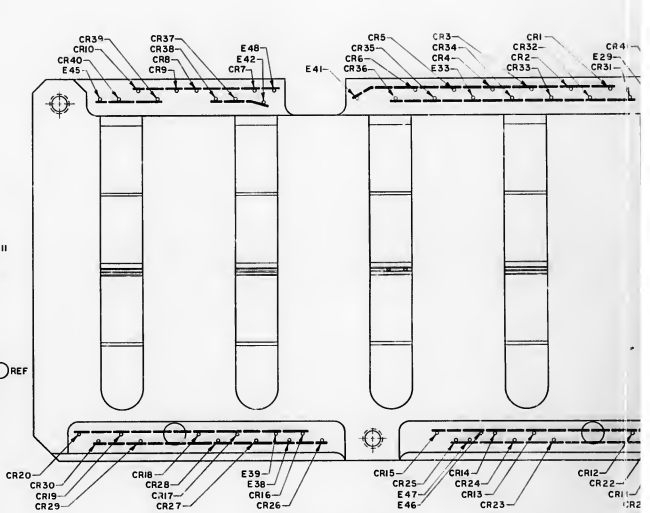

CATHODE END OF CR1 THRU CR40 LOCATED THIS SIDE

NOTES

1. INTERPRET DRAWING IN ACCORDANCE WITH STANDARDS PRESCRIBED BY MIL-D-70327
2. AR DENOTES AS REQUIRED
3. BLACK DOT AND SINGLE SOLID LEADS INDICATE UPPER LEVEL WIRING
4. WHITE DOT AND SINGLE DOTTED LEADS INDICATE LOWER LEVEL WIRING
5. △ INDICATES LEADS TO BE CUT FOR SPECIAL LEVEL WIRING
6. TRIM UNUSED LEADS MARKED A OF FIND NO.13 & 14 .010/.030 FROM CASE
7. WELD PER ND1002005
8. UNLESS OTHERWISE SPECIFIED, ALL WIRING SHALL BE IN ACCORDANCE WITH ND1002069
9. STAKE FIND NO.8 & 12 TO FIND NO.1 PER ND1002009 METHOD C OR D
10. BOND FIND NO.13 & 14 TO FIND NO.1 PER ND1002004 TYPE IV
11. REMOVE PROTECTIVE LINER FROM FIND NO.11 AND ASSEMBLE TO K6 THRU K10 AS SHOWN
12. K DENOTES CATHODE SIDE OF DIODE

REVISIONS			
SYM	DESCRIPTION	DATE	APPROVAL

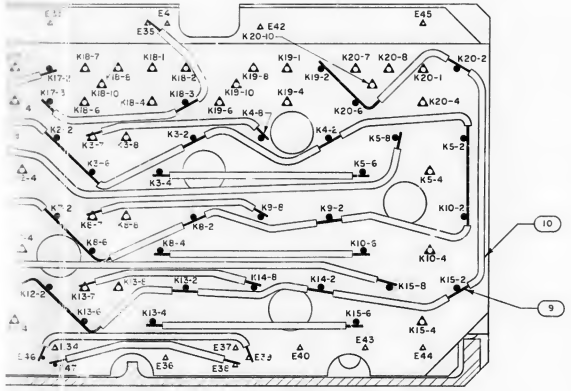

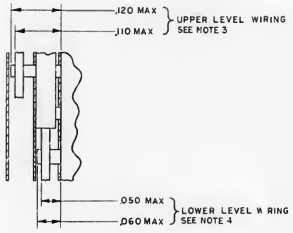

DETAIL A
SCALE 10/1

SECTION B-B
SHOWN WITH LOWER LEVEL WIRING REMOVED

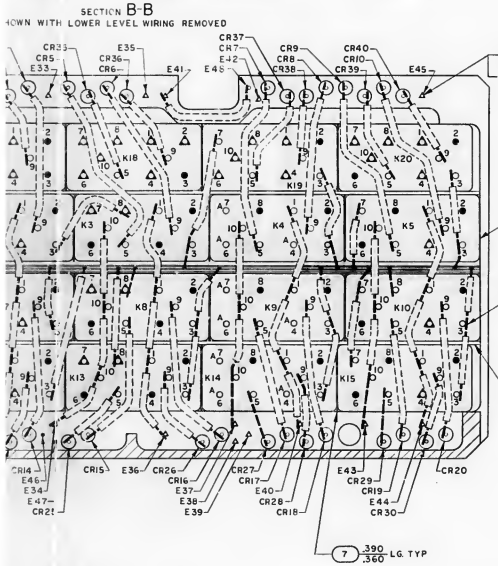

SECTION A-A
WITH FIRST LEVEL INSULATOR REMOVED

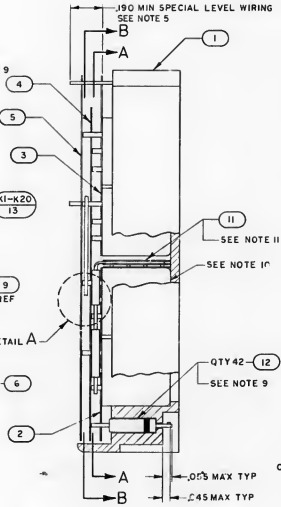

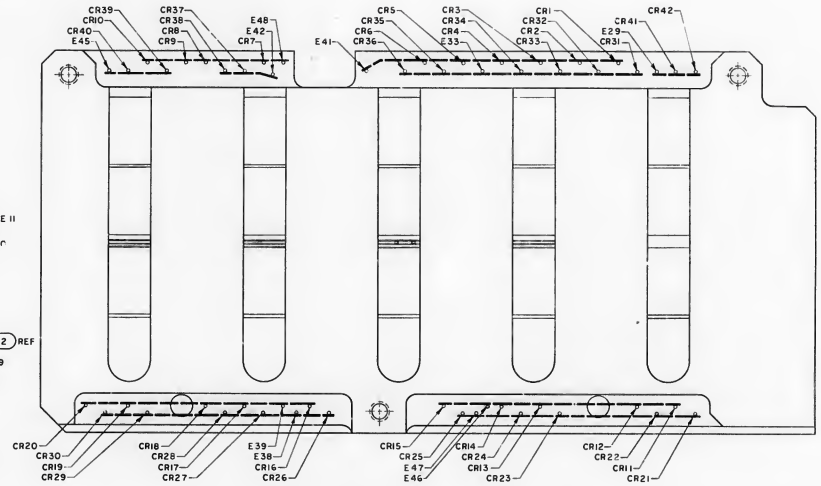

CATHODE END OF CR1 THRU CR40 LOCATED THIS SIDE

QTY REQD	PART OR IDENTIFYING NO	NOMENCLATURE OR DESCRIPTION	FIND NO
	2005902	SCHEMATIC	REF
2	1010784-9	RELAY	14
20	1006282-2	RELAY	13
42	1006751	DIODE	12
1	2003911	MATRIX ASSEMBLY	11
AR	1006776-22	INSULATION, SLEEVING ELECTRICAL	10
AR	1006757-1	WIRE, ELECTRICAL, .010 X .020	9
AR	1006757-8	WIRE, ELECTRICAL, .020 DIA	8
AR	1006806-24	INSULATION TAPE, ELECTRICAL	7
2	2004951	BOARD, INSULATOR	6
1	2004917	INSULATOR	5
1	2004916	INSULATOR	4
1	2004-52	INSULATOR, B	3
1	2004933	INSULATOR, A	2
1	2004908	BLOCK, COMPONENT RELAY	1
011		LIST OF MATERIALS	

2003910

2003902 NEXT ASSY	USED ON	APPLICATION	

UNLESS OTHERWISE SPECIFIED DIMENSIONS ARE IN INCHES
TOLERANCES ON
FRACTIONS DECIMALS ANGLES
DO NOT SCALE THIS DRAWING
MATERIAL
HEAT TREATMENT
FINAL FINISH

MIT INSTRUMENTATION LAB Cambridge Mass

DRAWN DATE APPROVED
CHECKED
APPROVAL
APPROVAL
NASA APPROVAL
MIT APPROVAL
MIT APPROVAL

MANNED SPACECRAFT CENTER
HOUSTON TEXAS

RELAY CIRCUIT ASSEMBLY
INDICATOR DRIVER MODULE
AGC DSKY

CODE IDENT NO.	SIZE	NASA DRAWING NO.
80230	J	2003910

SCALE 4/1 WT. SHEET 1 OF 1

SYM	REVISIONS	ZONE	APPROVALS
A	REVISED PER TDRR 2315 DR		
B	REVISED PER TDRR 23237 DR		
C	REVISED PER TDRR 23949 DR		
D	REVISED PER TDRR 24665 DR		

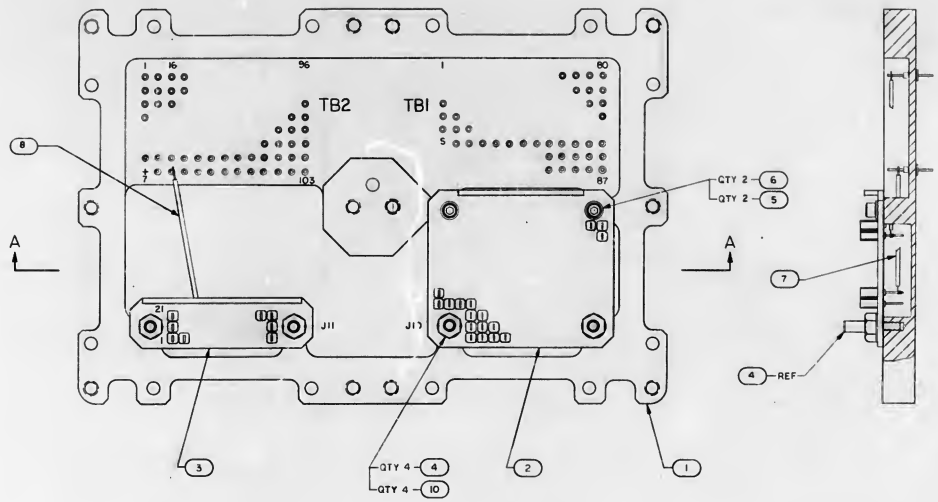

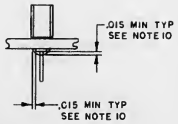

DETAIL A
SCALE 4/1

SECTION A-A

NOTES:

1. INTERPRET DRAWING IN ACCORDANCE WITH STANDARDS PRESCRIBED BY MIL-D-70327
2. AR DENOTES AS REQUIRED
3. WIRE WRAP PER WIRING LEGEND AND PER ND1002031 EXCEPT FIND NO 8 TO HAVE 5 MIN TO 7 MAX TURNS OF UNINSULATED WIRE, 1/2 TO 1 1/2 TURNS OF INSULATED WIRE, STRIP LENGTH OF .18 TO .100 AND A STRIP FORCE OF 5 LB MIN
4. UNLESS OTHERWISE SPECIFIED ALL WIRING SHALL BE IN ACCORDANCE WITH ND1002069
5. WELD PER ND1002005
6. ~~SOLDER PER ND1002071 USING SOLDER PER ND1002075.~~
7. IDENTIFY WITH PART NO. PER ND1002019
8. ENCAPSULATE PER ND1002236
9. DRESS AND TRIM USING FIND NO. 9
10. SEAL INSULATORS ON FIND NO. 2 AND 3 PER ND1002004 TYPE XI

QTY REQD	PART OR IDENTIFYING NO	NOMENCLATURE OR DESCRIPTION	FIND NO
4	NAS620C-6L	WASHER, FLAT	10
A R	1012507-003	TAPE, LACING	9
A R	1000807-32	WIRE, ELECTRICAL INSULATED	8
A R	1006732-1	WIRE, ELECTRICAL INSULATED	7
2	MS16995-10	SCREW, SOCKET HEAD	6
2	NAS620C4L	WASHER, FLAT	5
4	2004936	PIN, ALIGNMENT	4
1	2003914-011	CONNECTOR, PLATE ASSEMBLY	3
1	2003913-011	CONNECTOR, PLATE ASSEMBLY	2
1	2004919-011	PLATE, ADAPTER	1

011 — LIST OF MATERIALS

MIT INSTRUMENTATION LAB CAMBRIDGE MASS.

MANNED SPACECRAFT CENTER HOUSTON, TEXAS

UNLESS OTHERWISE SPECIFIED DIMENSIONS ARE IN INCHES
TOLERANCES ON FRACTIONS ± DECIMALS ± ANGLES ±
DO NOT SCALE THIS DRAWING
MATERIAL
HEAT TREATMENT
FINAL FINISH

DRAWN DATE
CHECKED
APPROVAL
APPROVAL
NASA APPROVAL
MIT APPROVAL
MIT APPROVAL

ADAPTER PLATF. ASSY
AGC DSKY

CODE IDENT NO 80230 | SIZE E | NASA DRAWING NO. 2003912

SCALE 2/1 | WT | SHEET 1 OF 3

2003903 — NEXT / SET | USED ON | APPLICATION

MASTER

2003912 D B A

2003912 D

REVISIONS				
SYM	DESCRIPTION	DATE	APPROVAL
A	REVISED PER TDRR 22315 DR E.P. Taylor CHK [illegible]	3/16/65	[illegible]
B	REVISED PER TDRR 23257 DR [illegible] CHK [illegible]	[illegible]	[illegible]
C	REVISED PER TDRR 23948 DR [illegible] CHK [illegible]	11/16/65	[illegible]
D	REVISED PER TDRR 24665 DR E.P. Taylor CHK [illegible]	2/14/66	[illegible]

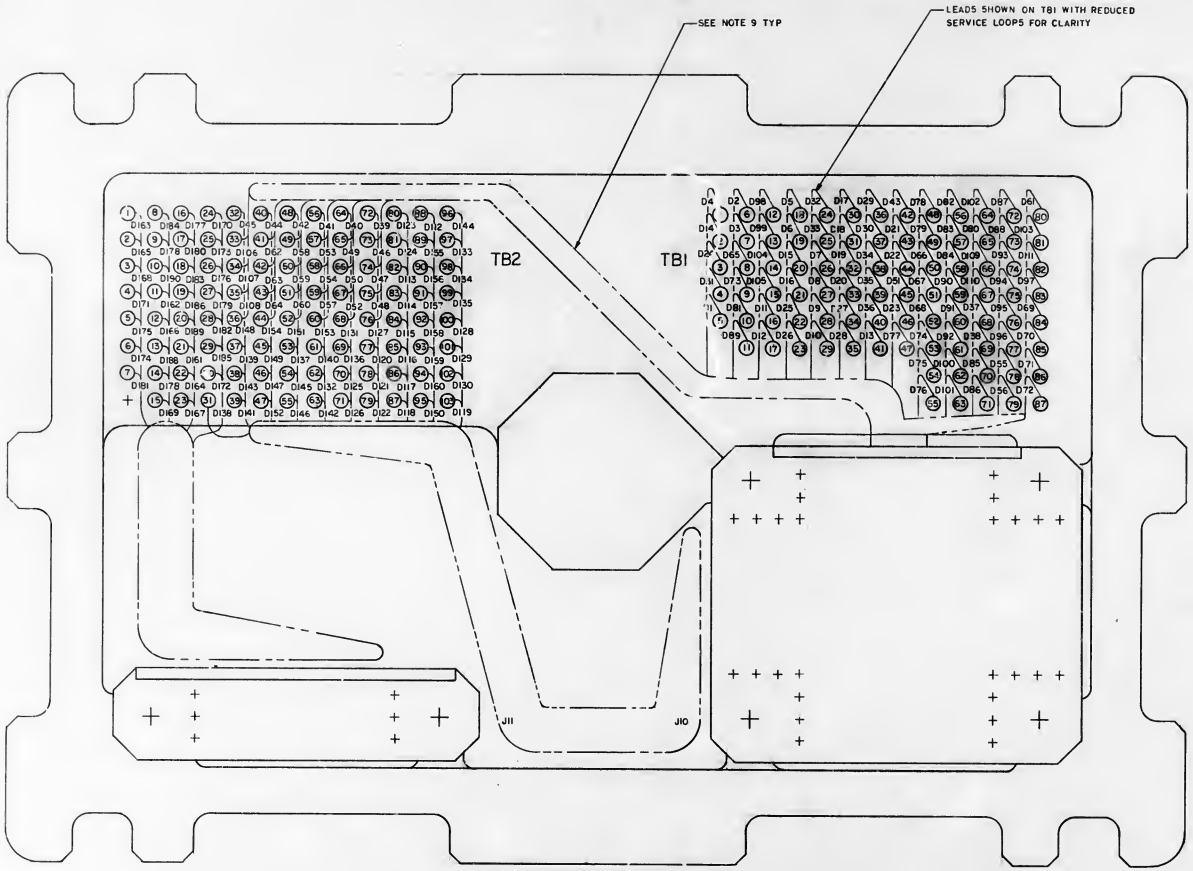

QTY REQD	PART OR IDENTIFYING NO	NOMENCLATURE OR DESCRIPTION	FINE NO.
		LIST OF MATERIALS	

		UNLESS OTHERWISE SPECIFIED DIMENSIONS ARE IN INCHES TOLERANCES ON FRACTIONS ± DECIMALS ± ANGLES ± DO NOT SCALE THIS DRAWING MATERIAL	
		HEAT TREATMENT	
NEXT ASSY	USED ON	FINAL FINISH	
APPLICATION			

M.I.T. INSTRUMENTATION LAB CAMBRIDGE, MASS. — CONTRACT

DRAWN E.P. Taylor DATE 3/16/65
CHECKED [illegible] 18 Mar 65
APPROVAL [illegible]
APPROVAL [illegible]
NASA APPROVAL [illegible]
MIT APPROVAL [illegible]

MANNED SPACECRAFT CENTER
HOUSTON, TEXAS

ADAPTER PLATE ASSY

AGC DSKY

CODE IDENT NO	SIZE	NASA DRAWING NO
80230	E	2003912

SCALE NONE WT SHEET 2 OF 3

2003912

2003912 D

REVISIONS				
ZONE	SYM	DESCRIPTION	DATE	APPROVED
	A	REVISED PER TDRR 22315 DR R.C.T. CHK		
	B	REVISED PER TDRR 23237 DR CHK		
	C	REVISED PER TDRR 23949 DR CHK		
	D	REVISED PER TDRR 24665 DR CHK		

LEAD ELECTRICAL

COND IDENT	REMARKS	FROM	FIND NO.	COLOR	SIZE AWG	LENGTH	TO	REMARKS
D1	SEE NOTE 3	J10-1	7	YEL	30	AR	TB1-5	SEE NOTE 5
D2		-2					-6	
D3		-3					-7	
D4		-4					-1	
D5		-5					-18	
D6		-6					-19	
D7		-7					-26	
D8		-8					-27	
D9		-9					-28	
D10		-10					-29	
D11		-11					-16	
D12		-12					-17	
D13		-13					-41	
D14		-14					-2	
D15		-15					-20	
D16		-16					-21	
D17		-17					-30	
D18		-18					-31	
D19		-19					-32	
D20		-20					-33	
D21		-21					-43	
D22		-22					-44	
D23		-23					-46	
D24		-24					-3	
D25		-25					-22	
D26		-26					-23	
D27		-27					-34	
D28		-28					-35	
D29		-29					-36	
D30		-30					-37	
D31		-37					-4	
D32		-38					-24	
D33		-39					-25	
D34		-40					-38	
D35		-41					-39	
D36		-42					-40	
D37		-43					-68	
D38		-44					TB1-69	
D39		-45					TB2-73	
D40		-46					-65	
D41		-53					-57	
D42		-54					TB2-49	
D43		-55					TB1-42	
D44		-56					TB2-41	
D45		-57					-33	
D46		-58					-74	
D47		-59					-75	
D48		-60					-76	
D49		-67					-66	
D50		-68					TB2-67	
D51		-69					TB1-45	
D52		-70					TB2-68	
D53		-71					TB2-58	
D54		-72					TB2-59	
D55		-73					TB1-78	
D56		-74					TB1-79	
D57		-81					TB2-60	
D58		-82					-50	
D59		-83					-51	
D60		-84					TB2-52	
D61		-85					TB1-80	
D62		-86					TB2-42	
D63		-87					TB2-43	
D64		-88					TB2-44	
D65		-95					TB1-8	
D66		-96					-50	
D67		-97					-51	
D68		-98					-52	
D69		-99					-84	
D70		-100					-85	
D71		-101					-86	
D72		J10-102	7	YEL	30	AR	TB1-87	

LEAD ELECTRICAL

COND IDENT	REMARKS	FROM	FIND NO.	COLOR	SIZE AWG	LENGTH	TO	REMARKS
D73	SEE NOTE 3	J10-109	7	YEL	30	AR	TB1-9	SEE NOTE 5
D74		-110					-53	
D75		-111					-54	
D76		-112					-55	
D77		-113					-47	
D78		-114					-48	
D79		-115					-49	
D80		-116					-65	
D81		-123					-10	
D82		-124					-56	
D83		-125					-57	
D84		-126					-58	
D85		-127					-70	
D86		-128					-71	
D87		-129					-72	
D88		-130					-73	
D89		-137					-11	
D90		-138					-59	
D91		-139					-60	
D92		-140					-61	
D93		-141					-74	
D94		-142					-75	
D95		-143					-76	
D96		-144					-77	
D97		-146					-85	
D98		-147					-12	
D99		-148					-13	
D100		-149					-62	
D101		-150					-63	
D102		-151					-64	
D103		-152					-81	
D104		-153					-14	
D105		-154					TB1-15	
D106		-155					TB2-34	
D107		-156					TB2-35	
D108		-157					TB2-36	
D109		-158					TB1-66	
D110		-159					TB1-67	
D111		-160					TB1-82	
D112		-145					TB2-88	
D113		-131					-82	
D114		-132					-83	
D115		-133					-84	
D116		-134					-85	
D117		-135					-86	
D118		-136					-87	
D119		-117					-103	
D120		-118					-77	
D121		-119					-78	
D122		-120					-79	
D123		-121					-80	
D124		-122					-81	
D125		-103					-70	
D126		-104					-71	
D127		-105					-72	
D128		-106					-100	
D129		-107					-101	
D130		-108					-102	
D131		-89					-64	
D132		-90					-62	
D133		-91					-97	
D134		-92					-98	
D135		-93					-99	
D136		-94					-69	
D137		-75					-53	
D138		-76					-31	
D139		-77					-37	
D140		-78					-61	
D141		-79					-39	
D142		-80					-63	
D143		-61					-38	
D144		J10-62	7	YEL	30	AR	TB2-96	

LEAD ELECTRICAL

COND IDENT	REMARKS	FROM	FIND NO.	COLOR	SIZE AWG	LENGTH	TO	REMARKS
D145	SEE NOTE 3	J10-63	7	YEL	30	AR	TB2-54	SEE NOTE 5
D146		-64					-55	
D147		-65					-46	
D148		-66					-32	
D149		-47					-45	
D150		-48					-95	
D151		-49					-48	
D152		+50					-47	
D153		+51					-56	
D154		+52					-40	
D155		+31					-89	
D156		+32					+90	
D157		+33					+91	
D158		+34					+92	
D159		+35					+93	
D160		J10-36	7	YEL	30		+94	
D161	SEE NOTE 3	J11-21	8	WHT	26		+21	SEE NOTE 5
D162		+11					+11	
D163		-1					+1	
D164		+22					-22	
D165		+12					-2	
D166		-2					-12	
D167		+23					-23	
D168		-15					-3	
D169		-3					-13	
D170		-24					-24	
D171		-4					-14	
D172		-13					-30	
D173		-25					-25	
D174		-6					-15	
D175		-5					-5	
D176		-26					-26	
D177		-16					-16	
D178		-14					-6	
D179		-27					-27	
D180		-17					-17	
D181		-7					-7	
D182		-28					-28	
D183		-18					-18	
D184		-8					-8	
D185		-29					-29	
D186		-19					-19	
D187		-9					-9	
D188		-30					-4	
D189		-20					-20	
D190		J11-10	8	WHT	26	AR	TB2-10	

MASTER

QTY REQD	PART OR IDENTIFYING NO	NOMENCLATURE OR DESCRIPTION	*TBD NO
		LIST OF MATERIALS	

UNLESS OTHERWISE SPECIFIED DIMENSIONS ARE IN INCHES
TOLERANCES ON
FRACTIONS ± DECIMALS ± ANGLES ±
DO NOT SCALE THIS DRAWING
MATERIAL
HEAT TREATMENT
FINAL FINISH
NEXT ASSY | USED ON
APPLICATION

BTF INSTRUMENTATION LAB Cambridge, Mass.
DRAWN DATE
CHECKED
APPROVAL
APPROVAL
NASA APPROVAL
BTF APPROVAL

MANNED SPACECRAFT CENTER HOUSTON, TEXAS

ADAPTER PLATE ASSY

AGC DSKY

CODE IDENT NO. 80230 | SIZE E | NASA DRAWING NO 2003912

SCALE NONE | WT | SHEET 3 OF 3

2003915 E

REVISIONS

SYM	ZONE	DESCRIPTION	DR	CHK	DATE	APPROVED
A		REVISED PER TDRR 21399				
B		REVISED PER TDRR 22316				
C		REVISED PER TDRR 23949				
D		REVISED PER TDRR 24665				
E		REVISED PER TDRR 25310				

JUMPER LIST

COND IDENT	REMARKS	FROM	FIND NO	COLOR	SIZE AWG	LENGTH	TO	REMARKS
F1	SEE NOTE 6	J8-4	6	YELLOW	30	AR	P12-188	SEE NOTE 8
F2		-7					-198	
F3		-12					-199	
F4		-23					-180	
F5		-28					-206	
F6		-29					-200	
F7		-31					-205	
F8		-32					-212	
F9		J8-33	6	YELLOW	30		-211	
F10	SEE NOTE 6 *	P12-183	7&8	—	.020DIA	AR	P12-184	*

* DENOTES MUST BE LOWER LEVEL

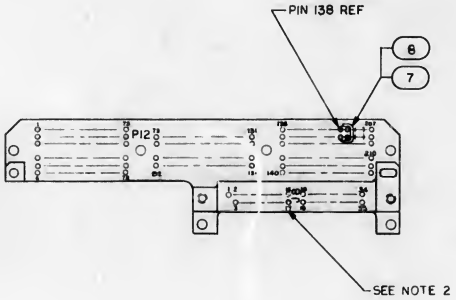

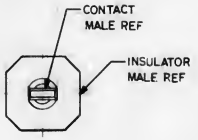

DETAIL A
SCALE 10/1
212 PLACES

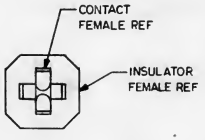

DETAIL B
SCALE 10/1
35 PLACES

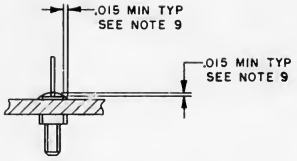

DETAIL C
SCALE 4/1

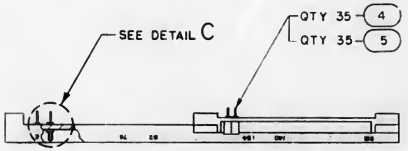

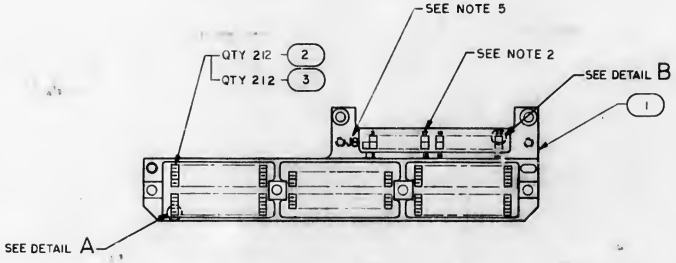

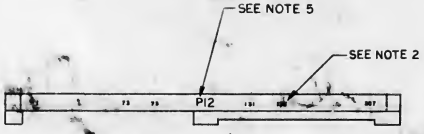

NOTES:

1. INTERPRET DRAWING IN ACCORDANCE WITH STANDARDS PRESCRIBED BY MIL-D-70327
2. MARK APPROX. WHERE SHOWN .07/.05 HIGH BLACK CHARACTERS PER ND1002019 AND ND1002122 TYPE IIa CLASS 2 USING INK 1006271-11
3. IDENTIFY WITH PART NO. PER ND1002019
4. ASSEMBLE FIND NO. 2 THRU 5 TO FIND NO. 1 PER ND1002136
5. MARK APPROX WHERE SHOWN .13/.11 HIGH BLACK CHARACTERS PER ND1002019 AND ND1002122 TYPE II, CLASS 2 USING INK 1006271-11
6. WIRE WRAP USING JUMPER LIST PER ND1002031
7. AR DENOTES AS REQUIRED
8. WELD PER ND1002005
9. SEAL FIND NO. 2,3,4 AND 5 TO FIND NO. 1 PER ND1002004, TYPE VI

QTY REQD	PART OR IDENTIFYING NO.	MATERIAL OR NOTES	NOMENCLATURE OR DESCRIPTION	FIND NO.
AR	1006776-22		INSULATION, SLEEVING	8
AR	1006757-8		WIRE, ELECTRICAL .020 DIA	7
AR	1006732-1		WIRE, ELECTRICAL	6
35	1006774		INSULATOR, WRAPOST FEMALE	5
35	1006781-1		CONTACT, WRAPOST FEMALE	4
212	1006775		INSULATOR, WRAPOST MALE	3
212	1006782-3		CONTACT, WRAPOST MALE	2
1	2004922-011		PLATE, CONNECTOR	1

011 LIST OF MATERIALS

2003903	
NEXT ASSY	USED ON
APPLICATION	

UNLESS OTHERWISE SPECIFIED DIMENSIONS ARE IN INCHES
CAPACITOR VALUES ARE IN µf
RESISTOR VALUES ARE IN OHMS
TOLERANCES ON
FRACTIONS DECIMALS ANGLES
DO NOT SCALE THIS DRAWING
MATERIAL

MIT INSTRUMENTATION LAB CAMBRIDGE, MASS.

MANNED SPACECRAFT CENTER HOUSTON, TEXAS

DRAWN
CHECKED
APPROVED
APPROVED
APPROVED MIT
APPROVED MSC
DATE

CONNECTOR PLATE ASSY FRONT HOUSING AGC DSKY

CODE IDENT NO. 80230 | SIZE D | DRAWING NO. 2003915

SCALE 1/1 | SHEET 1 OF 1

2003916 C

REVISIONS 20857

SYM	ZONE	DESCRIPTION	DR	CHK	DATE	APPROVED
A		REVISED PER TDRR 22316				
B		REVISED PER TDRR 23957				
C		REVISED PER TDRR 24470				

JUMPER LIST

CONT IDENT	REMARKS	FROM	FIND NO.	COLOR	SIZE AWG	LENGTH	TO	REMARKS
E1	*	J12-186	5	WHT	26	AR	J12-191	SEE NOTE 7
E2		J12-191	6	—			J12-197	
E3		J12-197	6	—			J12-203	
E4		J12-203	6	—			J12-202	
E5		J12-202	6	—			J12-201	
E6		J12-201	6	—			J12-207	
E7		J12-207	6	—			J12-208	
E8		J12-208	6	—			J12-209	
E9	*	J12-181	5	WHT			J12-185	
E10		J12-185	5	WHT			J12-190	
E11		J12-190	6	—			J12-195	
E12		J12-195	6	—			J12-196	
E13	*	J12-189	5	WHT			J12-179	
E14	*	J12-166	6	—			J12-165	
E15	*	J12-183	6	WHT	26	AR	J12-184	

SEE NOTE 7

* DENOTES MUST BE FIRST LEVEL

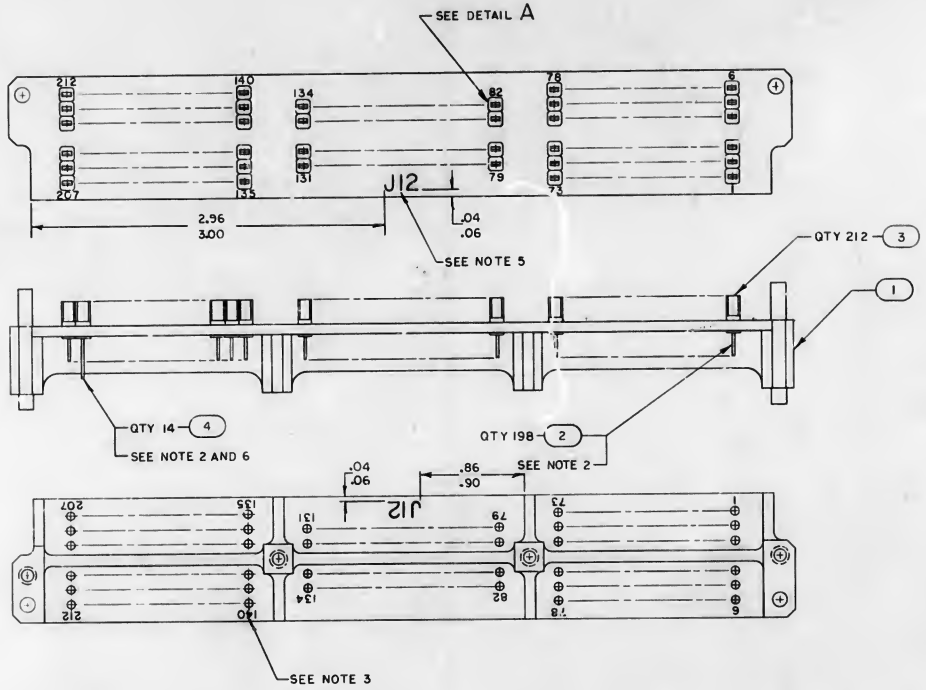

NOTES

1. INTERPRET DRAWING IN ACCORDANCE WITH STANDARDS PRESCRIBED BY MIL-D-70327
2. ASSEMBLE FIND NO. 2, FIND NO. 3 AND FIND NO. 4 TO FIND NO. 1 PER ND1002136
3. MARK .05/.07 HIGH BLACK CHARACTERS LOCATE APPROX AS SHOWN PER ND1002019 AND ND1002122 TYPE II, CLASS 2 USING INK 1006271-11
4. IDENTIFY WITH PART NO. PER ND1002019
5. MARK .10/.14 HIGH BLACK CHARACTERS PER ND1002019 AND ND1002122, TYPE II, CLASS 2 USING INK 1006271-11
6. FIND NO. 4 TO BE INSTALLED AT PIN POSITIONS 207, 180, 190, 191, 181, 185, 195, 197, 201, 202, 203, 186, 208, 166, 183 AND 184
7. WIRE WRAP USING JUMPER LIST PER ND1002031 EXCEPT FIND NO. 5 TO HAVE; 5 MIN TO 7 MAX TURNS OF UNINSULATED WIRE; 1/2 TO 1 1/2 TURNS OF INSULATED WIRE; STRIP LENGTH OF 1.18 TO 1.00; AND A STRIP FORCE OF 6 LB MIN, AND FIND NO. 6 TO HAVE 6 MIN TO 8 MAX TURNS OF BARE WIRE AND A STRIP FORCE OF 6 LB MIN
8. AR DENOTES AS REQUIRED

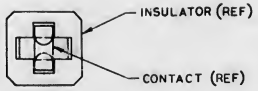

DETAIL A
SCALE 10/1
212 PLACES

QTY REQD	PART OR IDENTIFYING NO.	MATERIAL OR NOTES	NOMENCLATURE OR DESCRIPTION	FIND NO.
AR	QQ-W-343 TYPE S		WIRE, AWG 26, SOFT COATED (Ω)	6
AR	1010807-22		WIRE, ELECTRICAL	5
16	1006781-2		CONTACT, WRAPOST, FEMALE	4
212	1006774		INSULATOR, WRAPOST, FEMALE	3
196	1006781-1		CONTACT, WRAPOST, FEMALE	2
1	2004923-011		PLATE, CONNECTOR	1

011 LIST OF MATERIALS

2003954	
2003903	
NEXT ASSY	USED ON
APPLICATION	

UNLESS OTHERWISE SPECIFIED DIMENSIONS ARE IN INCHES
CAPACITOR VALUES ARE IN μf
RESISTOR VALUES ARE IN OHMS
TOLERANCES ON
FRACTIONS DECIMALS ANGLES
± ± ±
DO NOT SCALE THIS DRAWING
MATERIAL

MIT INSTRUMENTATION LAB
CAMBRIDGE, MASS.

MANNED SPACECRAFT CENTER
HOUSTON, TEXAS

DRAWN 12 APR 65
CHECKED 9 June 65
APPROVED 10 June 65
APPROVED 30 July 65
APPROVED MIT 7-17-65
APPROVED MSC 7-17-65
DATE

CONNECTOR PLATE ASSY
MAIN HOUSING
AGC DSKY

CODE IDENT NO. 80230 | SIZE D | DRAWING NO. 2003916
SCALE 2/1 | SHEET 1 OF 1

COND IDENT	REMARKS	FROM	FIND NO.	COLOR	SIZE AWG	LENGTH	TO	REMARKS
G1		* J1-3	6	WHT	26	AR	J2-3	
G2		J2-3	↓	↓	↓	↓	J3-3	
G3		J3-3					J3-9	
G4		J3-9					J3-10	
G5		J5-10					J6-9	
G6		J6-9					J6-64	
G7		* J2-10					J3-10	
G8		J3-10					J3-64	
G9		J3-64	↓	↓	↓	↓	J5-9	
G10		J5-9	6	WHT	26	AR	J5-64	

* DENOTES WIREWRAP MUST BE FIRST LEVEL

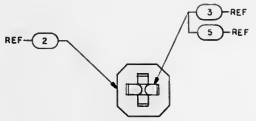

DETAIL A
SCALE 10/1
756 PLACES

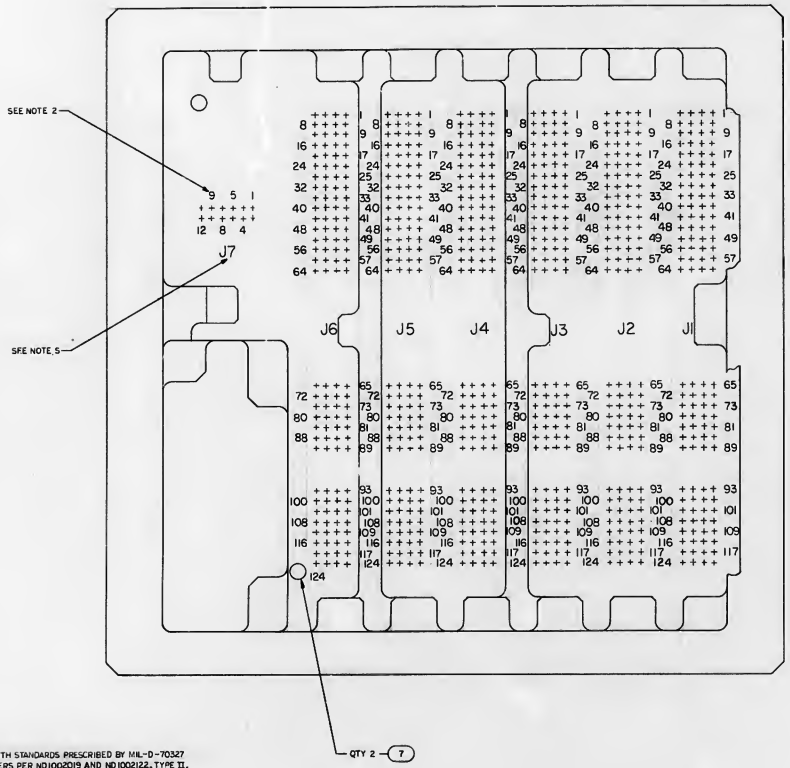

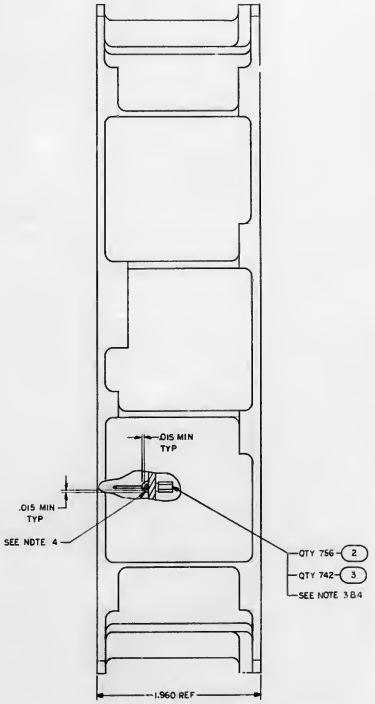

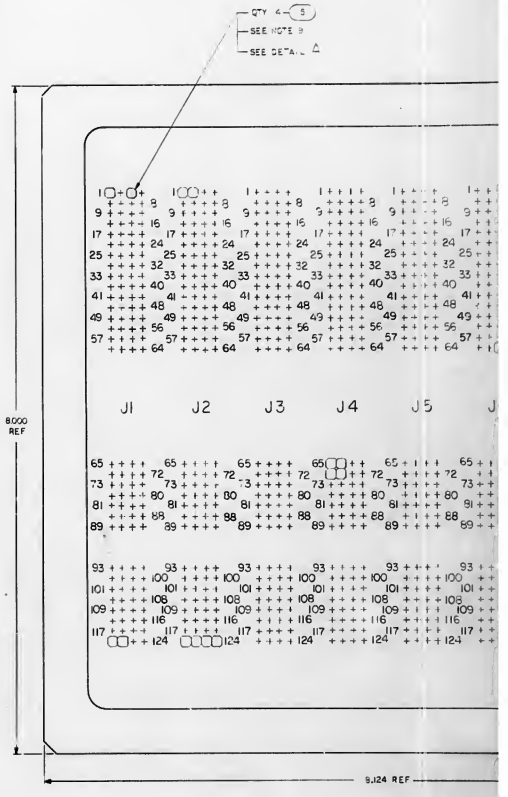

NOTES

1. INTERPRET DRAWING IN ACCORDANCE WITH STANDARDS PRESCRIBED BY MIL-D-70327
2. MARK .070/.050 HIGH BLACK CHARACTERS PER ND1002019 AND ND1002122, TYPE II, CLASS 2, USING INK 1006271-11. CENTRALIZE AS SHOWN
3. ASSEMBLE FIND NO.2, FIND NO.3 AND FIND NO.5 TO FIND NO.1 PER ND1002136
4. SEAL FIND NO.2, FIND NO.3 AND FIND NO.5 TO FIND NO.1 PER ND1002004, TYPE VI
5. MARK .130/.110 HIGH BLACK CHARACTERS PER ND1002019 AND ND1002122, TYPE II, CLASS 2, USING INK 1006271-11. CENTRALIZE AS SHOWN
6. IDENTIFY WITH DRAWING NO. AND REVISION PER ND1002019
7. AR DENOTES AS REQUIRED
8. WIREWRAP PER ND1002031 USING CHART AND WIREWRAP CARD DECK 2005906
9. INSTALL FIND NO.5 IN PIN POSITIONS J1-3, J2-1, J2-3, J2-10, J2-11, J3-3, J3-9, J3-10, J3-64, J5-9, J5-10, J6-9, J7-2 AND J7-9

2003917

2003964
NEXT ASSY

2003917

REVISIONS			
SYM	DESCRIPTION	DATE	APPROVAL

COND IDENT	REMARKS	FROM	FIND NO.	COLOR	SIZE AWG	LENGTH	TO	REMARKS
G1		* J1-3	6	WHT	26	AR	J2-3	
G2		J2-3	↓	↓	↓	↓	J3-3	
G3		J3-3					J3-9	
G4		J3-9					J5-10	
G5		J5-10					J6-9	
G6		J6-9					J6-64	
G7		* J2-10					J3-10	
G8		J3-10					J3-64	
G9		J3-64	↑	↑	↑	↑	J5-9	
G10		J5-9	6	WHT	26	AR	J5-64	

* DENOTES WIREWRAP MUST BE FIRST LEVEL

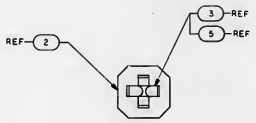

DETAIL A
SCALE 10/1
756 PLACES

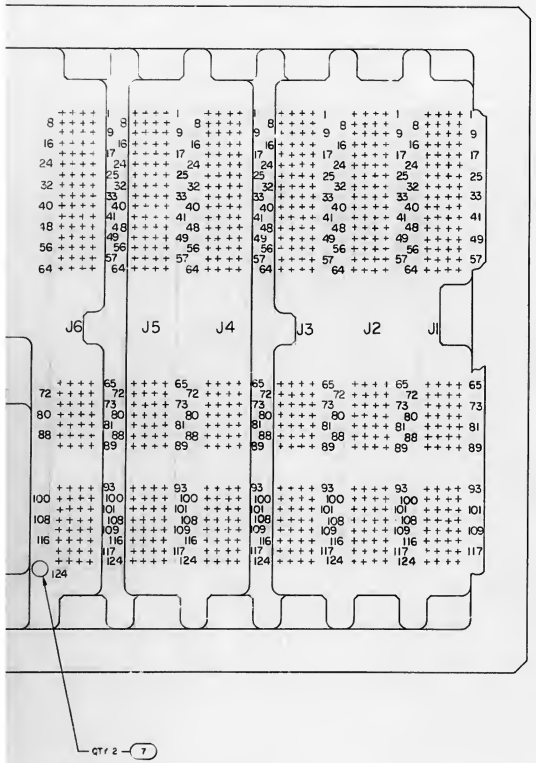

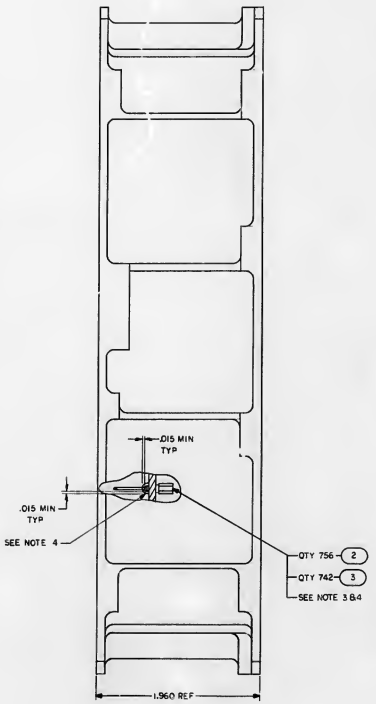

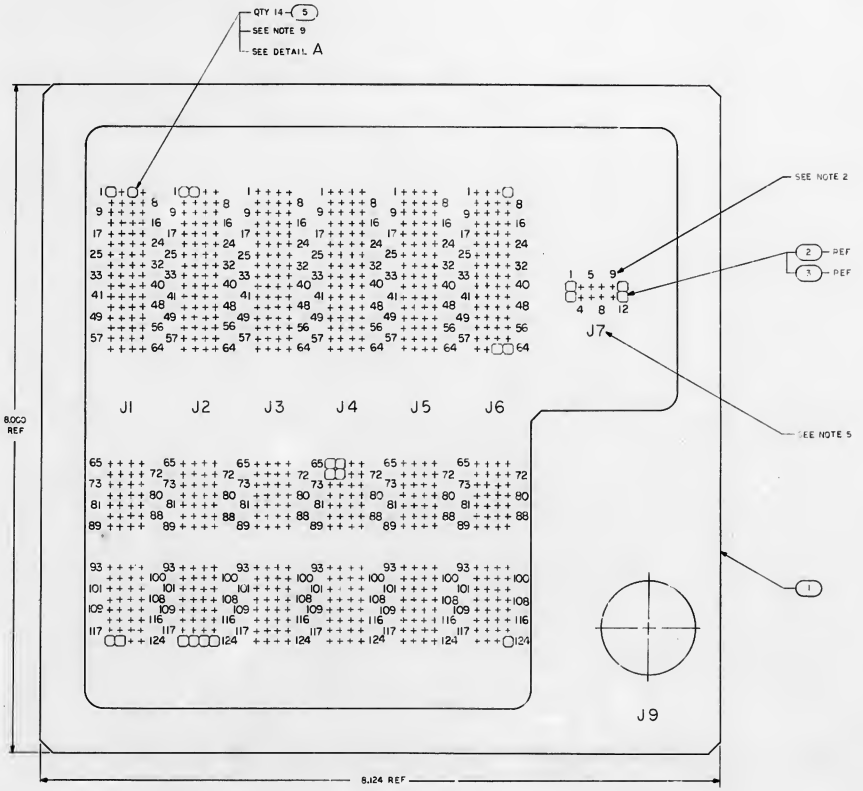

QTY REQD	PART OR IDENTIFYING NO	NOMENCLATURE OR DESCRIPTION	FIND NO
	2005906	WIREWRAP CARD DECK	REF
2	2004361	PIN HARNESS	7
AR	1010807-22	WIRE, ELEC	6
14	1006781-2	CONTACT, WRAPOST-FEMALE, MINIATURE	5
AR	1010940-003	WIRE, ELEC	4
742	1006781-4	CONTACT, WRAPOST-FEMALE, MINIATURE	3
756	1006774	INSULATOR, WRAPOST-FEMALE, MINIATURE	2
1	2004924-011	PLATE, IDM	1

011 LIST OF MATERIALS

2003904		UNLESS OTHERWISE SPECIFIED DIMENSIONS ARE IN INCHES TOLERANCES ON FRACTIONS ± DECIMALS ± ANGLES ±	MANNED SPACECRAFT CENTER HOUSTON TEXAS
NEXT ASSY	USED ON	DO NOT SCALE THIS DRAWING MATERIAL	WIREWRAP IDM PLATE ASSY MAIN HOUSING AGC DSKY
APPLICATION		HEAT TREATMENT FINAL FINISH	CODE IDENT NO 80230 SIZE J NASA DRAWING NO 2003917

MIT INSTRUMENTATION LAB CAMBRIDGE MASS

DRAWN DATE CHECKED APPROVAL APPROVAL NASA APPROVAL MIT APPROVAL

SCALE 2/1 WT SHEET 1 OF 1

2003917

REVISIONS			
SYM	DESCRIPTION	DATE	APPROVAL

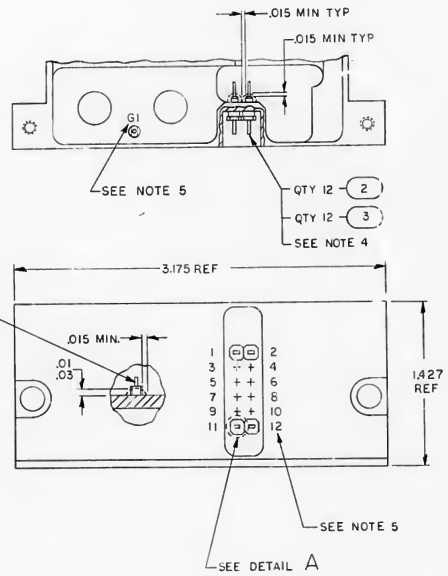

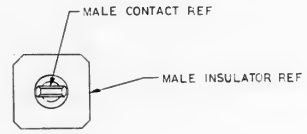

DETAIL A
SCALE 10/1
12 PLACES

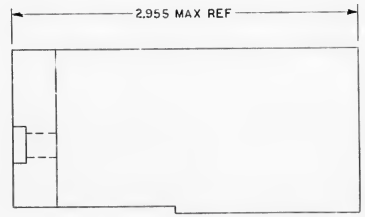

NOTES
1. INTERPRET DRAWING IN ACCORDANCE WITH STANDARDS PRESCRIBED BY MIL-D-70327
2. MOUNTING TORQUE FOR FIND NO. 4 TO BE 15-20 INCH OUNCES
3. ASSEMBLE FIND NO. 2 & FIND NO. 3 TO FIND NO. 1 PER ND1002136
4. SEAL FIND NO. 2, 3 & FIND NO. 4 TO FIND NO. 1 PER ND1002004, TYPE VI
5. MARK .05/.07 HIGH WHITE CHARACTERS PER ND1002019 & ND1002122 TYPE II, CLASS 2 USING INK 1006271-1. CENTRALIZE AS SHOWN
6. IDENTIFY WITH DRAWING NO. & REVISION PER ND1002019

QTY REQD	PART OR IDENTIFYING NO.	NOMENCLATURE OR DESCRIPTION	FIND NO.
1	2004039	TERMINAL, THREADED	4
12	1006782-6	CONTACT, WRAPOST-MALE, MINATURE	3
12	1006775	INSULATOR, WRAPOST-MALE, MINATURE	2
1	2004907-011	HEADER	1
011		LIST OF MATERIALS	

2003901	
NEXT ASSY	USED ON
APPLICATION	

UNLESS OTHERWISE SPECIFIED
DIMENSIONS ARE IN INCHES
TOLERANCES ON
FRACTIONS ± DECIMALS ± ANGLES ±
DO NOT SCALE THIS DRAWING
MATERIAL
HEAT TREATMENT
FINAL FINISH

MIT INSTRUMENTATION LAB
CAMBRIDGE, MASS
DWG NO. CONTRACT

DRAWN [illegible] DATE [illegible]
CHECKED [illegible]
APPROVAL [illegible]
APPROVAL [illegible]
NASA APPROVAL [illegible]
MIT APPROVAL [illegible]

MANNED SPACECRAFT CENTER
HOUSTON, TEXAS

HEADER ASSY
POWER SUPPLY MODULE
AGC DSKY

CODE IDENT NO.	SIZE	NASA DRAWING NO.
80230	D	2003921
SCALE 2/1	WT	SHEET 1 OF 1

ASSEMBLY INFORMATION CHART

FROM REMARKS	FROM COND IDENT	FROM STA NO.	FROM DESTINATION	DESCRIPTION COLOR	DESCRIPTION AWG	DESCRIPTION FIND NO	TO STA NO.	TO DESTINATION	TO REMARKS
	B1	1	J9-37	WHITE	26	1	15	J5-6	
	B2	1	J9-85				58	J3-12	
	B3	1	J9-87				56	J4-10	
	B4	1	J9-86				62	J2-11	
	B5	1	J9-91				16	J5-5	
	B6	1	J9-28				25	J12-199	
	B7	1	J9-61				13	J5-3	
	B8	1	J9-59				11	J5-12	
	B9	1	J9-88				54	J4-8	
	B10	1	J9-89				57	J4-2	
	B11	1	J9-54				53	J4-12	
	B12	1	J9-27				36	J4-86	
	B13	1	J9-83				55	J4-11	
	B14	1	J9-47				43	J3-85	
	B15	1	J9-14				5	J6-2	
	B16	1	J9-4				22	J7-7	
	B17	1	J9-15				7	J6-10	
	B18	1	J9-12				26	J6-90	
	B19	1	J9-32				2	J6-8	
	B20	1	J9-26				38	J4-85	
	B21	1	J9-55				8	J6-1	
	B22	1	J9-46				48	J2-85	
	B23	1	J9-84				3	J6-11	
	B24	1	J5-72				52	J1-85	
	B25	1	J9-5				21	J7-5	
	B26	1	J9-3				42	J3-89	
	B27	1	J9-16				60	J3-15	
	B28	1	J9-11				29	J5-91	
	B29	1	J9-33				59	J3-20	
	B30	1	J9-25				31	J5-86	
	B31	1	J9-56				61	J3-21	
	B32	1	J9-45				27	J6-86	
	B33	1	J9-79				25	J12-211	
	B34	1	J9-71				46	J2-86	
	B35	1	J9-1				20	J7-3	
	B36	1	J9-2				49	J1-90	
	B37	1	J9-6				14	J5-15	
	B38	1	J9-10				35	J4-90	
	B39	1	J9-17				10	J5-20	
	B40	1	J9-24				34	J4-91	
	B41	1	J9-34				18	J5-21	
	B42	1	J9-44				41	J3-86	
	B43	1	J9-49				25	J12-206	
	B44	1	J9-70				50	J1-86	
	B45	1	J9-51				25	J12-212	
	B46	1	J9-8				19	J7-2	
	B47	1	J9-7				24	J7-11	
	B48	1	J9-9				51	J1-89	
	B49	1	J9-18				28	J6-85	
	B50	1	J9-23				37	J4-89	
	B51	1	J9-35				12	J5-11	
	B52	1	J9-43				39	J3-91	
	B53	1	J9-58				17	J5-1	
	B54	1	J9-69				33	J5-85	
	B55	1	J9-78				25	J12-198	
	B56	1	J9-21				23	J7-9	
	B57	1	J9-36				6	J6-6	
	B58	1	J9-22				45	J2-90	
	B59	1	J9-48				25	J12-200	
	B60	1	J9-42				30	J5-90	
	B61	1	J9-77				25	J12-188	
	B62	1	J9-68				44	J2-91	
	B63	1	J9-30				25	J12-180	
	B64	1	J9-57				64	J2-1	
	B65	1	J9-60				4	J6-3	
	B66	1	J9-40				25	J12-193	
	B67	1	J9-38				25	J12-194	TWIST
	B68	1	J9-41				47	J2-89	
	B69	1	J9-76				25	J12-205	
	B70	1	J9-67				32	J5-89	
	B71	1	J9-90				9	J6-5	
	B72	1	J9-64				65	J1-3	
	B73	1	J9-63				25	J12-181	
	B74	1	J9-65				25	J12-186	
	B75	1	J9-62				63	J2-10	
	B76	1	J9-66	WHITE	26	1	40	J3-50	

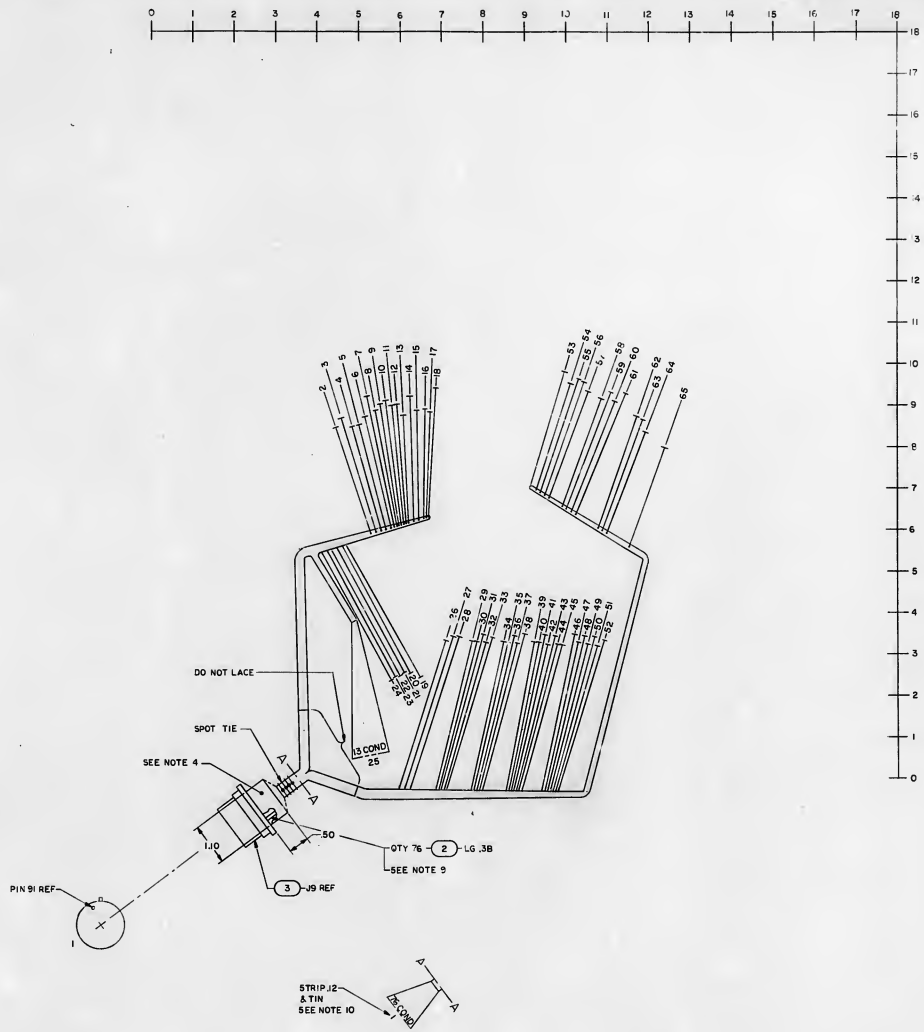

NOTES

1. INTERPRET DRAWING IN ACCORDANCE WITH STANDARDS PRESCRIBED BY MIL-D-70327
2. FABRICATE PER ND1002032
3. STRIP ALL LEADS 1.12 AND DO NOT TIN UNLESS OTHERWISE SPECIFIED
4. POT INDICATED AREA PER ND1002236
5. AR DENOTES AS REQUIRED
6. IDENTIFY WITH DRAWING NO. & REVISION PER ND1002019
7. PARTIAL REFERENCE DESIGNATIONS ARE SHOWN; PREFIX DESIGNATION WITH UNIT NUMBER OR ASSEMBLY DESIGNATION OR BOTH
8. LACE ENTIRE HARNESS CONFIGURATION UNLESS OTHERWISE SPECIFIED USING FIND NO. 4
9. DO NOT APPLY HEAT GREATER THAN 250° F TO FIND NO. 2
10. SOLDER PER ND1002071 USING ND1002075

* DENOTES LENGTH IN FEET

QTY PER UNIT	PART OR IDENTIFYING NO	NOMENCLATURE OR DESCRIPTION
AR	012507-003	TAPE, LACING
1	1006348-001	CONNECTOR, RECEPTACLE
* 2.5	1006322-004	SLEEVING, INSULATION
* 142	1010807-22	WIRE, INSULATED

LIST OF MATERIALS

MIT INSTRUMENTATION LAB CAMBRIDGE, MASS.

UNLESS OTHERWISE SPECIFIED DIMENSIONS ARE IN INCH. TOLERANCES ON FRACTIONS ±1/64 DECIMALS ±.06 ANGLES ±1°. DO NOT SCALE THIS DRAWING. MATERIAL. HEAT TREATMENT. FINAL FINISH.

DRAWN DATE
CHECKED
APPROVAL
APPROVAL
NASA APPROVAL
MIT APPROVAL

MANNED SPACECRAFT CE
HOUSTON, TEXAS

WIRING HARNESS, BR
AGC DSKY

2003904
NEXT ASSY | USED ON
APPLICATION

CODE IDENT NO 80230 | SIZE J | NASA DRAW 2003
SCALE 1/1 | WT

2003930

2003930

REVISIONS			
SYM	DESCRIPTION	DATE	APPROVAL

ASSEMBLY INFORMATION CHART

REMARKS	FROM COND IDENT	FROM STA NO.	FROM DESTINATION	COLOR	AWG	FIND NO	TO STA NO.	TO DESTINATION	REMARKS
	B1		J9-37	WHITE	26	1	15	J5-6	
	B2		J9-85				58	J3-12	
	B3		J9-87				56	J4-10	
	B4		J9-86				62	J2-11	
	B5		J9-91				16	J5-5	
	B6		J9-28				25	J12-199	
	B7		J9-61				13	J5-3	
	B8		J9-59				11	J5-12	
	B9		J9-88				54	J4-8	
	B10		J9-89				57	J4-2	
	B11		J9-54				53	J4-12	
	B12		J9-27				36	J4-86	
	B13		J9-83				55	J4-11	
	B14		J9-47				43	J3-85	
	B15		J9-14				5	J6-2	
	B16		J9-4				22	J7-7	
	B17		J9-15				7	J6-10	
	B18		J9-12				26	J6-90	
	B19		J9-32				2	J6-8	
	B20		J9-26				38	J5-85	
	B21		J9-55				8	J6-1	
	B22		J9-46				48	J2-85	
	B23		J9-84				3	J6-11	
	B24		J9-72				52	J1-85	
	B25		J9-5				21	J7-5	
	B26	1	J9-3				42	J3-89	
	B27	1	J9-16				60	J3-15	
	B28	1	J9-11				29	J5-91	
	B29	1	J9-33				59	J3-20	
	B30	1	J9-25				31	J5-86	
	B31	1	J9-56				61	J3-21	
	B32	1	J9-45				27	J6-86	
	B33	1	J9-79				25	J12-211	
	B34	1	J9-71				46	J2-86	
	B35	1	J9-1				20	J7-3	
	B36	1	J9-2				49	J1-90	
	B37	1	J9-6				14	J5-15	
	B38	1	J9-10				35	J4-90	
	B39	1	J9-17				10	J5-20	
	B40	1	J9-24				34	J4-91	
	B41	1	J9-34				18	J5-21	
	B42	1	J9-44				41	J3-86	
	B43	1	J9-49				25	J12-206	
	B44	1	J9-70				50	J1-86	
	B45	1	J9-51				25	J12-212	
	B46	1	J9-6				19	J7-2	
	B47	1	J9-7				24	J7-11	
	B48	1	J9-9				51	J1-89	
	B49	1	J9-18				28	J6-85	
	B50	1	J9-23				37	J4-89	
	B51	1	J9-35				12	J5-11	
	B52	1	J9-43				39	J3-91	
	B53	1	J9-58				17	J5-1	
	B54	1	J9-69				33	J5-85	
	B55	1	J9-78				25	J12-198	
	B56	1	J9-21				23	J7-9	
	B57	1	J9-36				6	J6-6	
	B58	1	J9-22				45	J2-90	
	B59	1	J9-48				25	J12-200	
	B60	1	J9-42				30	J5-90	
	B61	1	J9-77				25	J12-189	
	B62	1	J9-68				44	J2-91	
	B63	1	J9-30				25	J12-180	
	B64	1	J9-57				64	J2-1	
	B65	1	J9-60				4	J6-3	
	B66	1	J9-40				25	J12-193	
	B67	1	J9-38				25	J12-194	TWIST
	B68	1	J9-41				47	J2-89	
	B69	1	J9-76				25	J12-205	
	B70	1	J9-67				32	J5-89	
	B71	1	J9-90				9	J6-5	
	B72	1	J9-64				65	J1-3	
	B73	1	J9-63				25	J12-181	
	B74	1	J9-65				25	J12-186	
	B75	1	J9-62				63	J2-10	
	B76	1	J9-66	WHITE	26	1	40	J3-90	

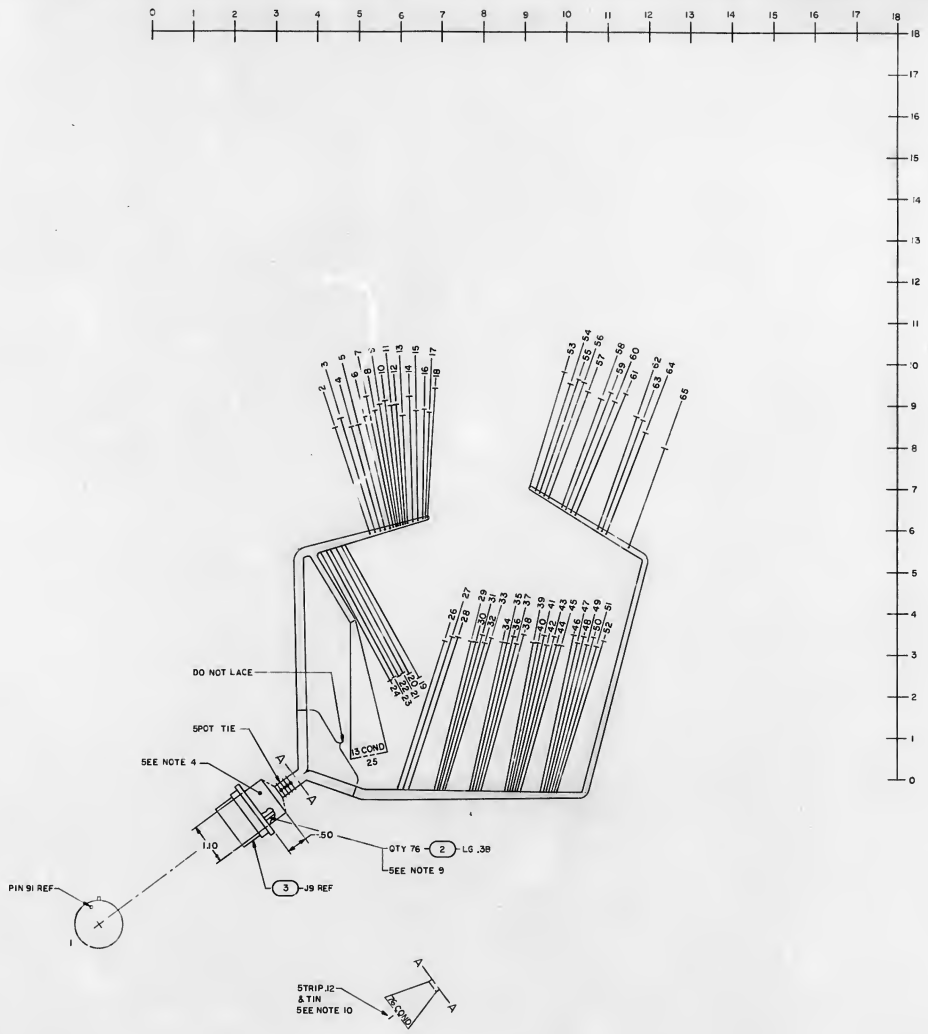

NOTES

1. INTERPRET DRAWING IN ACCORDANCE WITH STANDARDS PRESCRIBED BY MIL-D-70327
2. FABRICATE PER ND1002032
3. STRIP ALL LEADS 1.12 AND DO NOT TIN UNLESS OTHERWISE SPECIFIED
4. POT INDICATED AREA PER ND1002236
5. AR DENOTES AS REQUIRED
6. IDENTIFY WITH DRAWING NO. & REVISION PER ND1002019
7. PARTIAL REFERENCE DESIGNATIONS ARE SHOWN; PREFIX DESIGNATION WITH UNIT NUMBER OR ASSEMBLY DESIGNATION OR BOTH
8. LACE ENTIRE HARNESS CONFIGURATION UNLESS OTHERWISE SPECIFIED USING FIND NO. 4
9. DO NOT APPLY HEAT GREATER THAN 250° F TO FIND NO. 2
10. SOLDER PER ND1002071 USING ND1002075

* DENOTES LENGTH IN FEET

QTY REQD	PART OR IDENTIFYING NO	NOMENCLATURE OR DESCRIPTION	FIND NO.
AR	1012507-003	TAPE, LACING	4
1	1006348-001	CONNECTOR, RECEPTACLE	3
* 2.5	1006322-004	SLEEVING, INSULATION	2
* 142	1010807-22	WIRE, INSULATED	1

-011 LIST OF MATERIALS

UNLESS OTHERWISE SPECIFIED DIMENSIONS ARE IN INCHES TOLERANCE, ON FRACTIONS ± DECIMALS ±.06 ANGLES ± DO NOT SCALE THIS DRAWING MATERIAL	MIT INSTRUMENTATION LAB CAMBRIDGE MASS. DEPT. NO.	MANNED SPACECRAFT CENTER HOUSTON TEXAS
	DRAWN / CHECKED / APPROVAL / APPROVAL / NASA APPROVAL / MIT APPROVAL	WIRING HARNESS, BRANCHED AGC DSKY
2003930	HEAT TREATMENT	CODE IDENT NO. 80230 / SIZE J / NASA DRAWING NO 2003930
NEXT ASSY / USED ON	FINAL FINISH	SCALE 1/1 / WT / SHEET 1 OF 1
APPLICATION		

2003930

SYM	REVISIONS DESCRIPTION	DATE	APPROVAL
A	REVISED PER TDPR 22310 DR [illegible] CHK [illegible]	[illegible]	[illegible]

ASSEMBLY INFORMATION CHART

REMARKS	FROM COND IDENT	FROM STA NO.	FROM DES	DESCRIPTION COLOR	DESCRIPTION AWG	DESCRIPTION FIND NO.	TO STA NO	TO DES	REMARKS
	H1	1	J13-1	WHT	26	9	2	P9-1	
	H2		-2					-2	
	H3		-3					-3	
	H4		-4					-4	
	H5		-5					-5	
	H6		-6					-6	
	H7		-7					-7	
	H8		-8					-8	
	H9		-9					-9	
	H10		-10					-10	
	H11		-11					-11	
	H12		-12					-12	
	H13		-13					-13	
	H14		-14					-14	
	H15		-15					-15	
	H16		-16					-16	
	H17		-17					-17	
	H18		-18					-18	
	H19		-19					-91	
	H20		-20					-20	
	H21		-21					-21	
	H22		-22					-22	
	H23		-23					-23	
	H24		-24					-24	
	H25		-25					-25	
	H26		-26					-26	
	H27		-27					-27	
	H28		-28					-28	
	H29		-29					-29	
	H30		-30					-30	
	H31		-31					-86	
	H32		-32					-32	
	H33		-33					-33	
	H34		-34					-34	
	H35		-35					-35	
	H36		-36					-36	
	H37		-37					-37	
TWIST	H38		-38					-38	T.W.ST
	H40		-40					-40	
	H39		-39					-39	
	H41		-41					-41	
	H42		-42					-42	
	H43		-43					-43	
	H44		-44					-44	
	H45		-45					-45	
	H46		-46					-46	
	H47		-47					-47	
	H48		-48					-48	
	H49		-49					-49	
	H50		-50					-50	
	H51		-51					-51	
	H52		-52					-52	
	H53		-53					-85	
	H54		-54					-54	
	H55		-55					-55	
	H56		-56					-56	
	H57		-57					-57	
	H58		-58					-58	
	H59		-59					-59	
	H60		-60					-60	
	H61		-61					-61	
	H62		-62					-62	
	H63		-63					-63	
	H64		-64					-64	
	H65		-65					-65	
	H66		-66					-66	
	H67		-67					-67	
	H68		-68					-68	
	H69		-69					-69	
	H70		-70					-70	
	H71		-71					-71	
	H72		-72					-72	
	H73		-73					-73	
	H74		-74					-74	
	H75		-75					-75	
	H76		-76					-76	
	H77		-77					-77	
	H78		-78					-78	
	H79		-79					-79	
	H80		-80					-87	
	H81		-81					-88	
	H82		-82					-89	
	H83		-83					-83	
	H84		-84					-84	
	H85	1	J13-85	WHT	26	9	2	P9-90	

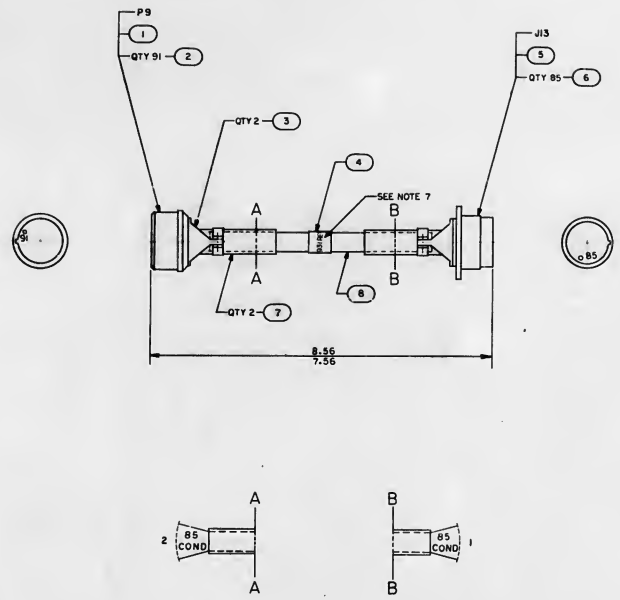

REFERENCE DRAWING
1. 2005951 INTERCONNECTING DIAGRAM

NOTES:
1. INTERPRET DRAWING IN ACCORDANCE WITH STANDARDS PRESCRIBED BY MIL-D-70327
2. FABRICATE PER ND1002032
3. STRIP ALL LEADS .25
4. AP DENOTES AS REQUIRED
5. IDENTIFY WITH PART NO. PER ND1002019
6. PARTIAL REFERENCE DESIGNATIONS ARE SHOWN. PREFIX THE DESIGNATION WITH UNIT NUMBER OR ASSEMBLY DESIGNATION OR BOTH
7. MARK .060/.100 HIGH WHITE CHARACTERS PER ND1002019 CENTRALIZE AS SHOWN
8. MIL-I-631, TYPE F, FORM U2, GRADE A, CLASS 1, AWG SIZE 1/2
9. CRIMP PER ND1002206

QTY REQD	PART OR IDENTIFYING NO.	NOMENCLATURE OR DESCRIPTION	FIND NO
AP	1010416-20	WIRE, ELEC	9
* .416	SEE NOTE 8	INSULATION SLEEVING	8
2	M5390057-6	BUSHING, SLEEVE	7
85	1010770-1	CONTACT	6
1	1010937-103	CONNECTOR, RECEPTACLE, ELEC	5
1	M5180035-1	STRAP, CABLE	4
2	1010933-105	CLAMP, CABLE	3
91	1010770-2	CONTACT	2
1	1010771-081	CONNECTOR, PLUG, ELEC	1

LIST OF MATERIALS

* DENOTES LENGTH IN FEET

UNLESS OTHERWISE SPECIFIED DIMENSIONS ARE IN INCHES
TOLERANCES ON
FRACTIONS ± DECIMALS ± ANGLES ±
DO NOT SCALE THIS DRAWING
MATERIAL
HEAT TREATMENT
FINAL FINISH

2003900
NEXT ASSY | USED ON
APPLICATION

GTY INSTRUMENTATION LAB Cambridge, Mass
DRAWN [illegible] DATE [illegible]
CHECKED [illegible] DATE [illegible]
APPROVAL [illegible]
APPROVAL [illegible]
NASA APPROVAL [illegible]
MIT APPROVAL [illegible]

MANNED SPACECRAFT CENTER
HOUSTON, TEXAS

ADAPTER CABLE
AGC DSKY

CODE IDENT NO 80230 | SIZE E | NASA DRAWING NO 2003931
SCALE 1/1 | WT | SHEET 1 OF 1

SYM	DESCRIPTION	DATE	APPROVAL
	REVISIONS ROPER		

ASSEMBLY INFOPMATION CHART

FROM REMARKS	FROM COND IDENT	FROM STA NO.	FROM DES	DESCRIPTION COLOR	DESCRIPTION AWG	DESCRIPTION FIND NO.	TO STA NO	TO DES	TO REMARKS
	H1	1	J13-1	WHT	26	9	2	P9-1	
	H2		-2					-2	
	H3		-3					-3	
	H4		-4					-4	
	H5		-5					-5	
	H6		-6					-6	
	H7		-7					-7	
	H8		-8					-8	
	H9		-9					-9	
	H10		-10					-10	
	H11		-11					-11	
	H12		-12					-12	
	H13		-13					-13	
	H14		-14					-14	
	H15		-15					-15	
	H16		-16					-16	
	H17		-17					-17	
	H18		-18					-18	
	H19		-19					-19	
	H20		-20					-20	
	H21		-21					-21	
	H22		-22					-22	
	H23		-23					-23	
	H24		-24					-24	
	H25		-25					-25	
	H26		-26					-26	
	H27		-27					-27	
	H28		-28					-28	
	H29		-29					-29	
	H30		-30					-30	
	H31		-31					-31	
	H32		-32					-32	
	H33		-33					-33	
	H34		-34					-34	
	H35		-35					-35	
	H36		-36					-36	
	H37		-37					-37	
TWIST	H38		-38					-38	TWIST
	H40		-40					-40	
	H39		-39					-39	
	H41		-41					-41	
	H42		-42					-42	
	H43		-43					-43	
	H44		-44					-44	
	H45		-45					-45	
	H46		-46					-46	
	H47		-47					-47	
	H48		-48					-48	
	H49		-49					-49	
	H50		-50					-50	
	H51		-51					-51	
	H52		-52					-52	
	H53		-53					-53	
	H54		-54					-54	
	H55		-55					-55	
	H56		-56					-56	
	H57		-57					-57	
	H58		-58					-58	
	H59		-59					-59	
	H60		-60					-60	
	H61		-61					-61	
	H62		-62					-62	
	H63		-63					-63	
	H64		-64					-64	
	H65		-65					-65	
	H66		-66					-66	
	H67		-67					-67	
	H68		-68					-68	
	H69		-69					-69	
	H70		-70					-70	
	H71		-71					-71	
	H72		-72					-72	
	H73		-73					-73	
	H74		-74					-74	
	H75		-75					-75	
	H76		-76					-76	
	H77		-77					-77	
	H78		-78					-78	
	H79		-79					-79	
	H80		-80					-87	
	H81		-81					-88	
	H82		-82					-89	
	H83		-83					-83	
	H84		-84					-84	
	H85	1	J13-85	WHT	26	9	2	P9-90	

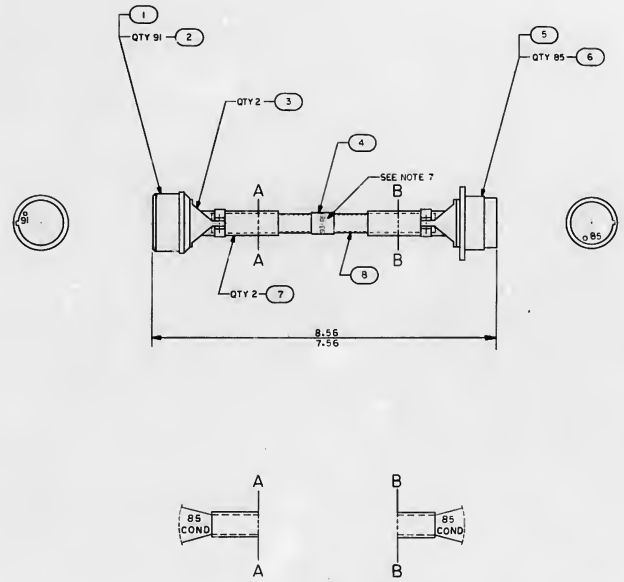

REFERENCE DRAWING
1. 2005951 INTERCONNECTING DIAGRAM

NOTES:
1. INTERPRET DRAWING IN ACCORDANCE WITH STANDARDS PRESCRIBED BY MIL-D-70327
2. FABRICATE PER ND1002032
3. STRIP ALL LEADS .25
4. AR DENOTES AS REQUIRED
5. IDENTIFY WITH DRAWING NO. & REVISION PER ND1002019
6. PARTIAL REFERANCE DESIGNATIONS ARE SHOWN. PREFIX THE DESIGNATION WITH UNIT NUMBER OR ASSEMBLY DESIGNATION OR BOTH
7. MARK .060/.100 HIGH WHITE CHARACTERS PER ND1002019 CENTRALIZE AS SHOWN

AR	1010416-20	WIRE, ELEC	9
* .416	1006322-045	INSULATION SLEEVING	8
2	MS39057-6	BUSHING, SLEEVE	7
85	1010770-1	CONTACT	6
1	1010937-103	CONNECTOR, RECEPTACLE, ELEC	5
1	MS18035-1	STRAP, CABLE	4
2	1010933-105	CLAMP, CABLE	3
91	1010770-2	CONTACT	2
1	1010771-001	CONNECTOR, PLUG, ELEC	1
QTY REQD	PART OR IDENTIFYING NO.	NOMENCLATURE OR DESCRIPTION	FIND NO.

LIST OF MATERIALS

*DENOTES LENGTH IN FEET

2003900	NEXT ASSY	USED ON
APPLICATION		

UNLESS OTHERWISE SPECIFIED DIMENSIONS ARE IN INCHES
TOLERANCES ON FRACTIONS ± DECIMALS ± ANGLES ±
DO NOT SCALE THIS DRAWING
MATERIAL
HEAT TREATMENT
FINAL FINISH

M I T INSTRUMENTATION LAB Cambridge Mass. DIV NO. COMPANY
DRAWN L. Strand DATE 6/29/66
CHECKED Robert Ridgway
APPROVAL
APPROVAL Robert C. Hoell 11/29/66
NASA APPROVAL
MIT APPROVAL

MANNED SPACECRAFT CENTER
HOUSTON, TEXAS

ADAPTER CABLE
AGC DSKY

CODE IDENT NO. 80230 | SIZE E | NASA DRAWING NO. 2003931
SCALE 3/1 | WT | SHEET 1 OF 1

2003931

REVISIONS 21877

SYM	ZONE	DESCRIPTION	DR	CHK	DATE	APPROVED
A		REVISED PER TDRR 22312	W.D.		9/6/65	

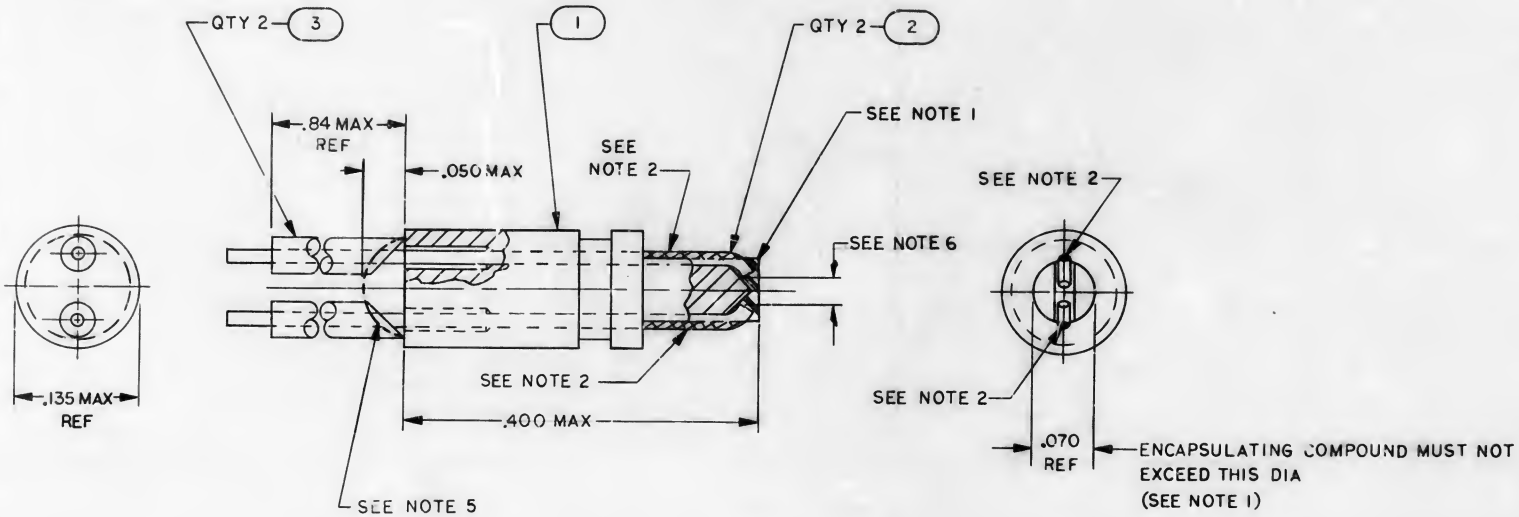

NOTES

1. AREA TO BE FILLED PER ND1002004 TYPE IV
2. WIRE CONTACT AREA TO BE FREE OF EPOXY
3. IDENTIFY WITH PART NO. PER ND1002019
4. INTERPRET DRAWING IN ACCORDANCE WITH STANDARDS PRESCRIBED BY MIL-D-70327
5. ENCAPSULATE AREA SHOWN USING 1006341 (RTV 112)
6. NO AIR VOIDS TOLERATED IN THIS AREA

QTY REQD	PART OR IDENTIFYING NO.	MATERIAL OR NOTES	NOMENCLATURE OR DESCRIPTION	FIND NO.
2	2004962		INSULATION, SLEEVING	3
2	2004966		WIRE, PLUG CONTACT	2
1	2004963		PLUG	1

011 LIST OF MATERIALS

NEXT ASSY	USED ON
2003975	

APPLICATION

UNLESS OTHERWISE SPECIFIED
DIMENSIONS ARE IN INCHES
CAPACITOR VALUES ARE IN μf
RESISTOR VALUES ARE IN OHMS
TOLERANCES ON
FRACTIONS ± DECIMALS ± ANGLES ±
DO NOT SCALE THIS DRAWING

MATERIAL

MIT INSTRUMENTATION LAB
CAMBRIDGE, MASS.

DRAWN K.W. Simpson 6JUL65
CHECKED 10 Sep 65
APPROVED 13 Sep 65
APPROVED Eldon C Hall 24 Sep 65
APPROVED MIT
APPROVED MSC
DATE

MANNED SPACECRAFT CENTER
HOUSTON, TEXAS

PLUG ASSEMBLY
PUSH BUTTON SWITCH
AGC DSKY

CODE IDENT NO. 80230
SIZE C
DRAWING NO. 2003932
SCALE 10/1
SHEET 1 OF 1

COND IDENT	REMARKS	FROM	FIND NO.	COLOR	SIZE AWG	LENGTH	TO	REMARKS
G1	SEE NOTE 8	* J1-3	6	WHT	26	AR	J2-3	SEE NOTE 8
G2		* J3-3	6	〃	〃	〃	J3-9	
G3		* J5-10		〃			J6-9	
G4		* J2-10		〃			J3-10	
G5		* J3-64		〃			J5-9	
G6		* J2-68		〃			J3-68	
G7		* J4-68		〃			J5-68	
G8		* J6-68		〃			J7-1	
G9		J1-48					J2-68	
G10		J3-68					J4-68	
G11		J5-68	〃	〃	〃	〃	J6-68	
G12		J7-1	6	WHT	26	AR	G1	SEE NOTE 13

* DENOTES WIREWRAP MUST BE FIRST LEVEL

DETAIL A
SCALE 10/1
756 PLACES

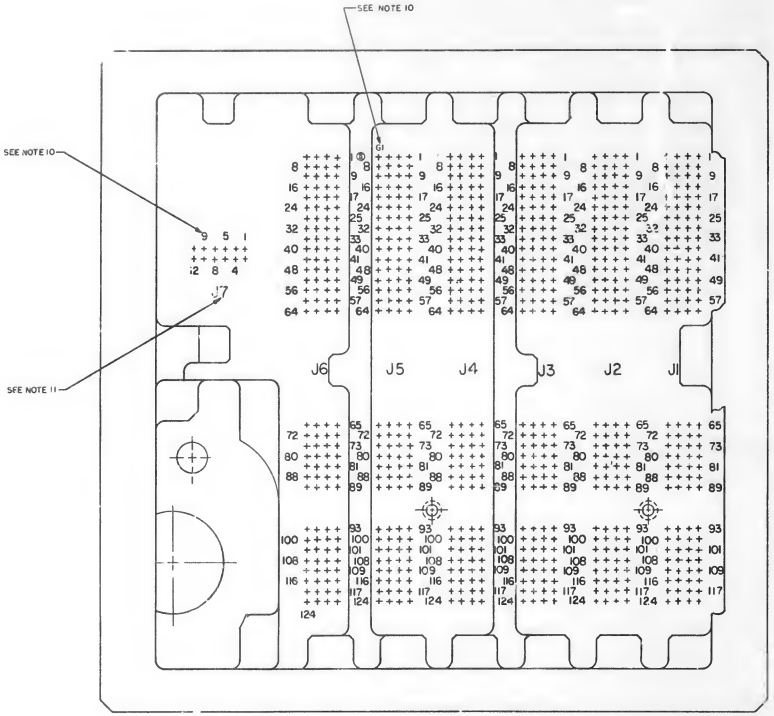

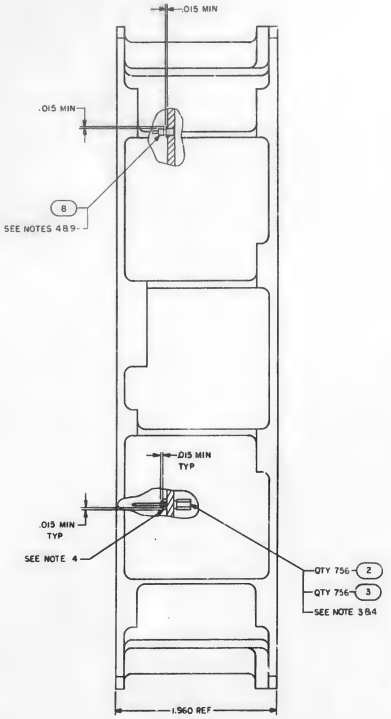

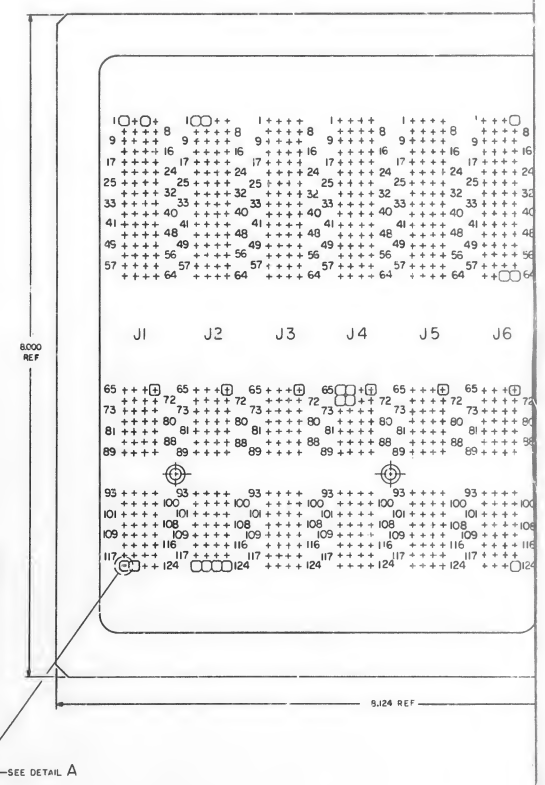

NOTES

1. INTERPRET DRAWING IN ACCORDANCE WITH STANDARDS PRESCRIBED BY MIL-D-70327
2. MARK .050/.070 HIGH BLACK CHARACTERS PER ND1002019 AND ND1002122, TYPE II. CLASS 2, USING INK 1006271-1 CENTRALIZE AS SHOWN
3. ASSEMBLE FIND NO.2 AND 3 TO FIND NO.1 PER ND1002136
4. SEAL FIND NO.2, 3 AND 8 TO FIND NO.1 PER ND1002004, TYPE XI
5. MARK .110/.130 HIGH BLACK CHARACTERS PER ND1002019 AND ND1002122, TYPE II, CLASS 2, USING INK 1006271-1. CENTRALIZE AS SHOWN
6. IDENTIFY WITH PART NO. PER ND1002019
7. AR DENOTES AS REQUIRED
8. WIREWRAP FIND NO.4 AND FIND NO.6 USING CHART AND WIREWRAP CARD DECK 2005906 AND PER ND1002031 EXCEPT FIND NO.6 TO HAVE 5 MIN TO 6 MAX TURNS OF UNINSULATED WIRE, 1/2 TO 1 1/2 TURNS OF INSULATED WIRE, STRIP LENGTH OF 1.187 TO 1000, STRIP FORCE OF 5 LB MIN.
9. MOUNTING TORQUE FOR FIND NO.8 TO BE 15-20 IN.OUNCES
10. MARK .050/.080 HIGH WHITE CHARACTERS PER ND1002019 AND ND1002122, TYPE II CLASS 2, USING INK 1006271-1 CENTRALIZE AS SHOWN
11. MARK .110/.130 HIGH WHITE CHARACTERS PER ND1002019 AND ND1002122, TYPE II CLASS 2, USING INK 1006271-1 CENTRALIZE AS SHOWN
12. ~~COLOR OF FIND NO. 4 TO BE OPTIONAL~~
13. ~~SEE ND1002005~~

2003935
NEXT ASSY | USED ON
APPLICATION

2003947 A

COND IDENT	REMARKS	FROM	FIND NO.	COLOR	SIZE AWG	LENGTH	TO	REMARKS
61	SEE NOTE 8	* J1-3	6	WHT	26	AR	J2-3	SEE NOTE 8
62		* J3-3					J3-9	
63		* J5-10					J6-9	
64		* J2-10					J3-10	
65		* J3-64					J5-9	
66		* J2-68					J3-68	
67		* J4-68					J5-68	
68		* J6-68					J7-1	
69		J1-68					J2-68	
610		J3-68					J4-68	
611		J5-68					J6-68	
612		J7-1	6	WHT	26	AR	61	SEE NOTE 13

* DENOTES WIREWRAP MUST BE FIRST LEVEL

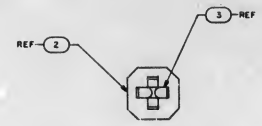

DETAIL A
SCALE 10/1
756 PLACES

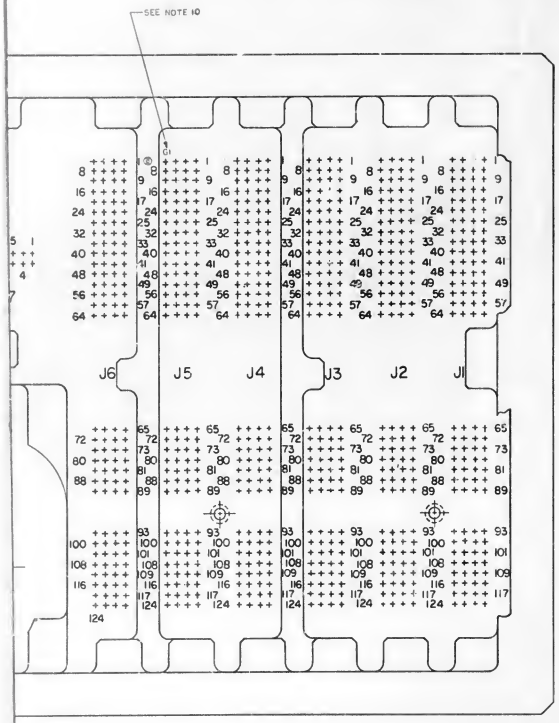

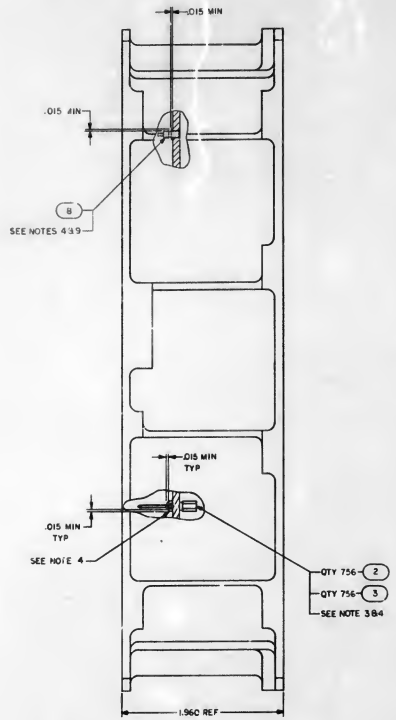

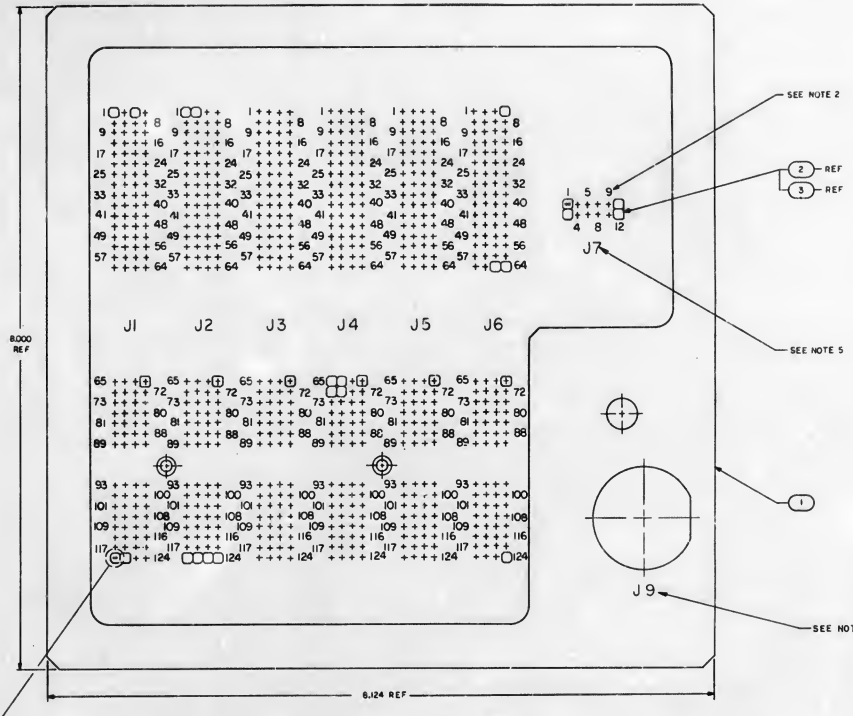

	2005953		INTERCONNECTING DIAGRAM	REF
	2005906		WIREWRAP CARD DECK	REF
1	2004079		TERMINAL, THREADED	9
2	1006818		SLEEVE, GROUNDING	7
AR	1010801-22		WIRE, ELEC	6
7	1006818-003		CONTACT, WRAPOST-FEMALE, GRD	6
AR	1006376-003		WIRE, ELEC	4
756	1006781-4		CONTACT, WRAPOST-FEMALE	3
756	1006774		INSULATOR, WRAPOST-FEMALE	2
1	2004795		PLATE, IDM	1
QTY REQD	PART OR ID. STAMPING NO	MATERIAL OF NOTES	NOMENCLATURE OR DESCRIPTION	FIND NO.

011 LIST OF MATERIALS

MIT INSTRUMENTATION LAB C. STARK DRAPER CAMBRIDGE MASS

MANNED SPACECRAFT CENTER HOUSTON TEXAS

DRAWN A.S. Brown 11-6-68
CHECKED 11-6-68
APPROVED 11-6-68
APPROVED MIT 11-6-68
APPROVED MSC

WIREWRAP IDM PLATE ASSY
MAIN HOUSING
AGC DSKY

CODE IDENT NO 80230 SIZE J DRAWING NO. 2003947

SCALE 2/1 SHEET 1 OF 1

UNLESS OTHERWISE SPECIFIED DIMENSIONS ARE IN INCHES CAPACITOR VALUES ARE IN µf RESISTOR VALUES ARE IN OHMS TOLERANCES ON FRACTIONS DECIMALS ANGLES DO NOT SCALE THIS DRAWING

MATERIAL

2003939 NEXT ASSY USED ON APPLICATION

2003947 A

PER ND100203

2003948 D

REVISIONS 26205

SYM	ZONE	DESCRIPTION	DR	CHK	DATE	APPROVED
A		REVISED PER TDRR 27552				
B		REVISED PER TDRR 27739				
C		REVISED PER TDPR 28252				
D		REVISED PER TDRR 29216				

JUMPER LIST

COND IDENT	REMARKS	FROM	FIND NO.	COLOR	SIZE AWG	LENGTH	TO	REMARKS
F1	SEE NOTE 6	J8-4	6	SEE NOTE 10	30	AR	P12-188	SEE NOTE 8
F2		-7					-198	
F3		-12					-199	
F4		-23					-180	
F5		-28					-206	
F6		-29					-200	
F7		-31					-205	
F8		-32					-212	
F9		-33					-211	
F10		J8-1	6		30	AR	P12-184 *	

* DENOTES MUST BE LOWER LEVEL

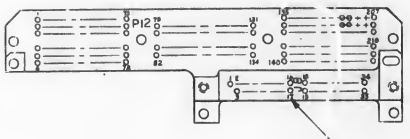

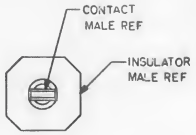

DETAIL A
SCALE 10/1
212 PLACES

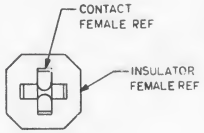

DETAIL B
SCALE 10/1
35 PLACES

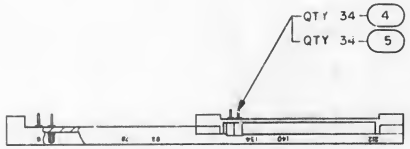

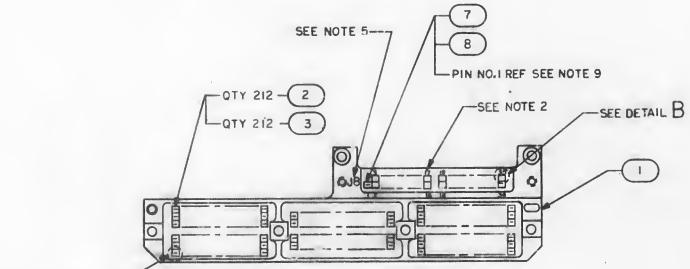

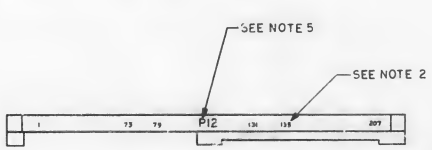

NOTES

1. INTERPRET DRAWING IN ACCORDANCE WITH STANDARDS PRESCRIBED BY MIL-D-70327
2. MARK APPROX.WHERE SHOWN .07/.05 HIGH BLACK CHARACTERS PER ND1002019 AND ND1002122 TYPE II, CLASS 2 USING INK 1006271-11
3. IDENTIFY WITH PART NO. PER ND1002019
4. ASSEMBLE FIND NO.2 THRU 5,7&8 TO FIND NO.1 PER ND1002136
5. MARK APPROX WHERE SHOWN .13/.11 HIGH BLACK CHARACTERS PER ND1002019 AND ND1002122 TYPE II, CLASS 2 USING INK 1006271-11
6. WIREWRAP USING JUMPER LIST PER ND1002031
7. AR DENOTES
8. WELD PER ND1002005
9. INSTALL FIND NO.7&8 IN PIN POSITION NO.1 IN J8
10. COLOR OF FIND NO.6 TO BE OPTIONAL

SEE NOTE 10

QTY REQD	PART OR IDENTIFYING NO.	MATERIAL OR NOTES	NOMENCLATURE OR DESCRIPTION	FIND NO.
1	1008819-002		SLEEVE, GROUNDING	8
1	1008818-004		CONTACT, WRAPOST FEMALE GRD	7
AR	1006732		WIRE, ELECTRICAL	6
34	1006774		INSULATOR, WRAPOST FEMALE	5
34	1006771-1		CONTACT, WRAPOST FEMALE	4
212	1006775		INSULATOR, WRAPOST MALE	3
212	1006772-3		CONTACT, WRAPOST MALE	2
1	2004922-011		PLATE, CONNECTOR	1

011 LIST OF MATERIALS

2003949	
NEXT ASSY	USED ON
APPLICATION	

UNLESS OTHERWISE SPECIFIED DIMENSIONS ARE IN INCHES
CAPACITOR VALUES ARE IN μf
RESISTOR VALUES ARE IN OHMS
TOLERANCES ON
FRACTIONS ± DECIMALS ± ANGLES ±
DO NOT SCALE THIS DRAWING

MATERIAL

MIT INSTRUMENTATION LAB
CAMBRIDGE, MASS

DRAWN J. S. Kennedy 7DEC65
CHECKED 3FEB66
APPROVED 3FEB66
APPROVED 11FEB66

APPROVED MIT
APPROVED MSC

MANNED SPACECRAFT CENTER
HOUSTON, TEXAS

CONNECTOR PLATE ASSY
FRONT HOUSING
AGC DSKY

CODE IDENT NO.	SIZE	DRAWING NO.
80230	D	2003948

DATE
SCALE 1/1
SHEET 1 OF 1

2003950 A

REVISIONS			
SYM	DESCRIPTION	DATE	APPROVAL
A	REVISED PER TDRR 27551 DR CHK APPD		

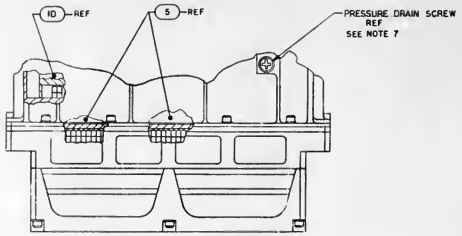

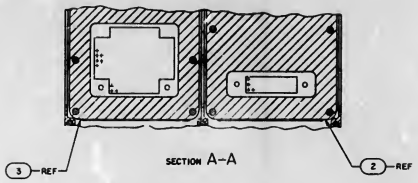

SECTION A-A

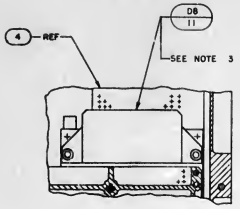

PARTIAL SECTION B-B

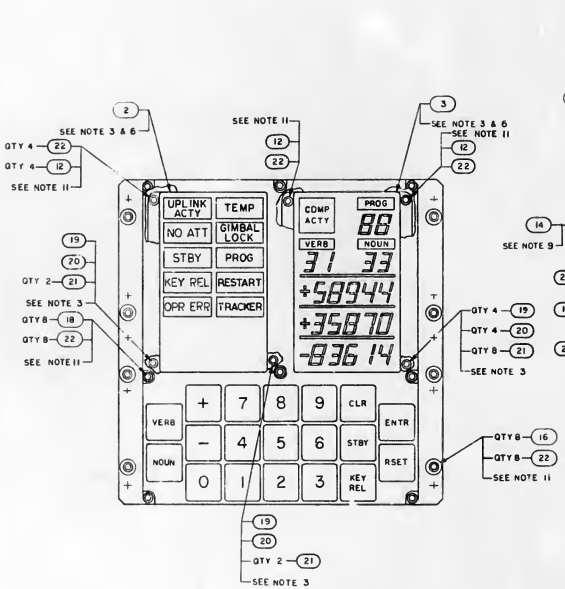

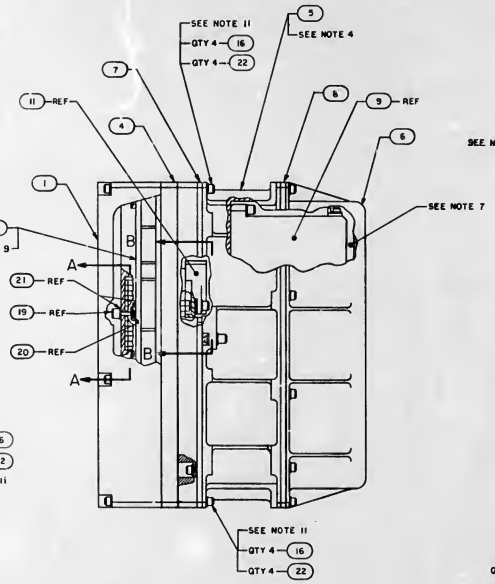

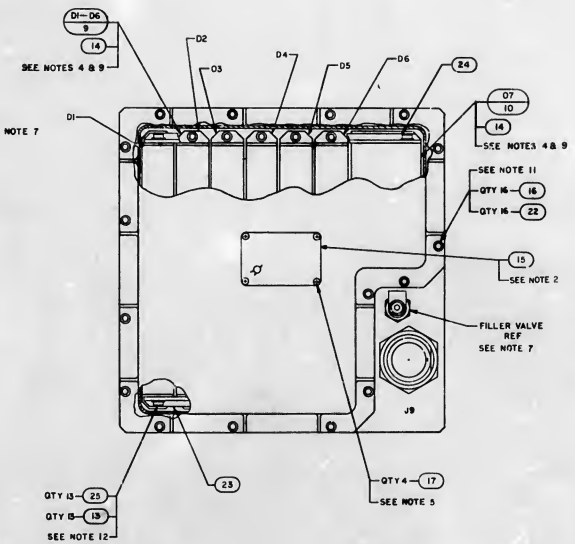

NOTES

1. INTERPRET DRAWING IN ACCORDANCE WITH STANDARDS PRESCRIBED BY MIL-D-70327
2. MARK AGC DSKY ASSEMBLY AND ITS RESPECTIVE PART NO., SERIAL NO., AND CONTRACT NO. MARKING TO BE PER ND1002019 AND SERIALIZE PER ND1002023
3. MOUNTING TORQUE FOR FIND NO. 19 AND JACK SCREWS OF FIND NO. 11 TO BE 8.5-9.5 INCH POUNDS
4. MOUNTING TORQUE FOR JACK SCREWS OF FIND NO. 5, 9 & 10 TO BE 15-19 INCH POUNDS
5. APPLY SEALING COMPOUND MIL-S-22473 GRADE HV TO FIND NO. 17
6. FIND NO. 2 AND 3 TO BE ASSEMBLED TO HEIGHT OF BONDED RUBBER OF FIND NO. 4 USING FIND NO. 19. BEFORE INSTALLING FIND NO. 12, ASSEMBLE IN AN ENVIRONMENT HAVING A TEMPERATURE OF 72° ±5° AND A RELATIVE HUMIDITY OF 50% OR LESS
7. FILL WITH A MINIMUM OF 87% NITROGEN AND 8.7% HELIUM AND A MAXIMUM OF 4.3% AIR TO 1.05/1.10 ATMOSPHERES. DO NOT EXCEED 2 ATMOSPHERES DURING PRESSURIZATION
8. COMPLETED ASSEMBLY SHALL BE TESTED IN ACCORDANCE WITH AND SHALL MEET ALL THE REQUIREMENTS OF PS2C03950
9. APPLY FIND NO. 14 TO MATING SURFACES OF FIND NO. 4, 9 AND 10 DO NOT APPLY TO BONDED RUBBER OF FIND NO. 4.
10. AR DENOTES AS REQUIRED
11. MOUNTING TORQUE FOR FIND NO. 16, 18 AND 12 TO BE 8-9 INCH POUNDS
12. MOUNTING TORQUE FOR FIND NO. 13 TO BE 3.5-4.5 INCH POUNDS

QTY REQD	PART OR IDENTIFYING NO	NOMENCLATURE OF DESCRIPTION	FIND NO.
	2003956	OUTLINE DRAWING	REF
	2005957	SIGNAL PIN ASSIGNMENT	REF
	2005953	INTERCONNECTING DIAGRAM	REF
	2005918	SIGNAL FLOW DIAGRAM	REF
13	NAS620C4	WASHER, FLAT	25
1	2004958	BRACKET, MODULE	24
1	2004959	BRACKET, MODULE	23
46	NAS620C6	WASHER, FLAT	22
12	1004546-4	WASHER, FLAT	21
6	MS16633-4014	RING, RETAINING	20
6	2004952-001	SCREW, JACKING	19
8	1001489-59	SCREW, HEX SOCKET HEAD	18
4	MS35216-1	SCREW, PAN HEAD, CROSS RECESSED	17
32	MS16995-18	SCREW, HEX SOCKET HEAD	16
1	1003260-20	NAMEPLATE	15
AR	1006879	SILICONE COMPOUND	14
13	MS16995-10	SCREW, HEX SOCKET HEAD	13
6	MS16995-20	SCREW, HEX SOCKET HEAD	12
1	2003909-021	KEYBOARD MODULE ASSY D8	11
1	2003901-021	POWER SUPPLY ASSY MODULE D7	10
6	2003952-021	INDICATOR DRIVER MODULE D1-D6	9
1	1006349	GASKET, BONDED, RUBBER	8
1	1006350	GASKET, BONDED, RUBBER	7
1	2004900	COVER, REAR	6
1	2003955-011	MAIN HOUSING ASSY	5
1	2003949-011	FRONT HOUSING ASSY	4
1	1006315	INDICATOR, DIGITAL	3
1	1006387	INDICATOR, ALARM	2
1	2004929-011	COVER, FRONT	1

011 LIST OF MATERIALS

MASTER

NEXT ASSY	USED ON	APPLICATION	

UNLESS OTHERWISE SPECIFIED DIMENSIONS ARE IN INCHES TOLERANCES ON FRACTIONS ± DECIMALS ± ANGLES ±
DO NOT SCALE THIS DRAWING
MATERIAL
HEAT TREATMENT
FINAL FINISH

MIT INSTRUMENTATION LAB CAMBRIDGE MASS
DRAWN
CHECKED
APPROVED
APPROVED
NASA APPROVAL A. C. McCORMICK
MIT APPROVAL

MANNED SPACECRAFT CENTER HOUSTON TEXAS

AGC DSKY ASSEMBLY

CODE IDENT NO 80230 | SIZE J | NASA DRAWING NO 2003950
SCALE 1/1 | WT | SHEET 1 OF 1

2003950 A

REVISED PER			
SYM	DESCRIPTION	DATE	APPROVAL
A	REVISED PER TDRR 27551 DR CHK ART. A. APPD		
B	REVISED PER TDRR 28172 DR CHK J. J. APPD		

2003950 B

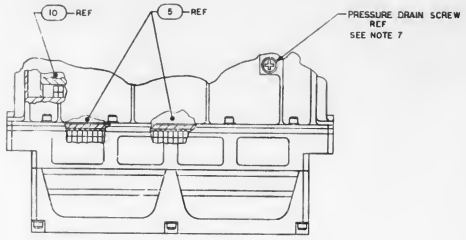

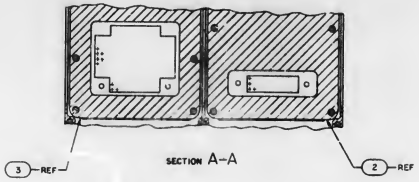

SECTION A–A

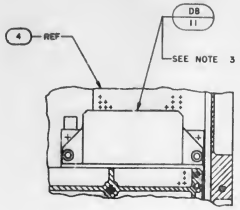

PARTIAL SECTION B–B

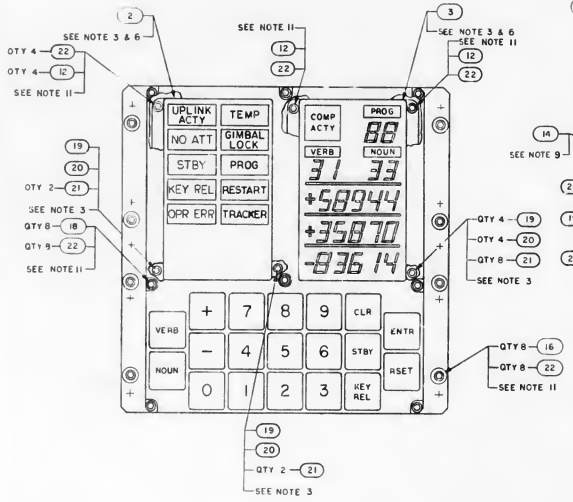

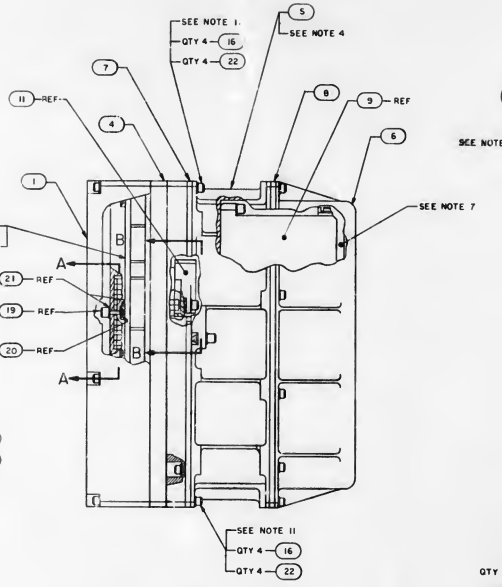

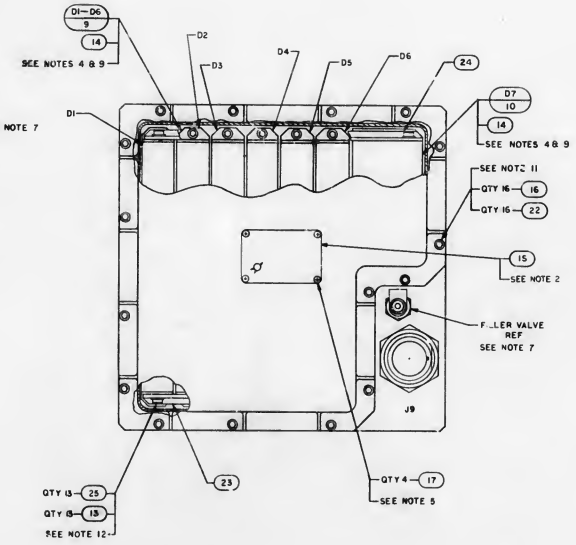

NOTES

1. INTERPRET DRAWING IN ACCORDANCE WITH STANDARDS PRESCRIBED BY MIL-D-70327
2. MARK AGC DSKY ASSEMBLY AND ITS RESPECTIVE PART NO., SERIAL NO., AND CONTRACT NO. MARKING TO BE PER NDI002019 AND SERIALIZE PER NDI002023
3. MOUNTING TORQUE FOR FIND NO. 19 AND JACK SCREWS OF FIND NO. 11 TO BE 8.5–9.5 INCH POUNDS
4. MOUNTING TORQUE FOR JACK SCREWS OF FIND NO. 5, 9 & 10 TO BE 15–19 INCH POUNDS
5. APPLY SEALING COMPOUND MIL-S-22473 GRADE HV TO FIND NO. 17
6. FIND NO. 2 AND 3 TO BE ASSEMBLED TO HEIGHT OF BONDED RUBBER OF FIND NO. 4 USING FIND NO. 19. BEFORE INSTALLING FIND NO. 12, ASSEMBLE IN AN ENVIRONMENT HAVING A TEMPERATURE OF 72° ±5° AND A RELATIVE HUMIDITY OF 50% OR LESS
7. FILL WITH A MINIMUM OF 87% NITROGEN AND 8.7% HELIUM AND A MAXIMUM OF 4.3% AIR TO 1.05/1.10 ATMOSPHERES. DO NOT EXCEED 2 ATMOSPHERES DURING PRESSURIZATION
8. COMPLETED ASSEMBLY SHALL BE TESTED IN ACCORDANCE WITH AND SHALL MEET ALL THE REQUIREMENTS OF PS2003950
9. APPLY FIND NO. 14 TO MATING SURFACES OF FIND NO. 4, 9 AND 10 DO NOT APPLY TO BONDED RUBBER OF FIND NO. 4.
10. AR DENOTES AS REQUIRED
11. MOUNTING TORQUE FOR FIND NO. 16, 18 AND 12 TO BE 8–9 INCH POUNDS
12. MOUNTING TORQUE FOR FIND NO. 18 TO BE 3.5–4.5 INCH POUNDS

	2003956	OUTLINE DRAWING	REF
	2005957	SIGNAL PIN ASSIGNMENT	REF
	2005953	INTERCONNECTING DIAGRAM	REF
	2005918	SIGNAL FLOW DIAGRAM	REF
13	NAS620C4	WASHER, FLAT	25
1	2004958	BRACKET, MODULE	24
1	2004959	BRACKET, MODULE	23
46	NAS620C6	WASHER, FLAT	22
12	1004146-4	WASHER, FLAT	21
7	MS16633-4014	RING, RETAINING	20
6	2004932-001	SCREW, JACKING	19
8	1001489-59	SCREW, HEX SOCKET HEAD	18
4	MS35216-1	SCREW, PAN HEAD, CROSS RECESSED	17
32	MS16995-18	SCREW, HEX SOCKET HEAD	16
1	1004260-20	NAMEPLATE	15
AR	1006879	SILICONE COMPOUND	14
13	MS16995-10	SCREW, HEX SOCKET HEAD	13
6	MS16995-20	SCREW, HEX. SOCKET HEAD	12
1	2003909-021	KEYBOARD MODULE ASSY D8	11
1	2003901-021	POWER SUPPLY ASSY MODULE D7	10
6	2003952-021	INDICATOR DRIVER MODULE D1–D6	9
1	1006349	GASKET, BONDED, RUBBER	8
1	1006350	GASKET, BONDED, RUBBER	7
1	2004900	COVER, REAR	6
1	2003955-011	MAIN HOUSING ASSY	5
1	2003949-011	FRONT HOUSING ASSY	4
1	1006315-001	INDICATOR, DIGITAL	3
1	1006387-001	INDICATOR, ALARM	2
1	2004929-021	COVER, FRONT	1
QTY REQD	PART OR IDEN. FTNG NO	NOMENCLATURE OF DESCRIPTION	FIND NO

011 LIST OF MATERIALS

		UNLESS OTHERWISE SPECIFIED DIMENSIONS ARE IN INCHES TOLERANCES ON FRACTIONS ± DECIMALS ± ANGLES ± DO NOT SCALE THIS DRAWING MATERIAL	
		HEAT TREATMENT	
NEXT ASSY	USED ON	FINAL FINISH	
APPLICATION			

MIT INSTRUMENTATION LAB CAMBRIDGE MASS. SIZE 11 DRAWN 03-30 DATE 4-5-67 CHECKED APPROVED APPROVAL

NASA APPROVAL A. C. METZGER

MIT APPROVAL

MANNED SPACECRAFT CENTER HOUSTON TEXAS

AGC DSKY ASSEMBLY

CODE IDENT NO 80230 SIZE J NASA DRAWING NO 2003950

SCALE 1/1 WT SHEET 1 OF 1

2003950 B

2003950 C

QTY	DESCRIPTION	DATE	APPROVAL
A	REVISED PER TDRR 27551 DR [illegible] CHK [illegible] APPD [illegible]	[illegible]	
B	REVISED PER TDRR 28178 DR [illegible] CHK [illegible] APPD	[illegible]	
C	REVISED PER TDRR 34492 DR [illegible] CHK [illegible] APPD	[illegible]	

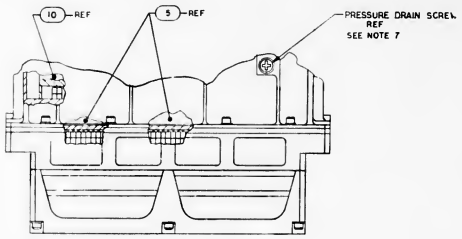

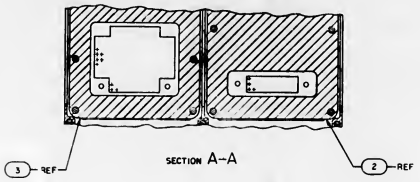

SECTION A-A

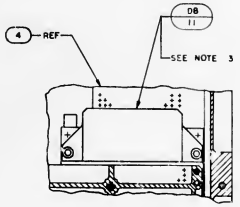

PARTIAL SECTION B-B

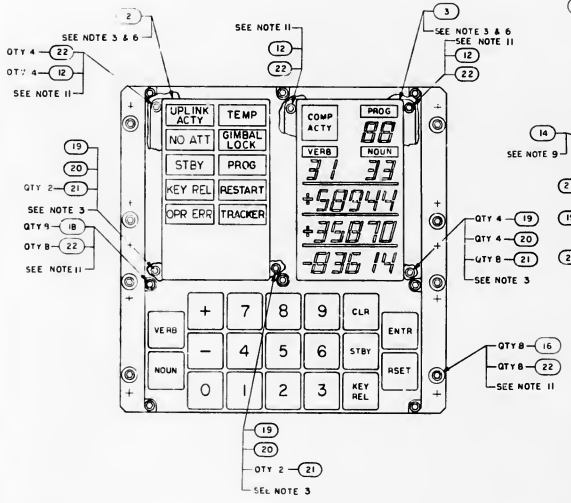

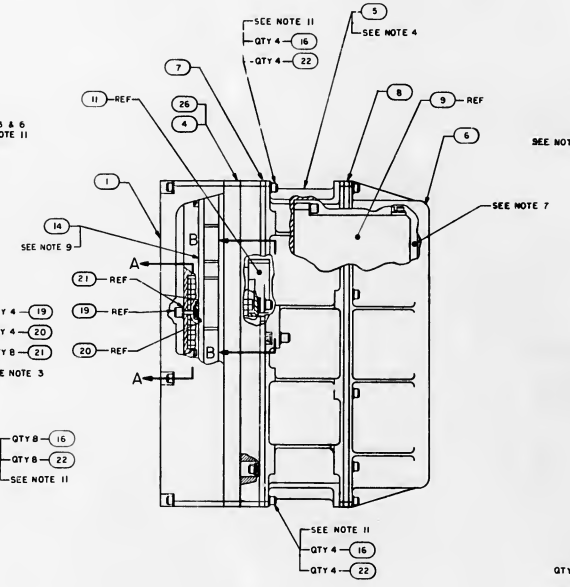

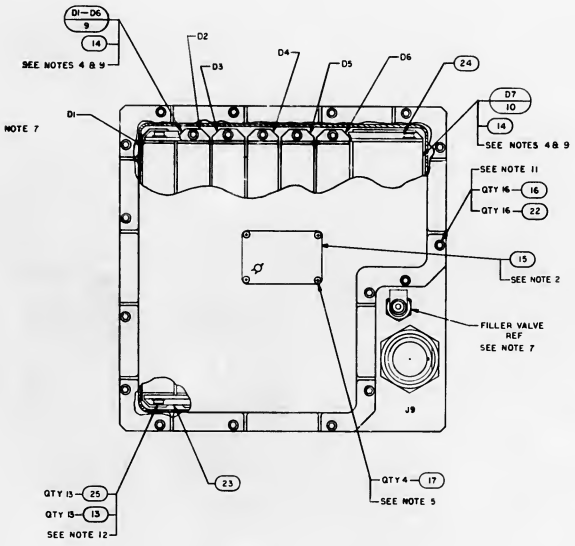

		2003956	OUTLINE DRAWING	REF
		2005957	SIGNAL PIN ASSIGNMENT	REF
		2005953	INTERCONNECTING DIAGRAM	REF
		2005918	SIGNAL FLOW DIAGRAM	REF
1	—	2003949-031	FRONT HOUSING ASSY	26
13	13	NAS62024	WASHER, FLAT	25
1	1	2004958	BRACKET, MODULE	24
1	1	2004959	BRACKET, MODULE	23
46	46	NAS62006	WASHER, FLAT	22
12	12	1004546-4	WASHER, FLAT	21
6	6	MS16633-4014	RING, RETAINING	20
6	6	2004932-001	SCREW, JACKING	19
8	8	1001489-59	SCREW, HEX SOCKET HEAD	18
4	4	MS35216-1	SCREW, PAN HEAD, CROSS RECESSED	17
32	32	MS16995-18	SCREW, HEX SOCKET HEAD	16
1	1	1004260-20	NAMEPLATE	15
AR	AR	1006879	SILICONE COMPOUND	14
13	13	MS16997-10	SCREW, HEX SOCKET HEAD	13
6	6	MS16995-20	SCREW, HEX SOCKET HEAD	12
1	1	2003909-021	KEYBOARD MODULE ASSY D8	11
1	1	2003901-021	POWER SUPPLY ASSY MODULE D7	10
6	6	2003952-021	INDICATOR DRIVER MODULE D1-D6	9
1	1	1006349	GASKET, BONDED, RUBBER	8
1	1	1006350	GASKET, BONDED, RUBBER	7
1	1	2004900	COVER, REAR	6
1	1	2003955-011	MAIN HOUSING ASSY	5
—	1	2003949-011	FRONT HOUSING ASSY	4
1	1	1006315-001	INDICATOR, DIGITAL	3
1	1	1006387-001	INDICATOR, ALARM	2
1	1	2004923-021	COVER, FRONT	1
QTY REQD	QTY REQD	PART OR IDENTIFYING NO	NOMENCLATURE OF DESCRIPTION	FIND NO
021	011		LIST OF MATERIALS	

NOTES

1. INTERPRET DRAWING IN ACCORDANCE WITH STANDARDS PRESCRIBED BY MIL-D-70327
2. MARK "AGC DSKY ASSEMBLY" AND ITS RESPECTIVE PART NO., SERIAL NO., AND CONTRACT NO. MARKING TO BE PER ND1002019 AND SERIALIZE PER ND1002023
3. MOUNTING TORQUE FOR FIND NO. 19 AND JACK SCREWS OF FIND NO. 11 TO BE 8.5-9.5 INCH POUNDS
4. MOUNTING TORQUE FOR JACK SCREWS OF FIND NO. 5, 9 & 10 TO BE 15-19 INCH POUNDS
5. APPLY SEALING COMPOUND MIL-S-22473 GRADE HV TO FIND NO. 17
6. FIND NO. 2 AND 3 TO BE ASSEMBLED TO HEIGHT OF BONDED RUBBER OF FIND NO. 4 OR FIND NO. 26 USING FIND NO. 19. BEFORE INSTALLING FIND NO. 12, ASSEMBLE IN AN ENVIRONMENT HAVING A TEMPERATURE OF 72° ±5° AND A RELATIVE HUMIDITY OF 50% OR LESS
7. FILL WITH A MINIMUM OF 87% NITROGEN AND 8.7% HELIUM AND A MAXIMUM OF 4.3% AIR TO 1.25-1.10 ATMOSPHERES. DO NOT EXCEED 2 ATMOSPHERES DURING PRESSURIZATION
8. COMPLETED ASSEMBLY SHALL BE TESTED IN ACCORDANCE WITH AND SHALL MEET ALL THE REQUIREMENTS OF PS2003950
9. APPLY FIND NO. 14 TO MATING SURFACES OF FIND NO. 4, 9 AND 10 DO NOT APPLY TO BONDED RUBBER OF FIND NO. 4, OR FIND NO. 26,
10. AR DENOTES AS REQUIRED
11. MOUNTING TORQUE FOR FIND NO. 16, 18 AND 12 TO BE 8-9 INCH POUNDS
12. MOUNTING TORQUE FOR FIND NO. 13 TO BE 3.5-4.5 INCH POUNDS

		UNLESS OTHERWISE SPECIFIED DIMENSIONS ARE IN INCHES TOLERANCES ON FRACTIONS DECIMALS ANGLES	MIT INSTRUMENTATION LAB CAMBRIDGE MASS. CONTRACT
		DO NOT SCALE THIS DRAWING	DRAWN [illegible] DATE [illegible]
		MATERIAL	CHECKED [illegible]
			APPROVAL [illegible]
		HEAT TREATMENT	APPROVAL [illegible]
HEAT ASSY	USED ON	Final Finish	NASA APPROVAL A.C. MILTON
APPLICATION			MIT APPROVAL [illegible]

MANNED SPACECRAFT CENTER
HOUSTON TEXAS

AGC DSKY ASSEMBLY

CODE IDENT NO	SIZE	NASA DRAWING NO
80230	J	2003950
SCALE 1/1	WT	SHEET 1 OF 1

2003950 C

2003950 D

SYM	DESCRIPTION	DATE	APPROVAL
A	REVISED PER TDRR 27541 OR CHK APPD		
B	REVISED PER TDRR 28178 OR CHK APPD		
C	REVISED PER TDRR 34492 OR CHK APPD		
D	REVISED PER TDRR [illegible] OR CHK APPD		

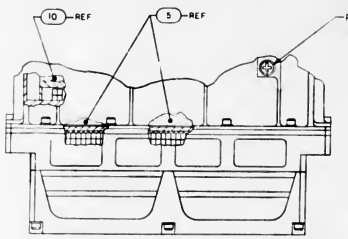

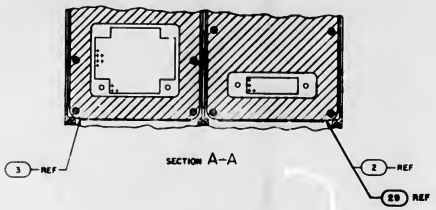

SECTION A-A

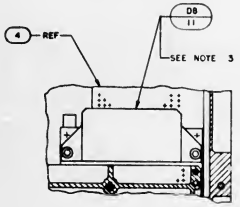

PARTIAL SECTION B-B

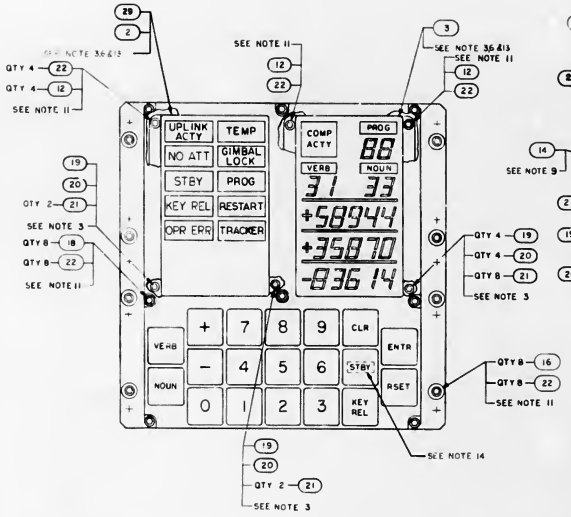

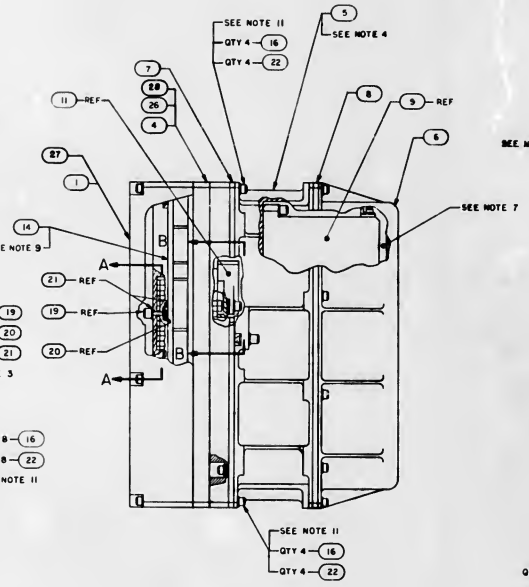

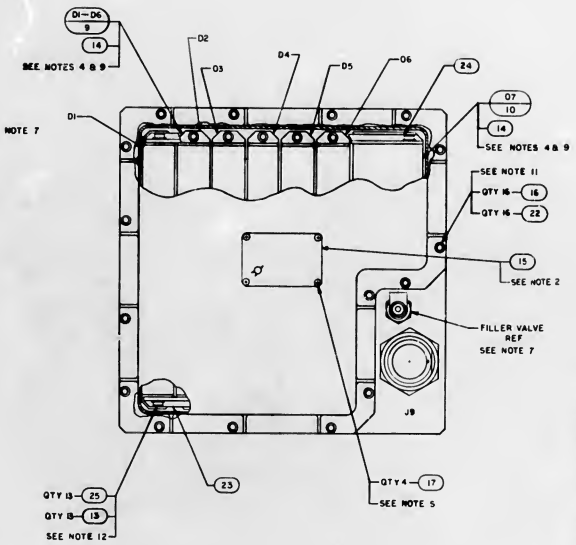

NOTES

1. INTERPRET DRAWING IN ACCORDANCE WITH STANDARDS PRESCRIBED BY MIL-D-70327
2. MARK AGC DSKY ASSEMBLY AND ITS RESPECTIVE PART NO., SERIAL NO., AND CONTRACT NO. MARKING TO BE PER NDI002319 AND SERIALIZE PER NDI002023
3. MOUNTING TORQUE FOR FIND NO. 19 AND JACK SCREWS OF FIND NO. 11&29 TO BE 6.5-9.5 INCH POUNDS
4. MOUNTING TORQUE FOR JACK SCREWS OF FIND NO. 5, 9 & 10 TO BE 15-19 INCH POUNDS
5. APPLY SEALING COMPOUND MIL-S-22473 GRADE HV TO FIND NO. 17
6. FIND NO. 2 AND 3 TO BE ASSEMBLED TO HEIGHT OF BONDED RUBBER OF FIND NO. 4 OR FIND NO 26 USING FIND NO. 19, BEFORE INSTALLING FIND NO. 12, ASSEMBLE IN AN ENVIRONMENT HAVING A TEMPERATURE OF 72° ±5° AND A RELATIVE HUMIDITY OF 50% OR LESS
7. FILL WITH A MINIMUM OF 87% NITROGEN AND 8.7% HELIUM AND A MAXIMUM OF 4.3% AIR TO 105-110 ATMOSPHERES. DO NOT EXCEED 2 ATMOSPHERES DURING PRESSURIZATION
8. COMPLETED ASSEMBLY SHALL BE TESTED IN ACCORDANCE WITH AND SHALL MEET ALL THE REQUIREMENTS OF PS2003950
9. APPLY FIND NO. 14 TO MATING SURFACES OF FIND NO. 4, 9, 10, 26 & 28. DO NOT APPLY TO BONDED RUBBER OF FIND NO. 4, 26 OR 28
10. AR DENOTES AS REQUIRED
11. MOUNTING TORQUE FOR FIND NO. 16 (8 AN) 12 TO BE 8-9 INCH POUNDS
12. MOUNTING TORQUE FOR FIND NO. 13 TO BE 3.5-4.5 INCH POUNDS
13. FIND NO. 3 TO BE ASSEMBLED TO HEIGHT OF BONDED RUBBER OF FIND NO. 28 USING FIND NO. 19 BEFORE INSTALLING FIND NO. 12. FIND NO. 29 TO BE ASSEMBLED USING EXISTING JACKING SCREWS. ASSEMBLE IN AN ENVIRONMENT HAVING A TEMPERATURE OF 72° ±5° AND A RELATIVE HUMIDITY OF 50% OR LESS
14. THE NUMBER OF CONFIGURATIONS SHALL REFLECT A NOMENCLATURE AS SHOWN, THE -031 CONFIGURATION SHALL [illegible] KEY POSITION INDICATE.

-031	1 THRU 5, 7 THRU 14
-021	1 THRU 12 & 14
-011	1 THRU 12 & 14

DASH NO	APPLICABLE NOTES
NOTE	APPLICATION

			2003956	OUTLINE DRAWING	REF
			2005957	SIGNAL PIN ASSIGNMENT	REF
			2005953	INTERCONNECTING DIAGRAM	REF
			2005918	SIGNAL FLOW DIAGRAM	REF
1	—	—	2003899-001	INDICATOR, ALARM & COVER ASSY	30
1	—	—	2003949-031	FRONT HOUSING ASSY	28
1	—	—	2004739	COVER, FRONT	27
—	1	—	2003949-031	FRONT HOUSING ASSY	26
13	13	13	NAS620C4	WASHER, FLAT	25
1	1	1	2004958	BRACKET, MODULE	24
1	1	1	2004959	BRACKET, MODULE	23
42	46	46	NAS620C6	WASHER, FLAT	22
8	12	12	1004946-4	WASHER FLAT	21
4	6	6	MS16633-4014	RING, RETAINING	20
4	6	6	2004932-001	SCREW, JACKING	19
8	8	8	1004489-99	SCREW-HEX SOCKET HEAD	18
4	4	4	MS35215-1	SCREW, PAN HEAD, CROSS RECESSED	17
32	32	32	MS16995-18	SCREW, HEX SOCKET HEAD	16
1	1	1	1004260-20	NAMEPLATE	15
AR	AR	AR	1006879	SILICONE COMPOUND	14
13	13	13	MS16995-10	SCREW, HEX SOCKET HEAD	13
6	6	6	MS16995-20	SCREW, HEX SOCKET HEAD	12
1	1	1	2003909-021	KEYBOARD MODULE ASSY D6	11
1	1	1	2003901-021	POWER SUPPLY ASSY MODULE D7	10
2	6	6	2003952-021	INDICATOR DRIVER MODULE D1-D6	9
1	1	1	1006349	GASKET, BONDED, RUBBER	8
1	1	1	1006350	GASKET, BONDED, RUBBER	7
1	1	1	2004900	COVER, REAR	6
—	1	1	2003955-011	MAIN HOUSING ASSY	5
—	—	1	2003949-011	FRONT HOUSING ASSY	4
1	—	1	1006315-001	INDICATOR, DIGITAL	3
—	1	1	1006387-001	INDICATOR, ALARM	2
—	1	1	2004929-021	COVER, FRONT	1
QTY REQD	QTY REQD	QTY REQD	PART OR IDENTIFYING NO	NOMENCLATURE OR DESCRIPTION	FIND NO
-031	-021	-011		LIST OF MATERIALS	

UNLESS OTHERWISE SPECIFIED DIMENSIONS ARE IN INCHES TOLERANCES ON FRACTIONS DECIMALS ANGLES		MIT INSTRUMENTATION LAB CAMBRIDGE MASS.	MANNED SPACECRAFT CENTER HOUSTON TEXAS
DO NOT SCALE THIS DRAWING		DRAWN DATE	AGC DSKY ASSEMBLY
MATERIAL		CHECKED	
HEAT TREATMENT		APPROVED	
FINAL FINISH		APPROVED	
NEXT ASSY	USED ON	NASA APPROVAL	CODE IDENT NO 80230 / SIZE J / NASA DRAWING NO 2003950
APPLICATION		MIT APPROVAL	SCALE 1/1 / WT / SHEET 1 OF 1

2003950 D

2003950 E

REVISIONS			
SYM	DESCRIPTION	DATE	APPROVED
A	REVISED PER TDRR 27551 OR CHK APPD		
B	REVISED PER TDRR 28178 OR CHK APPD		
C	REVISED PER TDRR 34492 OR CHK APPD		
D	REVISED PER TDRR 36035 OR CHK		
E	REVISED PER TDRR 36035 OR CHK		

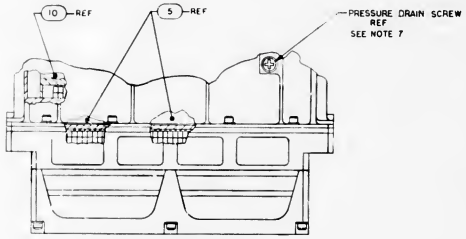

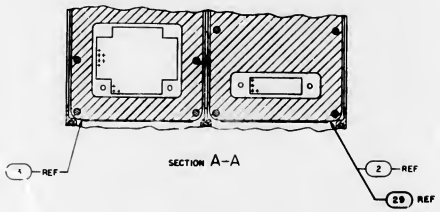

SECTION A-A

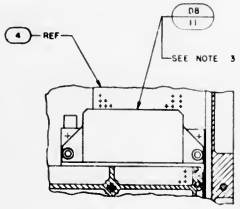

PARTIAL SECTION B-B

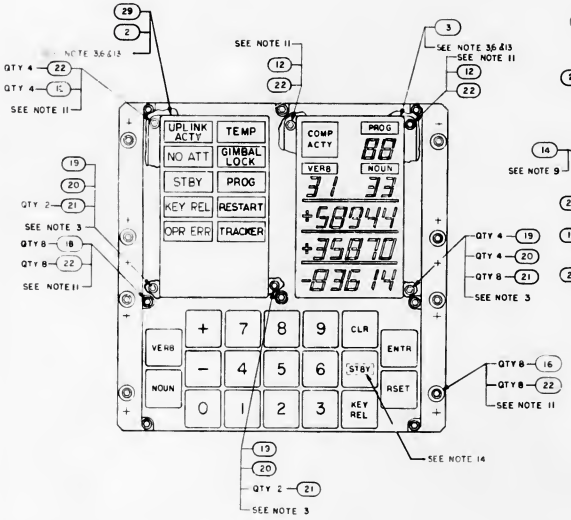

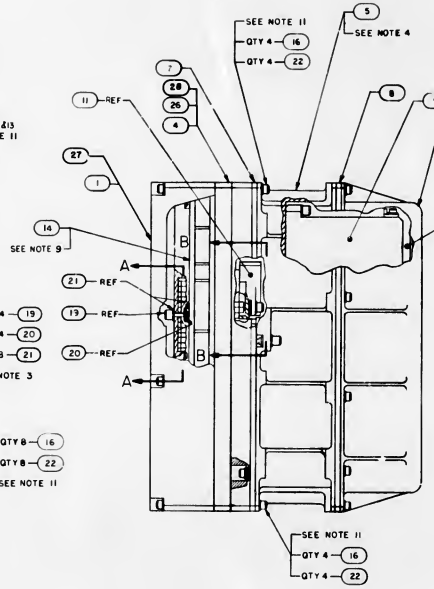

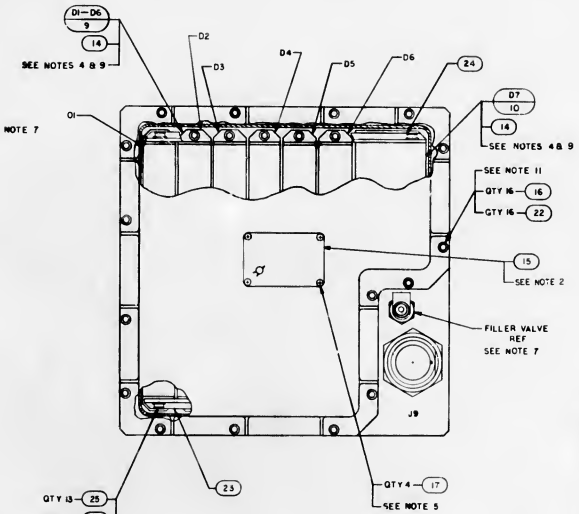

NOTES:

1. INTERPRET DRAWING IN ACCORDANCE WITH STANDARDS PRESCRIBED BY MIL-D-70327
2. MARK AGC DSKY ASSEMBLY AND ITS RESPECTIVE PART NO., SERIAL NO., AND CONTRACT NO. MARKING TO BE PER NDI002019 AND SERIALIZE PER NDI002023
3. MOUNTING TORQUE FOR FIND NO. 19 AND JACK SCREWS OF FIND NO. 11 & 29 TO BE 8.5-9.5 INCH POUNDS
4. MOUNTING TORQUE FOR JACK SCREWS OF FIND NO. 5, 9 & 10 TO BE 15-19 INCH POUNDS
5. APPLY SEALING COMPOUND PER 1008953-003 TO FIND NO. 17
6. FILL FEMALE INSULATOR OF FIND NO. 2 & FIND NO. 26 USING SILICONE COMPOUND PER 1008954 PRIOR TO ASSEMBLY OF FIND NO. 2 AND FIND NO. 3. FIND NO. 2 AND 3 TO BE ASSEMBLED TO HEIGHT OF BONDED RUBBER OF FIND NO. 4 OR FIND NO. 26 USING FIND NO. 19 BEFORE INSTALLING FIND NO. 12.
7. FILL WITH A MINIMUM OF 87% NITROGEN AND 8.7% HELIUM AND A MAXIMUM OF 4.3% AIR TO 105-110 ATMOSPHERES. DO NOT EXCEED 2 ATMOSPHERES DURING PRESSURIZATION
8. COMPLETED ASSEMBLY SHALL BE TESTED IN ACCORDANCE WITH AND SHALL MEET ALL THE REQUIREMENTS OF PS2003950
9. APPLY FIND NO. 14 TO MATING SURFACES OF FIND NO. 4, 9, 10, 26 & 28 DO NOT APPLY TO BONDED RUBBER OF FIND NO. 4, 26 OR 28
10. AR DENOTES AS REQUIRED
11. MOUNTING TORQUE FOR FIND NO. 16, 18 AND 12 TO BE 8-9 INCH POUNDS
12. MOUNTING TORQUE FOR FIND NO. 18 TO BE 3.5-4.5 INCH POUNDS
13. FILL FEMALE INSULATOR OF FIND NO. 28 USING SILICONE COMPOUND PER 1008954 PRIOR TO ASSEMBLY OF FIND NO. 3. FIND NO. 3 TO BE ASSEMBLED TO HEIGHT OF BONDED RUBBER OF FIND NO. 28 USING FIND NO. 19 BEFORE INSTALLING FIND NO. 12. FIND NO. 29 TO BE ASSEMBLED USING EXISTING JACKING SCREWS
14. THE -011 CONFIGURATION SHALL REFLECT A NOMENCLATURE AS SHOWN, THE -031 CONFIGURATION SHALL [illegible] KEY POSITION INDICATE.

-031	1 THRU 5, 7 THRU 14
-021	1 THRU 12 & 14
-011	1 THRU 12 & 14
DASH NO.	APPLICABLE NOTES
NOTE	APPLICATION

QTY REQD	QTY REQD	QTY REQD	PART OR IDENTIFYING NO.	NOMENCLATURE OR DESCRIPTION	FIND NO.
			2003956	OUTLINE DRAWING	REF
			2005957	SIGNAL PIN ASSIGNMENT	REF
			2005953	INTERCONNECTING DIAGRAM	REF
			2005918	SIGNAL FLOW DIAGRAM	REF
1	—	—	2003899-031	INDICATOR, ALARM & COVER ASSY	1
1	—	—	2003949-031	FRONT HOUSING ASSY	4
1	—	—	2004739	COVER, FRONT	20
—	1	—	2003949-031	FRONT HOUSING ASSY	20
13	13	13	NAS620C4	WASHER, FLAT	24
1	1	1	2004958	BRACKET, MODULE	24
1	1	1	2004959	BRACKET, MODULE	23
42	46	46	NAS620C6	WASHER, FLAT	22
8	12	12	1004946-4	WASHER, FLAT	21
4	6	6	MS16633-4014	RING, RETAINING	20
4	6	6	2004932-001	SCREW, JACKING	19
6	8	8	1001489-59	SCREW, HEX SOCKET HEAD	18
4	4	4	MS35216-1	SCREW, PAN HEAD, CROSS RECESSED	17
32	32	32	MS16995-18	SCREW, HEX SOCKET HEAD	16
1	1	1	1004260-20	NAMEPLATE	15
AR	AR	AR	1006879	SILICONE COMPOUND	14
13	13	13	MS16995-10	SCREW, HEX SOCKET HEAD	13
6	6	6	MS13995-20	SCREW, HEX SOCKET HEAD	12
1	1	1	2003909-021	KEYBOARD MODULE ASSY DS	11
1	1	1	2003971-021	POWER SUPPLY ASSY MODULE D7	10
2	6	6	2005912-021	INDICATOR DRIVER MODULE D1-D6	9
1	1	1	1006349	GASKET, BONDED, RUBBER	8
1	1	1	1006350	GASKET, BONDED, RUBBER	7
1	1	1	2004900	COVER, REAR	6
1	1	1	2003955-011	MAIN HOUSING ASSY	5
—	—	1	2003949-011	FRONT HOUSING ASSY	4
1	1	1	1006315-001	INDICATOR, DIGITAL	3
—	1	1	1006387-001	INDICATOR, ALARM	2
—	1	1	2004929-021	COVER, FRONT	1

LIST OF MATERIALS

UNLESS OTHERWISE SPECIFIED DIMENSIONS ARE IN INCHES TOLERANCES ON FRACTIONS ± DECIMALS ± ANGLES ±		MANNED SPACECRAFT CENTER HOUSTON, TEXAS	
DO NOT SCALE THIS DRAWING		AGC DSKY ASSEMBLY	
MATERIAL			
HEAT TREATMENT			
Final Finish		CODE IDENT NO. 80230	SIZE J
NEXT ASSY / USED ON		NASA DRAWING NO. 2003950	
APPLICATION		SCALE 1/1	SHEET 1 OF 1

2003950 E

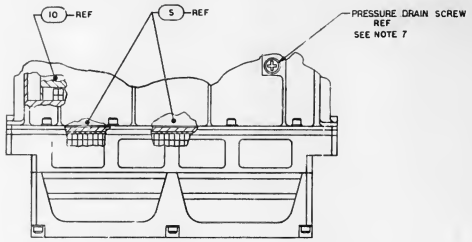

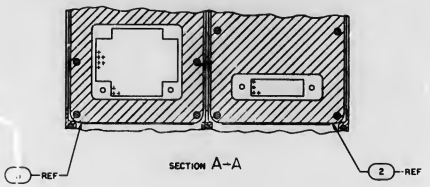

SECTION A-A

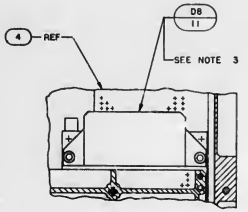

PARTIAL SECTION B-B

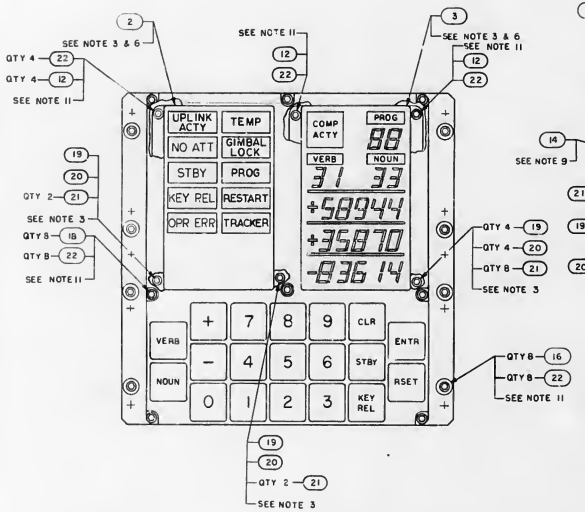

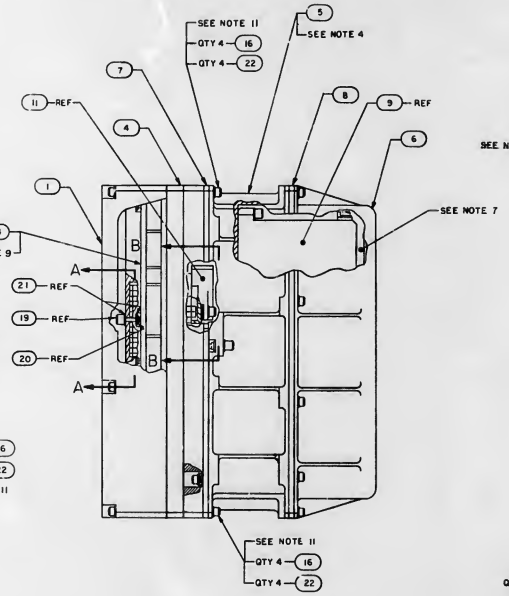

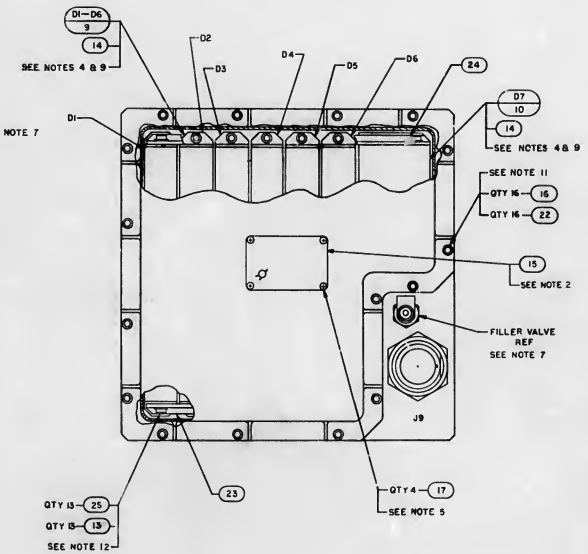

NOTES

1. INTERPRET DRAWING IN ACCORDANCE WITH STANDARDS PRESCRIBED BY MIL-D-70327
2. MARK "AGC DSKY ASSEMBLY" AND ITS RESPECTIVE PART NO., SERIAL NO., AND CONTRACT NO. MARKING TO BE PER ND1002019 AND SERIALIZE PER ND1002023
3. MOUNTING TORQUE FOR FIND NO. 19 AND JACK SCREWS OF FIND NO. 11 TO BE 8.5-9.5 INCH POUNDS
4. MOUNTING TORQUE FOR JACK SCREWS OF FIND NO. 5, 9 & 10 TO BE 15-19 INCH POUNDS
5. APPLY SEALING COMPOUND MIL-S-22473 GRADE HV TO FIND NO. 17
6. FIND NO. 2 AND 3 TO BE ASSEMBLED TO HEIGHT OF BONDED RUBBER OF FIND NO. 4 USING FIND NO. 19. BEFORE INSTALLING FIND NO. 12, ASSEMBLE IN AN ENVIRONMENT HAVING A TEMPERATURE OF 72° ± 5° AND A RELATIVE HUMIDITY OF 50% OR LESS
7. FILL WITH A MINIMUM OF 87% NITROGEN AND 6.7% HELIUM AND A MAXIMUM OF 4.3% AIR TO 1.05/1.10 ATMOSPHERES. DO NOT EXCEED 2 ATMOSPHERES DURING PRESSURIZATION
8. COMPLETED ASSEMBLY SHALL BE TESTED IN ACCORDANCE WITH AND SHALL MEET ALL THE REQUIREMENTS OF PS2003950
9. APPLY FIND NO. 14 TO MATING SURFACES OF FIND NO. 4, 9 AND 10 DO NOT APPLY TO BONDED RUBBER OF FIND NO. 4.
10. AR DENOTES AS REQUIRED
11. MOUNTING TORQUE FOR FIND NO. 16, 18 AND 12 TO BE 8-9 INCH POUNDS
12. MOUNTING TORQUE FOR FIND NO. 13 TO BE 3.5-4.5 INCH POUNDS

QTY REQD	PART OR IDENTIFYING NO	NOMENCLATURE OF DESCRIPTION
	2003956	OUTLINE DRAWING
	2005957	SIGNAL PIN ASSIGNMENT
	2005953	INTERCONNECTING DIAGRAM
	2005918	SIGNAL FLOW DIAGRAM
13	NAS620C4	WASHER, FLAT
1	2004958	BRACKET, MODULE
1	2004959	BRACKET, MODULE
46	NAS620C6	WASHER, FLAT
12	1004546-4	WASHER, FLAT
6	MS16633-4014	RING, RETAINING
6	2004932-001	SCREW, JACKING
8	1001489-59	SCREW, HEX SOCKET HEAD
4	MS35216-1	SCREW, PAN HEAD, CROSS RECESSED
32	MS16995-16	SCREW, HEX SOCKET HEAD
1	1004260-20	NAMEPLATE
AR	1006879	SILICONE COMPOUND
13	MS16995-10	SCREW, HEX SOCKET HEAD
6	MS16995-20	SCREW, HEX, SOCKET HEAD
1	2003909-011	KEYBOARD MODULE ASSY D8
1	2003901-011	POWER SUPPLY ASSY MODULE D7
6	2003952-011	INDICATOR DRIVER MODULE D1-D6
1	1006349	GASKET, BONDED, RUBBER
1	1006350	GASKET, BONDED, RUBBER
1	2004900	COVER, REAR
1	2003955-011	MAIN HOUSING ASSY
1	2003949-011	FRONT HOUSING ASSY
1	1006315	INDICATOR, DIGITAL
1	1006387	INDICATOR, ALARM
1	2004929-011	COVER, FRONT

011 LIST OF MATERIALS

BTY INSTRUMENTATION LAB Cambridge, Mass.

MANNED SPACECRAFT CENTER HOUSTON TEXAS

DR. D. DRAWN DATE 5-5-66
CHECKED
APPROVAL
APPROVAL

UNLESS OTHERWISE SPECIFIED DIMENSIONS ARE IN INCHES TOLERANCES ON FRACTIONS ± DECIMALS ± ANGLES ±
DO NOT SCALE THIS DRAWING
MATERIAL
HEAT TREATMENT
FINAL FINISH
NEXT ASSY USED ON
APPLICATION

NASA APPROVAL A. C. McVATTAN
MIT APPROVAL

AGC DSKY ASSEMBLY

CODE IDENT NO 80230 SIZE J NASA DRAWING NO 2003950
SCALE 1/1 WT SHEET 1

REVISIONS			
SYM	DESCRIPTION	DATE	APPROVAL

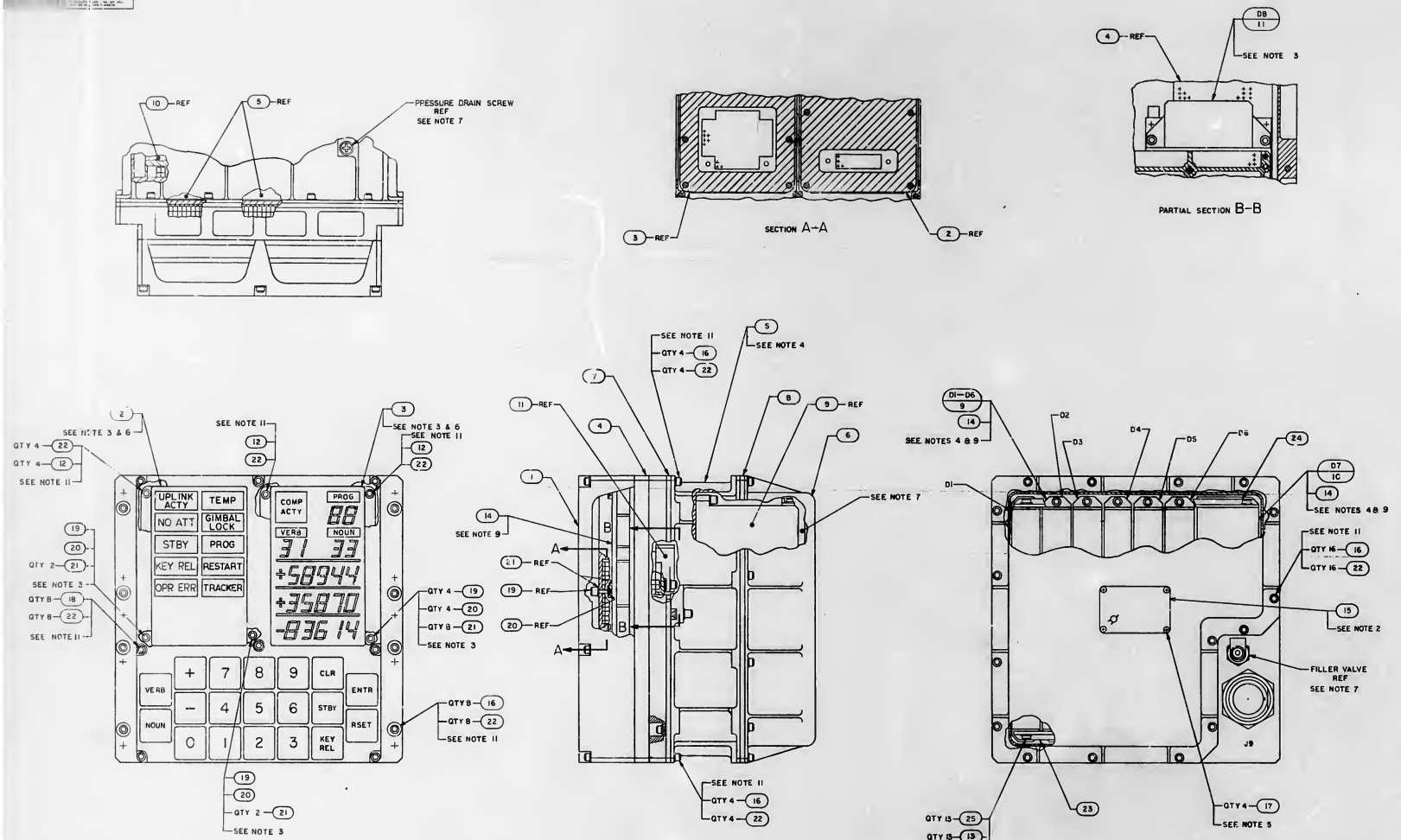

NOTES

1. INTERPRET DRAWING IN ACCORDANCE WITH STANDARDS PRESCRIBED BY MIL-D-70327
2. MARK "MC DSKY ASSEMBLY" AND ITS RESPECTIVE PART NO., SERIAL NO. AND CONTRACT NO. MARKING TO BE PER ND1002019 AND SERIALIZE PER ND1002023
3. MOUNTING TORQUE FOR FIND NO. 19 AND JACK SCREWS OF FIND NO. 11 TO BE 8.5-9.5 INCH POUNDS
4. MOUNTING TORQUE FOR JACK SCREWS OF FIND NO. 5, 9 & 10 TO BE 15-19 INCH POUNDS
5. APPLY SEALING COMPOUND MIL-S-22473 GRADE HV TO FIND NO. 17
6. FIND NO. 2 AND 3 TO BE ASSEMBLED TO HEIGHT OF BONDED RUBBER OF FIND NO. 4 USING FIND NO. 19, BEFORE INSTALLING FIND NO. 12. ASSEMBLE IN AN ENVIRONMENT HAVING A TEMPERATURE OF 72° ±5° AND A RELATIVE HUMIDITY OF 50% OR LESS
7. FILL WITH A MINIMUM OF 87% NITROGEN AND 8.7% HELIUM AND A MAXIMUM OF 4.3% AIR TO 1.05/1.10 ATMOSPHERES. DO NOT EXCEED 2 ATMOSPHERES DURING PRESSURIZATION
8. COMPLETED ASSEMBLY SHALL BE TESTED IN ACCORDANCE WITH AND SHALL MEET ALL THE REQUIREMENTS OF PS10035.20
9. APPLY FIND NO. 14 TO MATING SURFACES OF FIND NO. 4, 9 AND 10 DO NOT APPLY TO BONDED RUBBER OF FIND NO. 4.
10. AR DENOTES AS REQUIRED
11. MOUNTING TORQUE FOR FIND NO. 16, 18 AND 12 TO BE 8-9 INCH POUNDS
12. MOUNTING TORQUE FOR FIND NO. 13 TO BE 3.5-4.5 INCH POUNDS

QTY REQD	PART OR IDENTIFYING NO	NOMENCLATURE OF DESCRIPTION	FIND NO
	2003956	OUTLINE DRAWING	REF
	2005957	SIGNAL PIN ASSIGNMENT	REF
	2005953	INTERCONNECTING DIAGRAM	REF
	2005918	SIGNAL FLOW DIAGRAM	REF
13	NAS620C4	WASHER, FLAT	25
1	2004958	BRACKET, MODULE	24
1	2004959	BRACKET, MODULE	23
46	NAS620C6	WASHER, FLAT	22
12	1004546-4	WASHER, FLAT	21
6	MS16633-4014	RING, RETAINING	20
6	2004932-001	SCREW, JACKING	19
8	1001489-59	SCREW, HEX SOCKET HEAD	18
4	MS35216-1	SCREW, PAN HEAD, CROSS RECESSED	17
32	MS16995-16	SCREW, HEX SOCKET HEAD	16
1	1004260-20	NAMEPLATE	15
AR	1006875	SILICONE COMPOUND	14
13	MS16995-10	SCREW, HEX SOCKET HEAD	13
6	MS16995-20	SCREW, HEX SOCKET HEAD	12
1	2003909-011	KEYBOARD MODULE ASSY D8	11
1	2003901-011	POWER SUPPLY ASSY MODULE D7	10
6	2003912-011	INDICATOR DRIVER MODULE D1-D6	9
1	1006349	GASKET, BONDED, RUBBER	8
1	1006350	GASKET, BONDED, RUBBER	7
1	2004900	COVER, REAR	6
1	2003953-011	MAIN HOUSING ASSY	5
1	2003949-011	FRONT HOUSING ASSY	4
1	1006315	INDICATOR, DIGITAL	3
1	1006387	INDICATOR, ALARM	2
1	2004929-011	COVER, FRONT	1

011 LIST OF MATERIALS

NEXT ASSY	USED ON	APPLICATION	

UNLESS OTHERWISE SPECIFIED DIMENSIONS ARE IN INCHES
TOLERANCES ON
FRACTIONS ± DECIMALS ± ANGLES ±
DO NOT SCALE THIS DRAWING
MATERIAL
HEAT TREATMENT
FINISH

BIT INSTRUMENTATION LAB CAMBRIDGE MASS. DIVISION OF CONTRACT

DRAWN DATE
CHECKED
APPROVED
APPROVED

NASA APPROVAL A. C. McCORDER
INT APPROVAL

MANNED SPACECRAFT CENTER HOUSTON TEXAS

AGC DSKY ASSEMBLY

CODE IDENT NO	SIZE	NASA DRAWING NO
80230	J	2003950

SCALE 1/1 WT SHEET 1 OF 1

2003950 G

SYM	DESCRIPTION	DATE	APPROVAL
A	REVISED PER TDRR 27551 DR CHK APPD		
B	REVISED PER TDRR 28178 DR CHK APPD		
C	REVISED PER TDRR 34492 DR CHK APPD		
D	REVISED PER TDRR 36015 DR CHK		
E	REVISED PER TDRR 36035 DR CHK		
F	REVISED PER TDRR 36655 DR CHK ENG		
G			

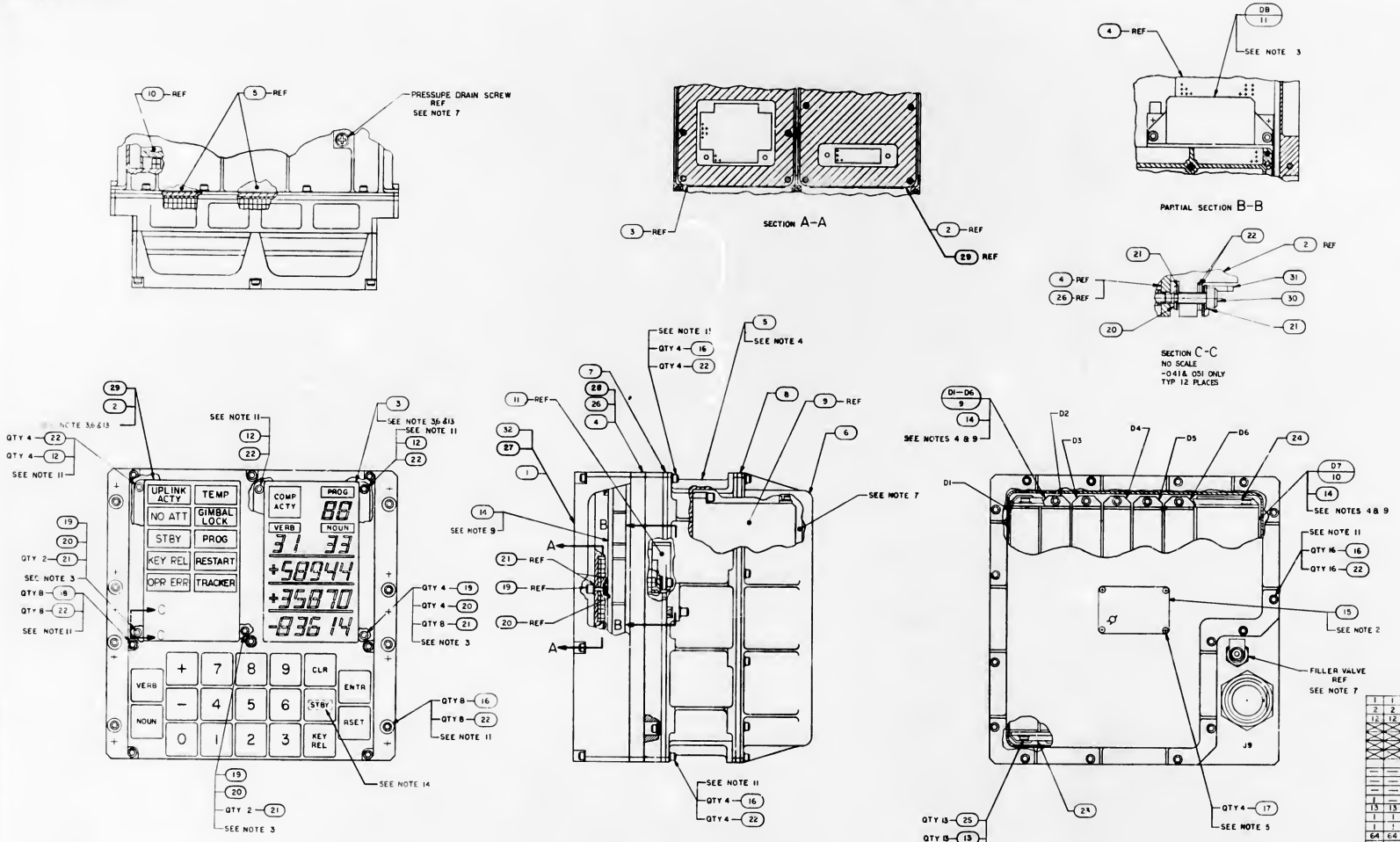

1	1	—	—	—	2004739-031	COVER, FRONT	32
2	2	—	—	—	2003897-041	COVER ASSY	31
12	12	—	—	—	2004932-004	SCREW, JACKING	30
					2003956	OUTLINE DRAWING	REF
					2005957	SIGNAL PIN ASSIGNMENT	REF
					2005953	INTERCONNECTING DIAGRAM	REF
					2005918	SIGNAL FLOW DIAGRAM	REF
—	—	1	—	—	2003839-011	INDICATOR, ALARM & COVER ASSY	29
—	—	1	—	—	2003949-051	FRONT HOUSING ASSY	28
—	—	1	—	—	2004739-000	COVER, FRONT	27
1	—	—	1	—	2003949-031	FRONT HOUSING ASSY	26
13	13	13	13	13	NAS620C4	WASHER, FLAT	25
1	1	1	1	1	2004958	BRACKET, MODULE	24
1	1	1	1	1	2004959	BRACKET, MODULE	23
64	64	42	46	46	NAS620C6	WASHER, FLAT	22
24	24	8	12	12	1004946-4	WASHER, FLAT	21
12	12	4	6	6	MS16633-4014	RING, RETAINING	20
—	—	4	6	6	2004932-001	SCREW, JACKING	19
8	8	8	8	8	1001489-59	SCREW, HEX SOCKET HEAD	18
4	4	4	4	4	MS35216-1	SCREW, PAN HEAD, CROSS RECESSED	17
32	32	32	32	32	MS16995-18	SCREW, HEX SOCKET HEAD	16
1	1	1	1	1	1004260-20	NAMEPLATE	15
AR	AR	AR	AR	AR	1006879	SILICONE COMPOUND	14
13	13	13	13	13	MS16995-10	SCREW, HEX SOCKET HEAD	13
—	—	2	6	6	MS16995-20	SCREW, HEX SOCKET HEAD	12
1	1	1	1	1	2003909-021	KEYBOARD MODULE ASSY DB	11
1	1	1	1	1	2003901-021	POWER SUPPLY ASSY MODULE D7	10
6	6	6	6	6	2003952-021	INDICATOR DRIVER MODULE DI-D6	9
1	1	1	1	1	1006349	GASKET, BONDED, RUBBER	8
1	1	1	1	1	1006350	GASKET, BONDED, RUBBER	7
1	1	1	1	1	2004900	COVER, REAR	6
1	1	1	1	1	2003955-011	MAIN HOUSING ASSY	5
—	1	—	—	1	2003949-011	FRONT HOUSING ASSY	4
1	1	1	1	1	1006315-001	INDICATOR, DIGITAL	3
1	1	—	1	1	1006387-001	INDICATOR, ALARM	2
—	—	—	1	1	2004929-021	COVER, FRONT	1
QTY REQD 051	QTY REQD 041	QTY REQD 031	QTY REQD 021	QTY REQD 011	PART OR IDENTIFYING NO	NOMENCLATURE OF DESCRIPTION	FIND NO

LIST OF MATERIALS

—051	1 THRU 5, 7 THRU 12, 14
—041	1 THRU 5, 7 THRU 12, 14
—031	1 THRU 5, 7 THRU 14
—021	1 THRU 12 & 14
—011	1 THRU 12 & 14
DASH NO	APPLICABLE NOTES
NOTE	APPLICATION

NOTES

1. INTERPRET DRAWING IN ACCORDANCE WITH STANDARDS PRESCRIBED BY MIL-D-70327
2. MARK 'AGC DSKY ASSEMBLY' AND ITS RESPECTIVE PART NO., SERIAL NO., AND CONTRACT NO. MARKING TO BE PER NDI002015 AND SERIALIZE PER NDI002023
3. MOUNTING TORQUE FOR FIND NO.19 & FIND NO.30 AND JACK SCREWS OF FIND NO. 11 & 29 TO BE 8.5-9.5 INCH POUNDS
4. MOUNTING TORQUE FOR JACK SCREWS OF FIND NO. 5, 9 & 10 TO BE 15-19 INCH POUNDS
5. APPLY SEALING COMPOUND PER 1008953-003 TO FIND NO.17
6. FILL REMAIN. INSULATOR OF FIND NO.4 ON FIND NO. 26 USING SILICONE COMPOUND PER 1008954 PRIOR TO ASSEMBLY OF FIND NO.2 AND FIND NO.3 FIND NO.2 AND 3 TO BE ASSEMBLED TO HEIGHT OF BONDED RUBBER OF FIND NO.4 OR FIND NO.26 USING FIND NO.19 BEFORE INSTALLING FIND NO.12
7. FILL WITH A MINIMUM OF 87% NITROGEN AND 8.7% HELIUM AND A MAXIMUM OF 4.3% AIR TO 105-110 ATMOSPHERES. DO NOT EXCEED 2 ATMOSPHERES DURING PRESSURIZATION
8. COMPLETED ASSEMBLY SHALL BE TESTED IN ACCORDANCE WITH AND SHALL MEET ALL THE REQUIREMENTS OF PS2003950
9. APPLY FIND NO. 14 TO MATING SURFACES OF FIND NO. 4, 9, 10, 26 & 28 DO NOT APPLY TO BONDED RUBBER OF FIND NO. 4, 26 OR 28
10. AR DENOTES AS REQUIRED
11. MOUNTING TORQUE FOR FIND NO. 16, 18 AND 12 TO BE 8-9 INCH POUNDS
12. MOUNTING TORQUE FOR FIND NO. 18 TO BE 3.5-4.5 INCH POUNDS
13. FILL FEMALE INSULATOR OF FIND NO 28 USING SILICONE COMPOUND PER 1008954 PRIOR TO ASSEMBLY OF FIND NO.3 FIND NO.3 TO BE ASSEMBLED TO HEIGHT OF BONDED RUBBER OF FIND NO.28 USING FIND NO.19 BEFORE INSTALLING FIND NO.12. FIND NO.29 TO BE ASSEMBLED USING EXISTING JACKING SCREWS
14. THE -011 [illegible] CONFIGURATION SHALL REFLECT A NOMENCLATURE AS SHOWN. THE -031 CONFIGURATION SHALL [illegible] KEY POSITION INDICATED.

UNLESS OTHERWISE SPECIFIED DIMENSIONS ARE IN INCHES
TOLERANCES ON FRACTIONS DECIMALS ANGLES
DO NOT SCALE THIS DRAWING
MATERIAL
HEAT TREATMENT
FINAL FINISH
NEXT ASSY USED ON
APPLICATION

MIT INSTRUMENTATION LAB CAMBRIDGE MASS.
DRAWN CHECKED APPROVED APPROVED
NASA APPROVAL
MIT APPROVAL

MANNED SPACECRAFT CENTER HOUSTON TEXAS

AGC DSKY ASSEMBLY

CODE IDENT NO 80230 | SIZE J | NASA DRAWING NO 2003950
SCALE 1/1 | WT | SHEET 1 OF 1

2003950 G

2003951 D

REVISIONS 26205					
SYM	ZONE	DESCRIPTION	BY	CHK	APP
A		REVISED PER TDRR 27086			
B		REVISED PER TDRR 27739			
C		REVISED PER TDRR 28252			
D		REVISED PER TDRR 32580			

JUMPER LIST

COND IDENT	REMARKS	FROM	FIND NO.	COLOR	SIZE AWG	LENGTH	TO	REMARKS
E1	*	J12-186	5	WHT	26	AR	J12-191	
E2		J12-191	6	—			J12-197	
E3		J12-197	6	—			J12-203	
E4		J12-203	6	—			J12-202	
E5		J12-202	6	—			J12-201	
E6	SEE	J12-201	6	—			J12-207	SEE
E7	NOTE 7	J12-207	6	—			J12-208	NOTE 7
E8		J12-208	6	—			J12-209	
E9	*	J12-181	5	WHT			J12-185	
E10		J12-185	5	WHT			J12-190	
E11		J12-190	6	—			J12-195	
E12		J12-195	6	—			J12-196	
E13	*	J12-180	5	WHT			J12-179	
E14	*	J12-166	6	—			J12-165	
E15	*	J12-183	6	—			J12-177	
E14	*	J12-166	6	—			J12-165	
E15	*	J12-183	6	WHT			J12-177	
E16		J12-177	5	WHT			J12-19	**
E17	*	J12-19	5	WHT	26	AR	J12-184	**

* DENOTES MUST BE FIRST LEVEL

** DENOTES JUMPERS NOT TO BE INCORPORATED ON -021 CONFIGURATION

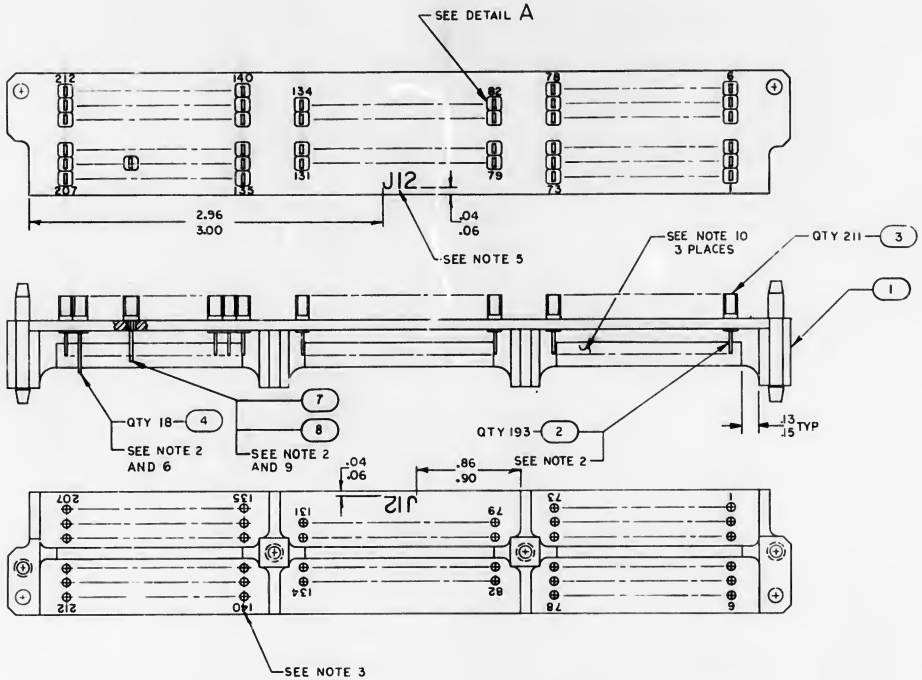

NOTES

1. INTERPRET DRAWING IN ACCORDANCE WITH STANDARDS PRESCRIBED BY MIL-D-70327
2. ASSEMBLE FIND NO. 2, 3, 4, 7 & 8 TO FIND NO. 1 PER ND1002136
3. MARK .05/.07 HIGH BLACK CHARACTERS LOCATE APPROX AS SHOWN PER ND1002019 AND ND1002122 TYPE II, CLASS 2 USING INK 1006271-11
4. IDENTIFY WITH PART NO. PER ND1002019
5. MARK .10/.14 HIGH BLACK CHARACTERS PER ND1002019 AND ND1002122, TYPE II, CLASS 2 USING INK 1006271-11
6. FIND NO. 4 TO BE INSTALLED AT PIN POSITIONS 207, 180, 190, 191, 181, 185, 195, 197, 201, 202, 203, 186, 208, 166, 171, 183, 177 & 19
7. WIRE WRAP USING JUMPER LIST PER ND1002031 EXCEPT FIND NO. 5 TO HAVE; 5 MIN TO 7 MAX TURNS OF UNINSULATED WIRE; 1/2 TO 1 1/2 TURNS OF INSULATED WIRE; STRIP LENGTH OF 1.18 TO 1.00; AND A STRIP FORCE OF 6 LB MIN, AND FIND NO. 6 TO HAVE 6 MIN TO 8 MAX TURNS OF BARE WIRE AND A STRIP FORCE OF 6 LB MIN
8. AR DENOTES AS REQUIRED
9. INSTALL FIND NO. 7 AND 8 IN PIN POSITION 184
10. APPLY TAPE PER MIL-T-23594, TYPE I, 1/2 INCH WIDE, TO INDICATED SURFACES. CENTRALIZE AS SHOWN

DETAIL A
SCALE 10/1
212 PLACES

QTY REQD	QTY NEEDED	PART OR IDENTIFYING NO	MATERIAL OR NOTES	NOMENCLATURE OR DESCRIPTION	FIND NO
AR	—	MIL-T-23594	SEE NOTE 10	TAPE, INSULATION	9
1	1	1008819-002		SLEEVE, GROUNDING	8
1	1	1008818-005		CONTACT, WRAPOST, FEMALE, GRD	7
AR	AR	QQ-W-343 TYPE S		WIRE, AWG 26, SOFT COATED (a)	6
AR	AR	1010807-22		WIRE, ELECTRICAL	5
18	18	1006781-2		CONTACT, WRAPOST, FEMALE	4
211	211	1006774		INSULATOR, WRAPOST, FEMALE	3
193	193	1006781-1		CONTACT, WRAPOST, FEMALE	2
1	1	2004923-011		PLATE, CONNECTOR	1
021	011				

LIST OF MATERIALS

2003882	
2003955	
NEXT ASSY	USED ON
APPLICATION	

UNLESS OTHERWISE SPECIFIED DIMENSIONS ARE IN INCHES. CAPACITOR VALUES ARE IN μf. RESISTOR VALUES ARE IN OHMS. TOLERANCES ON FRACTIONS ± DECIMALS ± ANGLES ± DO NOT SCALE THIS DRAWING.

MATERIAL

MIT INSTRUMENTATION LAB CAMBRIDGE MASS

DRAWN 3 DEC 65
CHECKED 3 FEB 66
APPROVED 3 FEB 66
APPROVED 11 FEB 66
APPROVED MIT
APPROVED MSC A. C. METZNER

MANNED SPACECRAFT CENTER HOUSTON TEXAS

CONNECTOR PLATE ASSY
MAIN HOUSING
AGC DSKY

CODE IDENT NO	SIZE	DRAWING NO
80230	D	2003951

SCALE 2/1 SHEET 1 1

2003951 D

REVISIONS				
	QTY	DESCRIPTION	DATE	APPROVAL
A		REVISED PER TDRR 27552 DR D. Magnus CHK R.E. SM	4/6/66	
B		REVISED PER TDRR 27913 DR [illegible] CHK [illegible]	5/11/66	
C		REVISED PER TDRR 28178 DR [illegible] CHK [illegible]	5/26/66	

2003959 C

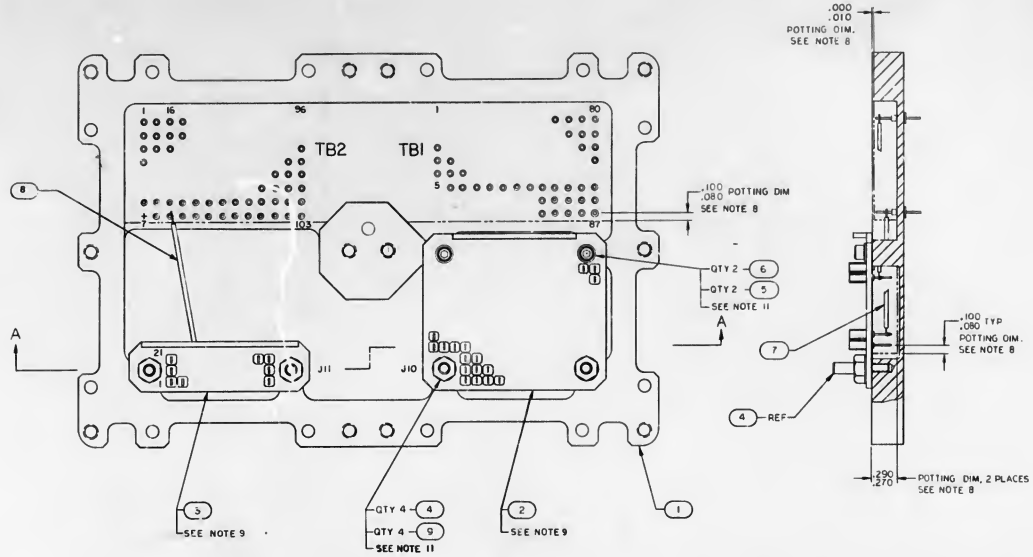

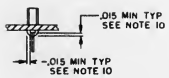

DETAIL A

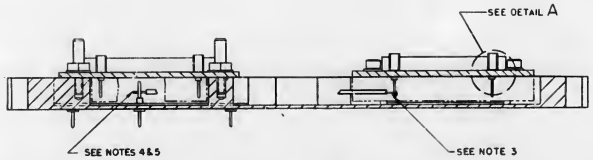

SECTION A-A

NOTES:

1. INTERPRET DRAWING IN ACCORDANCE WITH STANDARDS PRESCRIBED BY MIL-D-70327
2. AR DENOTES AS REQUIRED
3. WIRE WRAP PER WIRING LEGEND AND PER ND1002031 EXCEPT FIND 8 TO HAVE 5 MIN TO 7 MAX TURNS OF UNINSULATED WIRE, 1/2 TO 1 1/2 TURNS OF INSULATED WIRE, STRIP LENGTH OF 1.18 TO 1.00 AND A STRIP FORCE OF 5 LB MIN
4. UNLESS OTHERWISE SPECIFIED ALL WIRING SHALL BE IN ACCORDANCE WITH ND1002069
5. WELD PER ND1002005
6. DRESS AND TRIM, AND BOND PER ND 1002009 METHOD C
7. IDENTIFY WITH PART NO. PER ND1002019
8. ENCAPSULATE PER ND1002236
9. DRESS WIRES WITHIN THE POTTING AREA UNDER FIND NO.2 AND FIND NO.3 USING FIND NO. 10
10. SEAL INSULATORS OF FIND NO.2 AND 3 PER ND1002004 TYPE VI
11. MOUNTING TORQUE OF FIND NO.4 AND FIND NO.6 TO BE 3.5-4.5 INCH POUNDS

QTY REQD	PART OR IDENTIFYING NO	NOMENCLATURE OR DESCRIPTION	FIND NO
A R	1012507-001	TAPE, LACING AND TYPING	10
4	NAS620C-6L	WASHER, FLAT	9
A R	1010907-22	WIRE, ELECTRICAL INSULATED	8
A R	1006376-003	WIRE, ELECTRICAL INSULATED	7
2	MS16995-10	SCREW, SOCKET HEAD	6
2	NAS620C-4L	WASHER, FLAT	5
4	2004938	PIN, ALIGNMENT	4
1	2003958-011	CONNECTOR, PLATE ASSEMBLY	3
1	2003957-011	CONNECTOR, PLATE ASSEMBLY	2
1	2004919-021	PLATE, ADAPTER	1
011		LIST OF MATERIALS	

UNLESS OTHERWISE SPECIFIED DIMENSIONS ARE IN INCHES
TOLERANCES ON
FRACTIONS ± DECIMALS ± ANGLES ±
DO NOT SCALE THIS DRAWING
MATERIAL
HEAT TREATMENT
FINAL FINISH

2003949
NEXT ASSY USED ON
APPLICATION

M.I.T. INSTRUMENTATION LAB
Cambridge Mass
DRAWN
CHECKED
APPROVAL
APPROVAL
NASA APPROVAL
MIT APPROVAL

MANNED SPACECRAFT CENTER
HOUSTON TEXAS

ADAPTER PLATE ASSY
AGC DSKY

CODE IDENT NO. 80230 SIZE E NASA DRAWING NO. 2003959
SCALE 2/1 WT SHEET 1 OF 3

2003959 C

2003959 C

REVISIONS					
SYM	ZONE	DESCRIPTION	BY	CHK	DATE
A		REVISED PER TDRR 27552			
B		REVISED PER TDRR 27913			
C		REVISED PER TDRR 28178			

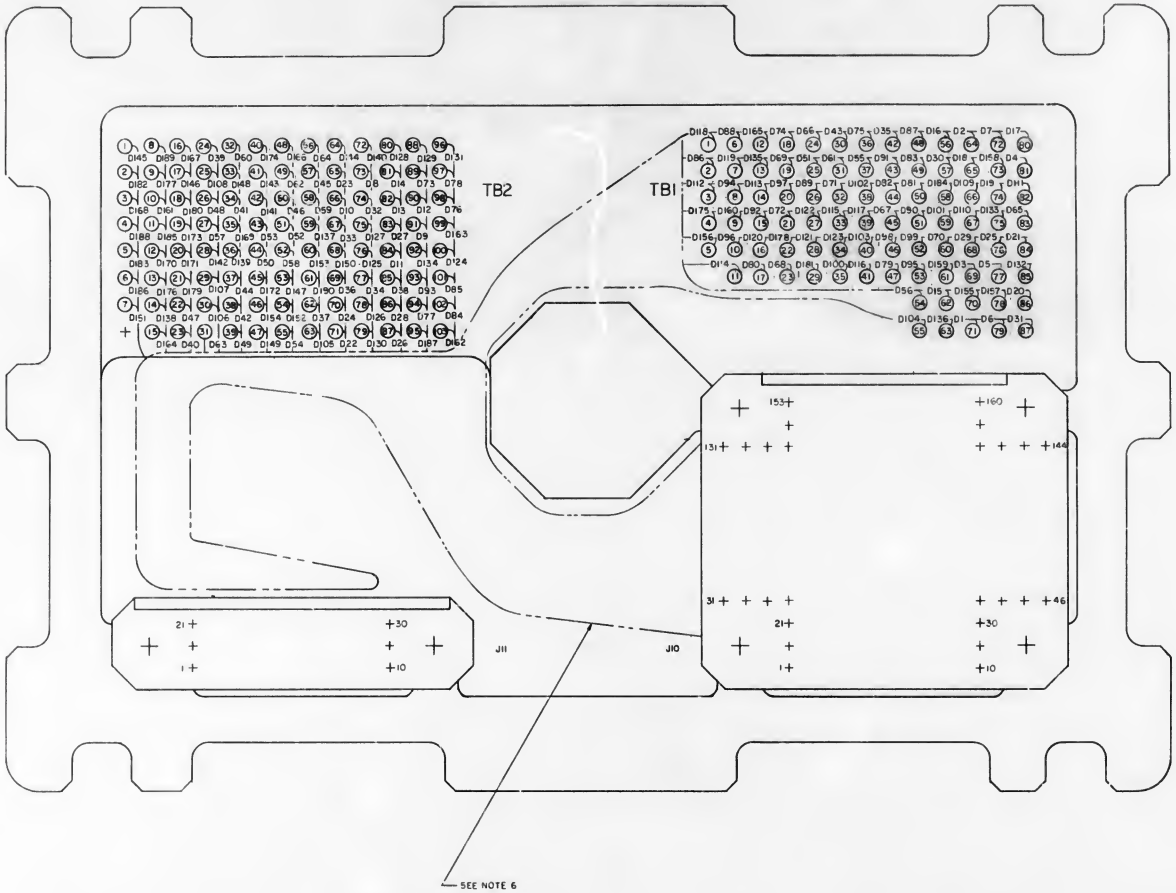

QTY REQD	PART OR IDENTIFYING NO	MATERIAL OR NOTES	NOMENCLATURE OR DESCRIPTION	FIND NO.

LIST OF MATERIALS

UNLESS OTHERWISE SPECIFIED DIMENSIONS ARE IN INCHES
CAPACITOR VALUES ARE IN μf
RESISTOR VALUES ARE IN OHMS
TOLERANCES ON
FRACTIONS DECIMALS ANGLES
± ± ±
DO NOT SCALE THIS DRAWING
MATERIAL

NEXT ASSY | USED ON
APPLICATION

MIT INSTRUMENTATION LAB
CAMBRIDGE MASS

MANNED SPACECRAFT CENTER
HOUSTON TEXAS

DRAWN
CHECKED
APPROVED
APPROVED

ADAPTER PLATE ASSY
AGC DSKY

APPROVED MIT
APPROVED NASC

CODE IDENT NO. 80230 | SIZE E | DRAWING NO. 2003959
DATE | SCALE NONE | SHEET 2 OF 3

REVISIONS			
SYM	DESCRIPTION	DATE	APPROVED
A	REVISED PER TDRR 27552 DR D. Magnelli CHK		
B	REVISD PER TDRR 27913 DR CHK J.J.		
C	REVISED PER TDRR 28178 DR CHK JV		

LEAD ELECTRICAL

COND IDENT	REMARKS	FROM	FIND NO.	COLOR	SIZE AWG	LENGTH	TO	REMARKS
D1		J10-1	7	BLUE	30	AR	TB1-71	
D2		-2					-64	
D3		-3					-69	
D4		-4					-81	
D5		-5					-77	
D6		-6					-79	
D7		-7					TB1-72	
D8		-8					TB2-73	
D9		-9					-91	
D10		-10					-66	
D11		-11					-84	
D12		-12					-90	
D13		-13					-82	
D14		-14					TB2-81	
D15		-15					TB1-62	
D16		-16					-56	
D17		-17					-60	
D18		-18					-65	
D19		-19					-74	
D20		-20					-86	
D21		-21					TB1-84	
D22		-22					TB2-71	
D23		-23					TB2-65	
D24		-24					TB2-70	
D25		-25					TB1-76	
D26		-26					TB2-87	
D27		-27					TB2-83	
D28		-28					TB2-86	
D29		-29					TB1-68	
D30	SEE NOTE 3	-30					TB1-57	SEE NOTE 5
D31		-37					TB1-87	
D32		-38					TB2-74	
D33		-39					TB2-67	
D34		-40					TB2-77	
D35		-41					TB1-42	
D36		-42					TB2-69	
D37		-43					-62	
D38		-44					-85	
D39		-45					-24	
D40		-46					-23	
D41		-53					-34	
D42		-54					TB2-38	
D43		-55					TB1-30	
D44		-56					TB2-37	
D45		-57					-57	
D46		-58					-50	
D47		-59					-22	
D48		-60					-26	
D49		-67					-39	
D50		-68					TB2-44	
D51		-69					TB1-25	
D52		-70					TB2-51	
D53		-71					TB2-43	
D54		-72					TB2-55	
D55		-73					TB1-37	
D56		-74					TB1-54	
D57		-81					TB2-27	
D58		-82					-52	
D59		-83					-58	
D60		-84					TB2-32	
D61		-85					TB1-31	
D62		-86					TB2-49	
D63		-87					TB2-31	
D64		-88					TB2-56	
D65		-95					TB1-83	
D66		-96					-24	
D67		-97					-45	
D68		-98					-23	
D69		-99					-19	
D70		-100					-60	
D71		-101					-32	
D72		J10-102	7	BLUE	30	AR	TB1-21	

LEAD ELECTRICAL

COND IDENT	REMARKS	FROM	FIND NO.	COLOR	SIZE AWG	LENGTH	TO	REMARKS
D73		J10-109	7	BLUE	30	AR	TB2-89	
D74		-110					TB1-18	
D75		-111					TB1-36	
D76		-112					TB2-98	
D77		-113					TB2-94	
D78		-114					TB2-97	
D79		-115					TB1-47	
D80		-116					-17	
D81		-123					-50	
D82		-124					-44	
D83		-125					TB1-49	
D84		-126					TB2-102	
D85		-127					TB2-101	
D86		-128					TB1-2	
D87		-129					-48	
D88		-130					-6	
D89		-137					-26	
D90		-138					-91	
D91		-139					-42	
D92		-140					TB1-15	
D93		-141					TB2-93	
D94		-142					TB1-8	
D95		-143					-53	
D96		-144					-10	
D97		-146					-20	
D98		-147					-46	
D99		-148					-52	
D100		-149					-35	
D101		-150					-59	
D102	SEE NOTE 3	-151					-38	SEE NOTE 5
D103		-152					-40	
D104		-153					TB1-55	
D105		-154					TB2-63	
D106		-155					-30	
D107		-156					-29	
D108		-157					TB2-25	
D109		-158					TB1-66	
D110		-159					TB1-67	
D111		-160					TB1-82	
D112		-145					TB1-3	
D113		-131					-14	
D114		-132					-11	
D115		-133					-33	
D116		-134					-41	
D117		-135					-39	
D118		-136					-1	
D119		-117					-7	
D120		-118					-16	
D121		-119					-28	
D122		-120					-27	
D123		-121					TB1-34	
D124		-122					TB2-100	
D125		-103					-76	
D126		-104					-78	
D127		-105					-75	
D128		-106					-80	
D129		-107					-88	
D130		-108					-79	
D131		-89					TB2-96	
D132		-90					TB1-85	
D133		-91					TB1-75	
D134		-92					TB2-92	
D135		-93					TB1-13	
D136		-94					TB1-63	
D137		-75					TB2-59	
D138		-76					-14	
D139		-77					-36	
D140		-78					-72	
D141		-79					-42	
D142		-80					-28	
D143		-61					-41	
D144		J10-62	7	BLUE	30	AR	TB2-64	

LEAD ELECTRICAL

COND IDENT	REMARKS	FROM	FIND NO.	COLOR	SIZE AWG	LENGTH	TO	REMARKS
D145		J10-63	7	BLUE	30	AR	TB2-1	
D146		-64					-17	
D147		-65					-53	
D148		-66					-33	
D149		-47					-47	
D150		-48					-68	
D151	SEE NOTE 3	-49					-7	SEE NOTE 5
D152		-50					-54	
D153		-51					-60	
D154		-52					TB2-46	
D155		-31					TB1-70	
D156		-32					-5	
D157		-33					-78	
D158		-34					-73	
D159		-35					-61	
D160		J10-36	7	BLUE	30		TB1-9	
D161		J11-21	8	WHT	26		TB2-10	
D162		-11					-103	
D163		-1					-59	
D164		-22					TB2-19	
D165		-12					TB1-12	
D166		-2					TB2-48	
D167		-23					-16	
D168		-15					-3	
D169		-3					-35	
D170		-24					-12	
D171		-4					-20	
D172		-13					-65	
D173		-25					-19	
D174	SEE NOTE 3	-6					TB2-40	SEE NOTE 5
D175		-5					TB1-4	
D176		-26					TB2-13	
D177		-16					TB2-9	
D178		-14					TB1-22	
D179		-27					TB2-21	
D180		-17					TB2-18	
D181		-7					TB1-29	
D182		-28					TB2-2	
D183		-18					TB2-5	
D184		-8					TB1-58	
D185		-29					TB2-11	
D186		-19					-6	
D187		-9					-95	
D188		-30					-4	
D189		-20					-8	
D190		J11-10	8	WHT	26	AR	TB2-61	

QTY REQD	PART OR IDENTIFYING NO	NOMENCLATURE OR DESCRIPTION	FIND NO
		LIST OF MATERIALS	

UNLESS OTHERWISE SPECIFIED DIMENSIONS ARE IN INCHES
TOLERANCES ON FRACTIONS DECIMALS ANGLES
DO NOT SCALE THIS DRAWING
MATERIAL
HEAT TREATMENT
FINAL FINISH
NEXT ASSY USED ON
APPLICATION

MIT INSTRUMENTATION LAB Cambridge, Mass

MANNED SPACECRAFT CENTER HOUSTON, TEXAS

DRAWN DATE
CHECKED
APPROVAL
APPROVAL

ADAPTER PLATE ASSY AGC DSKY

NASA APPROVAL
MIT APPROVAL

CODE IDENT NO 80230 | SIZE E | NASA DRAWING NO 2003959

SCALE NONE | WT | SHEET 3 OF 3

2003959 C

REVISIONS 26200						
SYM	ZONE	DESCRIPTION	DR	CHK	DATE	APPROVED

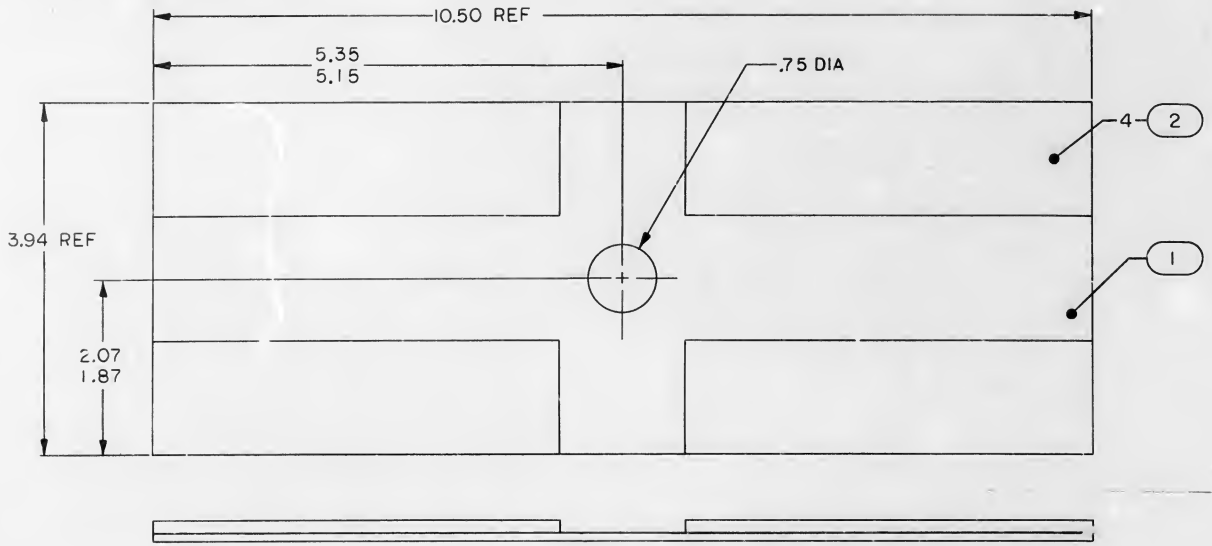

NOTES
1. INTERPRET DRAWING IN ACCORDANCE WITH STANDARDS PRESCRIBED BY MIL-D-70327
2. BOND FIND NO. 2 TO FIND NO. 1 PER ND100215I

QTY REQD	PART OR IDENTIFYING NO.	MATERIAL OR NOTES	NOMENCLATURE OR DESCRIPTION	FIND NO.
4	2004899-002		PAD, VIBRATION	2
1	2004899-003		PAD, VIBRATION	1

-011 LIST OF MATERIALS

NEXT ASSY	USED ON
2003200	
APPLICATION	

UNLESS OTHERWISE SPECIFIED
DIMENSIONS ARE IN INCHES
CAPACITOR VALUES ARE IN μf
RESISTOR VALUES ARE IN OHMS
TOLERANCES ON
FRACTIONS ± DECIMALS ± ANGLES ±
DO NOT SCALE THIS DRAWING
MATERIAL

MIT INSTRUMENTATION LAB
CAMBRIDGE, MASS.

MANNED SPACECRAFT CENTER
HOUSTON, TEXAS

DRAWN E. Wiring 9FEB66
CHECKED 10 FEB66
APPROVED 10 FEB66
APPROVED 11 FEB66
APPROVED MIT 11 FEB66
APPROVED MSC G. METZGER
DATE

VIBRATION PAD ASSY
AGC

CODE IDENT NO. 80230 | SIZE C | DRAWING NO. 2003970
SCALE 1/1 | SHEET 1 OF 1

REVISIONS

SYM	ZONE	DESCRIPTION	DR	CHK	DATE	APPROVED
A		REVISED PER TDRR 23233	BRT	BRT	10/23/66	
B		REVISED PER TDRR 24237	EQU		12/6/67	

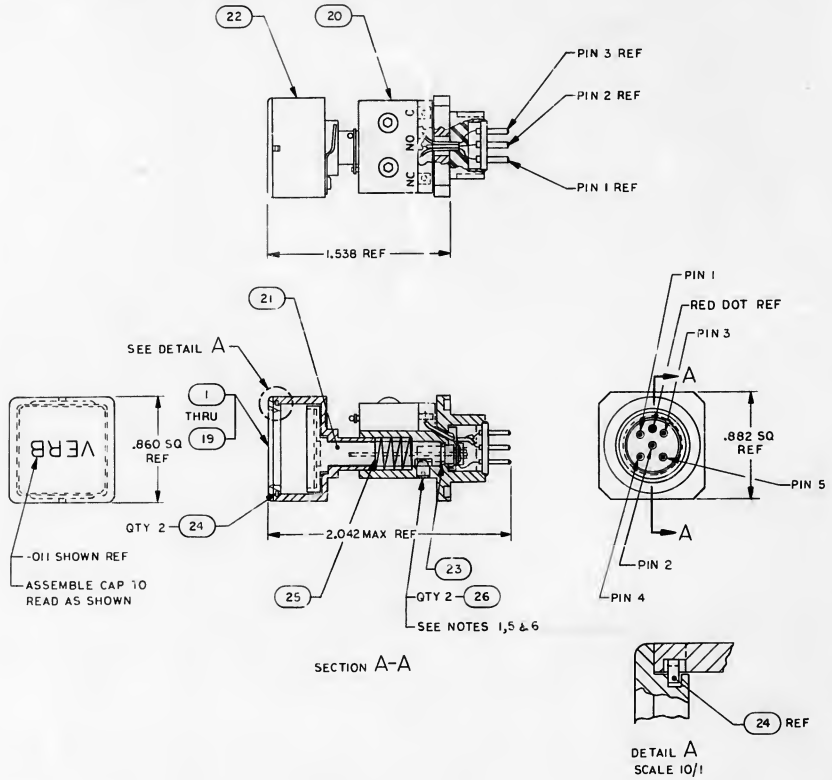

NOTES

1. STAKE FIND NO.26 TO FIND NO. 20 USING STAKING COMPOUND PER MIL-S-40083, CLASS 31
2. PINS INDICATED 1 THRU 5 ARE FOR REFERENCE ONLY AND ARE NOT TO BE MARKED
3. INTERPRET DRAWING IN ACCORDANCE WITH STANDARDS PRESCRIBED BY MIL-D-70327
4. IDENTIFY WITH PART NO. PER ND1002019
5. FIND NO.21 AND FIND NO.23 TO BE BOTTOM BEFORE ASSEMBLING FIND NO.26
6. MOUNTING TORQUE OF FIND NO.26 TO BE 2.5 TO 2.8 INCH POUNDS

QTY REQD 211	QTY REQD 191	QTY REQD 181	QTY REQD 171	QTY REQD 161	QTY REQD 151	QTY REQD 141	QTY REQD 131	QTY REQD 121	QTY REQD 111	QTY REQD 091	QTY REQD 081	QTY REQD 071	QTY REQD 061	QTY REQD 051	QTY REQD 041	QTY REQD 031	QTY REQD 021	QTY REQD 011	PART OR IDENTIFYING NO.	NOMENCLATURE OR DESCRIPTION	FIND
2	2	2	2	2	2	2	2	2	2	2	2	2	2	2	2	2	2	2	AN565DC4H3	SET-SCREW	26
1	1	1	1	1	1	1	1	1	1	1	1	1	1	1	1	1	1	1	2004941	SPRING, COMPRESSION	25
2	2	2	2	2	2	2	2	2	2	2	2	2	2	2	2	2	2	2	2004944	SPRING, CAP RETAINING	24
1	1	1	1	1	1	1	1	1	1	1	1	1	1	1	1	1	1	1	1006369	PACKING PREFORM	23
1	1	1	1	1	1	1	1	1	1	1	1	1	1	1	1	1	1	1	2003926-011	HOUSING ASSY (CAP)	22
1	1	1	1	1	1	1	1	1	1	1	1	1	1	1	1	1	1	1	2003975-011	SHAFT ASSY	21
1	1	1	1	1	1	1	1	1	1	1	1	1	1	1	1	1	1	1	2003933-011	HOUSING ASSY (MOUNTING)	20
1																		1	1006353-019	CAP, ELECTRICAL, ENGRAVED	19
	1																		-018		18
		1																	-017		17
			1																-016		16
				1															-015		15
					1														-014		14
						1													-013		13
							1												-012		12
								1											-011		11
									1										-010		10
										1									-009		9
											1								-008		8
												1							-007		7
													1						-006		6
														1					-005		5
															1				-004		4
																1			-003		3
																	1		-002		2
																		1	1006353-001	CAP, ELECTRICAL, ENGRAVED	1

LIST OF MATERIALS

2003953	
NEXT ASSY	USED ON
APPLICATION	

UNLESS OTHERWISE SPECIFIED DIMENSIONS ARE IN INCHES
CAPACITOR VALUES ARE IN μf
RESISTOR VALUES ARE IN OHMS
TOLERANCES ON
FRACTIONS ± DECIMALS ± ANGLES ±
DO NOT SCALE THIS DRAWING
MATERIAL

MIT INSTRUMENTATION LAB CAMBRIDGE, MASS.

DRAWN 8 JUL 66
CHECKED
APPROVED
APPROVED
APPROVED MIT
APPROVED MSC
DATE

MANNED SPACECRAFT CENTER HOUSTON, TEXAS

PUSH BUTTON SWITCH ASSEMBLY PLUG IN UNIT AGC DSKY

CODE IDENT NO. 80230 | SIZE D | DRAWING NO. 2003974

SCALE 2/1 | SHEET 1 OF 1

2003978 -

REVISIONS			
SYM	DESCRIPTION	DATE	APPROVAL

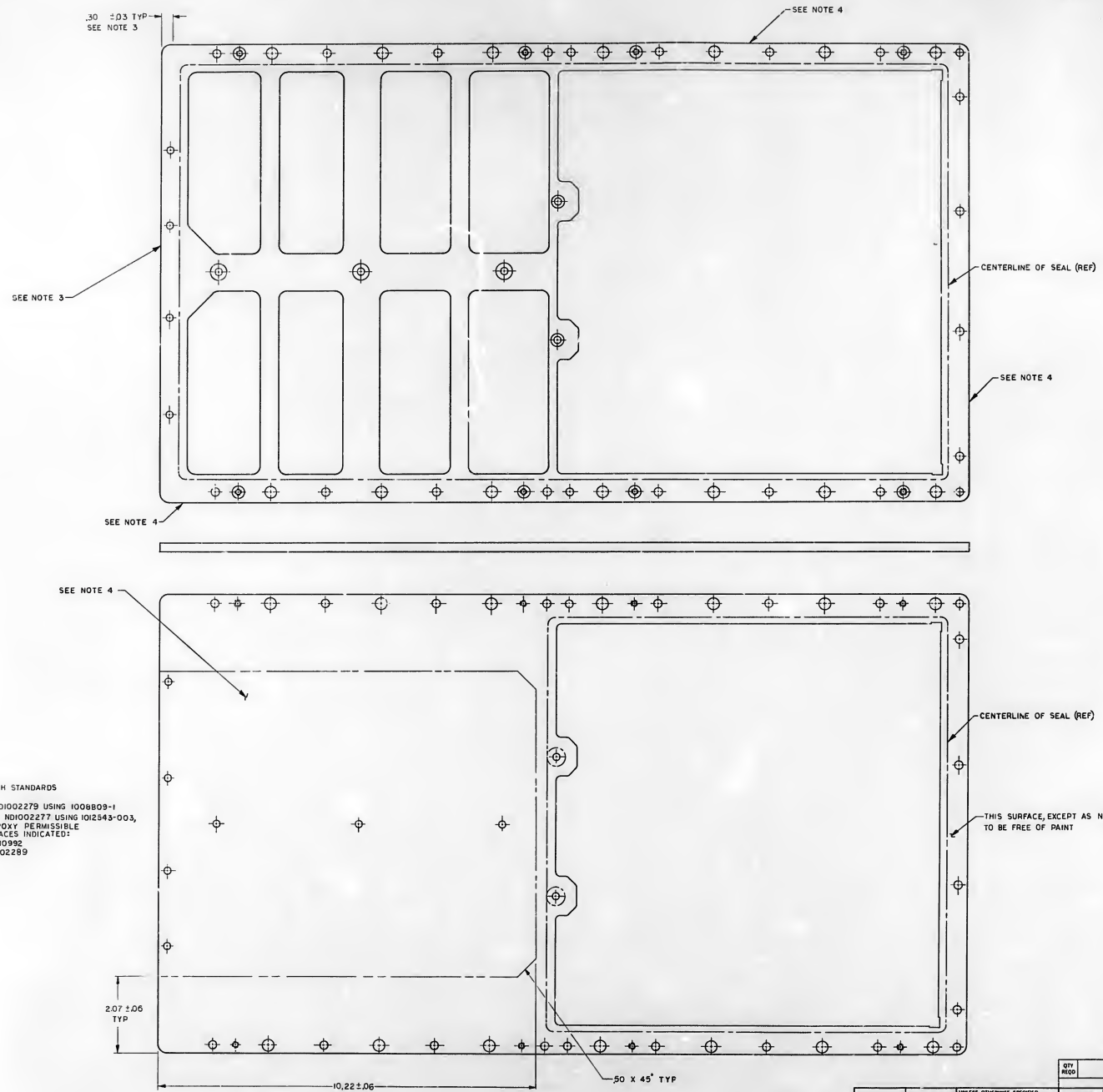

NOTES

1. MATL: MAKE FROM 1006381-001
2. INTERPRET DRAWING IN ACCORDANCE WITH STANDARDS PRESCRIBED BY MIL-D-70327
3. PAINT THIS EDGE INCLUDING RADII PER ND1002279 USING 1006809-1 (DARK GRAY), FINAL COAT SURFACES PER ND1002277 USING 1012543-003, OVERLAPPING THE AL FILLED CLEAR EPOXY PERMISSIBLE
4. APPLY THE FOLLOWING FINISHES TO SURFACES INDICATED: PRIMER ONLY PER ND1002279 USING 1010992 PAINT AL FILLED CLEAR EPOXY PER ND1002289
5. MASK ALL HOLES

2003200		
NEXT ASSY	USED ON	
APPLICATION		

UNLESS OTHERWISE SPECIFIED DIMENSIONS ARE IN INCHES
TOLERANCES ON
FRACTIONS ± DECIMALS ± ANGLES ±5°
DO NOT SCALE THIS DRAWING
MATERIAL SEE NOTE 1
HEAT TREATMENT
FINAL FINISH

MASTER

QTY REQD	PART OR IDENTIFYING NO	NOMENCLATURE OR DESCRIPTION	FIND NO
		LIST OF MATERIALS	

M I T
INSTRU. INTATION LAB
CAMBRIDGE MASS
DES. BY CONTRACT

MANNED SPACECRAFT CENTER
HOUSTON, TEXAS

DRAWN R.B.Rodwell DATE 12 Jan 66
CHECKED Bob Monk 14 Feb 66
APPROVAL J.D. Lenox 20 Feb 66
APPROVAL Edwin C. Hall 11 Mar 66
NASA APPROVAL Robert L. Boyle
MIT APPROVAL W. Wrigley

MID SPACER
PAINTED ASSEMBLY

CODE IDENT. NO. 80230 | SIZE E | NASA DRAWING NO. 2003978
SCALE 1/1 | WT | SHEET 1 OF 1

2003978

2003980 D

REVISIONS

SYM	DESCRIPTION	DATE	APPROVAL
A	REVISED PER TDRR 22163 DR		
B	REVISED PER TDRR 22540 DR		
C	REVISED PER TDRR 23229 DR		
D	REVISED PER TDRR 23955 DR		

ASSEMBLY INFORMATION CHART

REMARKS	FROM COND IDENT	FROM STA NO.	FROM DESTINATION	COLOR	AWG	FIND NO	TO STA NO.	TO DESTINATION	REMARKS
	B1	1	J9-37	YELLOW	26	1	37	J5-6	
	B2	1	J9-53				24	J3-12	
	B3	1	J9-80				28	J4-10	
	B4	1	J9-31				18	J2-11	
	B5	1	J9-19				34	J5-5	
	B6	1	J9-28				53	J12-199	
	B7	1	J9-61				38	J5-3	
	B8	1	J9-59				41	J5-12	
	B9	1	J9-81				30	J4-8	
	B10	1	J9-82				27	J4-2	
	B11	1	J9-54				31	J4-12	
	B12	1	J9-27				71	J4-86	
	B13	1	J9-83				29	J4-11	
	B14	1	J9-47				78	J3-85	
	B15	1	J9-14				41F	J6-2	
	B16	1	J9-4				44	J7-7	
	B17	1	J9-15				41H	J6-10	
	B18	1	J9-12				64	J6-90	
	B19	1	J9-32				41L	J6-8	
	B20	1	J9-26				73	J4-85	
	B21	1	J9-55				41D	J6-1	
	B22	1	J9-46				83	J2-85	
	B23	1	J9-84				41K	J6-11	
	B24	1	J9-72				86	J1-85	
	B25	1	J9-5				45	J7-5	
	B26	1	J9-3				79	J3-89	
	B27	1	J9-16				23	J3-15	
	B28	1	J9-11				65	J5-91	
	B29	1	J9-33				25	J3-20	
	B30	1	J9-25				67	J5-86	
	B31	1	J9-56				19	J3-21	
	B32	1	J9-45				82	J6-86	
	B33	1	J9-79				48	J12-211	SEE NOTE 3
	B34	1	J9-71				81	J2-86	
	B35	1	J9-1				46	J7-3	
	B36	1	J9-2				87	J1-90	
	B37	1	J9-6				40	J5-15	
	B38	1	J9-10				72	J4-90	
	B39	1	J9-17				41A	J5-20	
	B40	1	J9-24				70	J4-91	
	B41	1	J9-34				32	J5-21	
	B42	1	J9-44				76	J3-86	
	B43	1	J9-49				51	J12-206	
	B44	1	J9-70				85	J1-86	
	B45	1	J9-51				43	J12-212	
	B46	1	J9-8				47	J7-2	
	B47	1	J9-7				43	J7-11	
	B48	1	J9-9				88	J1-89	
	B49	1	J9-18				63	J6-85	
	B50	1	J9-23				74	J4-89	
	B51	1	J9-35				39	J5-11	
	B52	1	J9-43				75	J3-91	
	B53	1	J9-58				35	J5-1	
	B54	1	J9-69				68	J5-85	
	B55	1	J9-78				52	J12-198	
	B56	1	J9-21				42	J7-9	
	B57	1	J9-36				41G	J6-6	
	B58	1	J9-22				82	J2-90	
	B59	1	J9-48				54	J12-200	
	B60	1	J9-42				66	J5-90	
	B61	1	J9-77				59	J12-188	
	B62	1	J9-68				80	J2-91	
	B63	1	J9-30				60	J12-180	
	B64	1	J9-57			1	15	J2-1	
	B65	1	J9-60			1	41J	J6-3	
	B66	1	J9-40	YELLOW		5	55	J12-193	TWIST
	B67	1	J9-38	RED		5	56	J12-194	SEE NOTE 3
	B68	1	J9-41	YELLOW		1	84	J2-89	
	B69	1	J9-76				50	J12-205	
	B70	1	J9-67				69	J5-89	
	B71	1	J9-85				41C	J6-5	
	B72	1	J9-64				14	J1-3	
	B73	1	J9-63				61	J12-181	
	B74	1	J9-65				58	J12-186	
	B75	1	J9-62				16	J2-10	SEE NOTE 3
	B76	1	J9-66	YELLOW		1	77	J3-90	
	B77	1	J9-39	BLK		7	57	J12-184	
	B78	41M	J6-64	YELLOW		1	36	J5-10	
	B79	41E	J6-9				20	J3-9	
SEE NOTE 3	B80	17	J2-3				22	J3-3	
	B81	21	J3-10				33	J5-9	
	B82	26	J3-64	YELLOW	26	1	41B	J5-64	

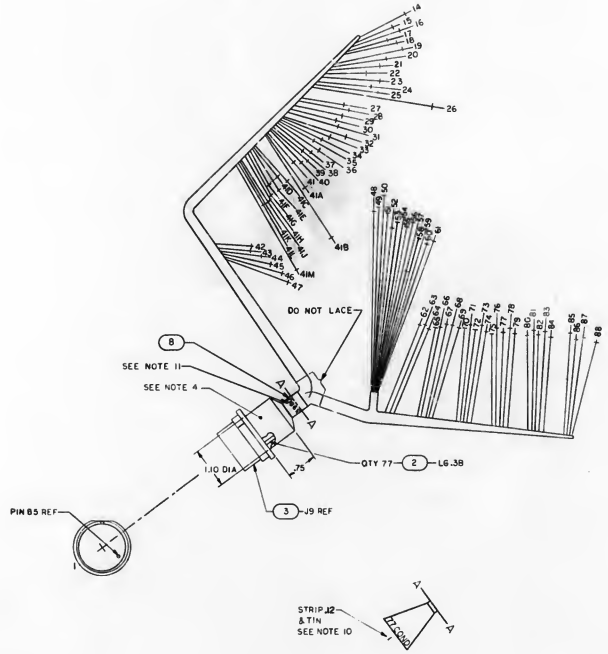

NOTES

1. INTERPRET DRAWING IN ACCORDANCE WITH STANDARDS PRESCRIBED BY MIL-D-70327
2. FABRICATE PER ND1002032
3. UNLESS OTHERWISE SPECIFIED STRIP ALL LEADS .20 AND TIN
4. POT INDICATED AREA PER ND1002236
5. AR DENOTES AS REQUIRED
6. IDENTIFY WITH PART NO. PER ND1002019
7. PARTIAL REFERENCE DESIGNATIONS ARE SHOWN: PREFIX DESIGNATION WITH UNIT NUMBER OR ASSEMBLY DESIGNATION OR BOTH
8. LACE ENTIRE HARNESS CONFIGURATION UNLESS OTHERWISE SPECIFIED USING FIND NO. 4
9. DO NOT APPLY HEAT GREATER THAN 250° F TO FIND NO. 2
10. SOLDER PER ND1002071 USING ND1002075
11. MARK .060/.100 HIGH BLACK CHARACTERS PER ND1002019 AND ND1002122, TYPE II, CLASS 2 USING INK 1006271-1 CENTRALIZE AS SHOWN

QTY REQD	PART OR IDENTIFYING NO	NOMENCLATURE OR DESCRIPTION	FIND NO
1	MS18035-1-2	STRAP, CABLE	8
* 1.0	1010789-024	WIRE, INSULATED	7
* 1.0	1010789-01	WIRE, INSULATED	6
* 1.0	1010789-017	WIRE, INSULATED	5
AR	1012507-003	TAPE, LACING	4
1	1006361-003	CONNECTOR, RECEPTACLE	3
* 2.5	1006322-004	SLEEVING, INSULATION	2
* 1.42	1010789-016	WIRE, INSULATED	1

-011 LIST OF MATERIALS

* DENOTES LENGTH IN FEET

UNLESS OTHERWISE SPECIFIED DIMENSIONS ARE IN INCHES TOLERANCES ON FRACTIONS - DECIMALS ±.06 ANGLES - DO NOT SCALE THIS DRAWING MATERIAL	
HEAT TREATMENT	
FINAL FINISH	
NEXT ASSY	USED ON
APPLICATION	

NIT INSTRUMENTATION LAB Grumman Aerospace

DR. G. G. Rodriguez DATE 20 Jun 65
CHECKED
APPROVAL
APPROVAL
NASA APPROVAL
NIT APPROVAL

MANNED SPACECRAFT CENTER HOUSTON, TEXAS

WIRING HARNESS, BRANCHED AGC DSKY

2003954

CODE IDENT NO	SIZE	NASA DRAWING NO
80230	J	2003980
SCALE 1/1	WT	SHEET 1 OF 1

2003980 D

R9, R10	
PART NO.	VALUE
1006750-25	510
-26	560
-27	620
-28	680
-29	750
-30	820
-31	910
-32	1K
-33	1.1K
-34	1.2K
-35	1.3K
-36	1.5K
-37	1.6K
-38	1.8K
-39	2.0K
-40	2.2K
-41	2.4K
-42	2.7K
-43	3.0K
-44	3.3K
-45	3.6K
-46	3.9K
-47	4.3K
-48	4.7K
-49	5.1K
-16	220
-17	240
-18	270
-19	300
-20	330
-21	360
-22	390
-23	430
1006750-24	470

R23, R27, R32	
PART NO.	VALUE
1006750-32	1K
-33	1.1K
-34	1.2K
-35	1.3K
-36	1.5K
-37	1.6K
-38	1.8K
-39	2.0K
-40	2.2K
-41	2.4K
-42	2.7K
-43	3.0K
-44	3.3K
-45	3.6K
-46	3.9K
-47	4.3K
-48	4.7K
-49	5.1K
-119	1.4K
-121	1.7K
-122	1.9K
-123	2.1K
-124	2.3K
-125	2.55K
-126	2.85K
-127	3.15K
-128	3.45K
-129	3.75K
1006750-130	4.1K

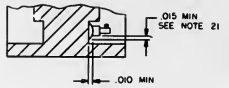

SECTION B-B

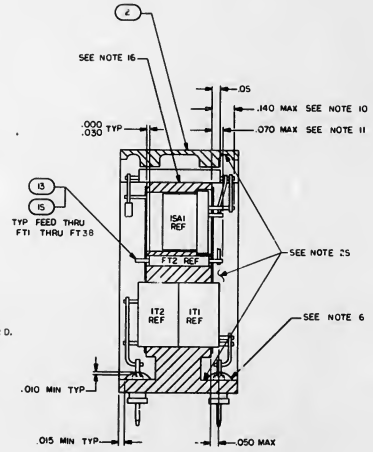

SECTION A-A

NOTES:

1. INTERPRET DRAWING IN ACCORDANCE WITH STANDARDS PRESCRIBED BY MIL-D-70327
2. AR DENOTES AS REQUIRED
3. FT DENOTES FEED THRU
4. (+) DENOTES POSITIVE SIDE OF CAPACITOR
5. K DENOTES CATHODE SIDE OF DIODE
6. SEAL INSULATORS AND TERMINALS TO HEADER PER ND1002004, TYPE VI
7. MARK 10/08 HIGH WHITE CHARACTERS PER ND1002019 AND ND1002122, TYPE II, CLASS 2 AND SERIALIZE PER ND1002023 USING INK 1006271-1
8. MARK 26/24 HIGH WHITE CHARACTERS PER ND1002019 AND ND1002122, TYPE II, CLASS 2 USING INK 1006271-1
9. UNLESS OTHERWISE SPECIFIED, ALL WIRING SHALL BE IN ACCORDANCE WITH ND1002069
10. BLACK DOT AND SINGLE SOLID LEADS INDICATE UPPER LEVEL WIRING
11. WHITE DOT AND SINGLE DOTTED LEADS INDICATE LOWER LEVEL WIRING
12. THE VALUES OF THE FOLLOWING COMPONENTS TO BE DETERMINED AT ELECTRICAL TEST R9, R10, R23, R27 AND R32 TO BE SELECTED FROM APPROPRIATE CHART
13. STAKE FIND NO. 16 THRU FIND NO. 37, FIND NO. 42, 43 AND 44. TO FIND NO. 1 PER ND1002009 METHOD C OR D.
14. ENCAPSULATE PER ND1002002. REMOVE FLASHING
15. WELD PER ND1002005
16. BOND FIND NO. 3 TO FIND NO. 1 PER ND1002004 TYPE I
17. TRIM UNUSED LEAD OF FIND NO. 37 .010-.030 FROM CASE
18. MOUNTING TORQUE FOR FIND NO. 9 TO BE 15-20 INCH OUNCES
19. COMPLETED ASSEMBLY SHALL BE TESTED IN ACCORDANCE WITH AND SHALL MEET ALL THE REQUIREMENTS OF PS. 2003981
20. CR7, 8, 15 AND CR12, 13, 14 ARE TO BE SELECTED BY ELECTRICAL TEST. ONE, TWO, OR THREE DIODES WILL BE SELECTED IN EACH AREA. IF LESS THAN THREE DIODES ARE REQUIRED, FIND NO. 13 AND 15 WILL BE USED IN THE REMAINING COMPONENT HOLES AND WIRING WILL BE COMPLETED AS SHOWN
21. SEAL FIND NO. 9 TO HEADER PER ND1002004, TYPE VI
22. ASSEMBLE FIND NO. 39 TO MODULE AFTER SELECTED VALUE HAS BEEN DETERMINED
23. MOUNTING TORQUE FOR FIND NO. 8 TO BE 2.0-2.5 INCH POUNDS
24. USE FIND NO. 34 & FIND NO. 41 WHERE APPLICABLE ON ALL FIRST LEVEL WIRING TO THE MATRIX
25. COAT INDICATED SURFACES, BOTH ENDS, TOP AND BOTTOM, BOTH SIDES PER ND1002187, TYPE II
26. APPLY MIL-S-22473, GRADE HV TO FIND NO. 8

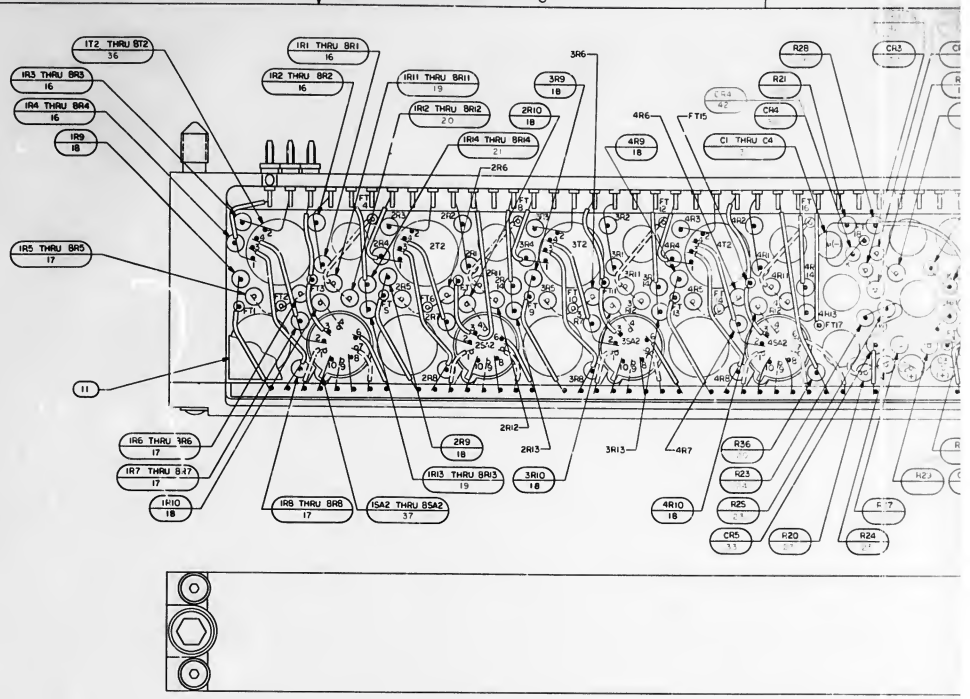

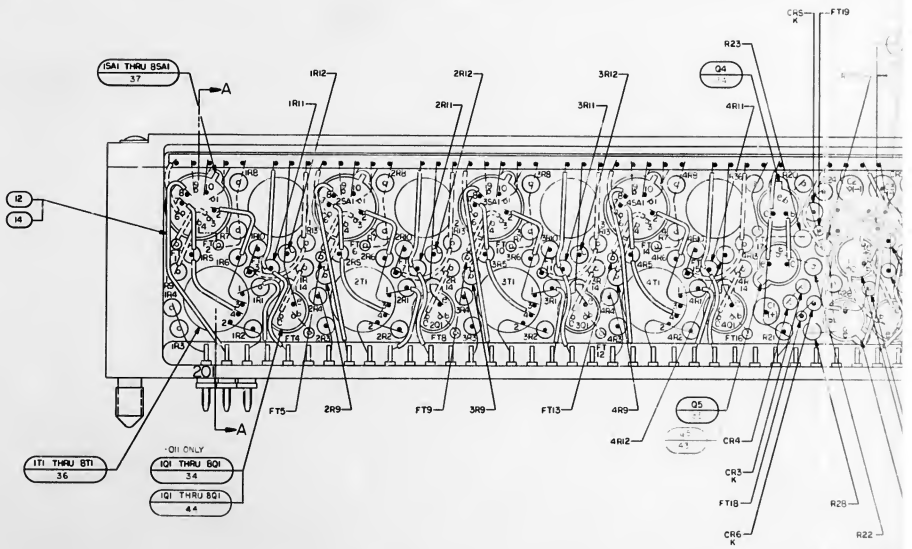

2003981 B

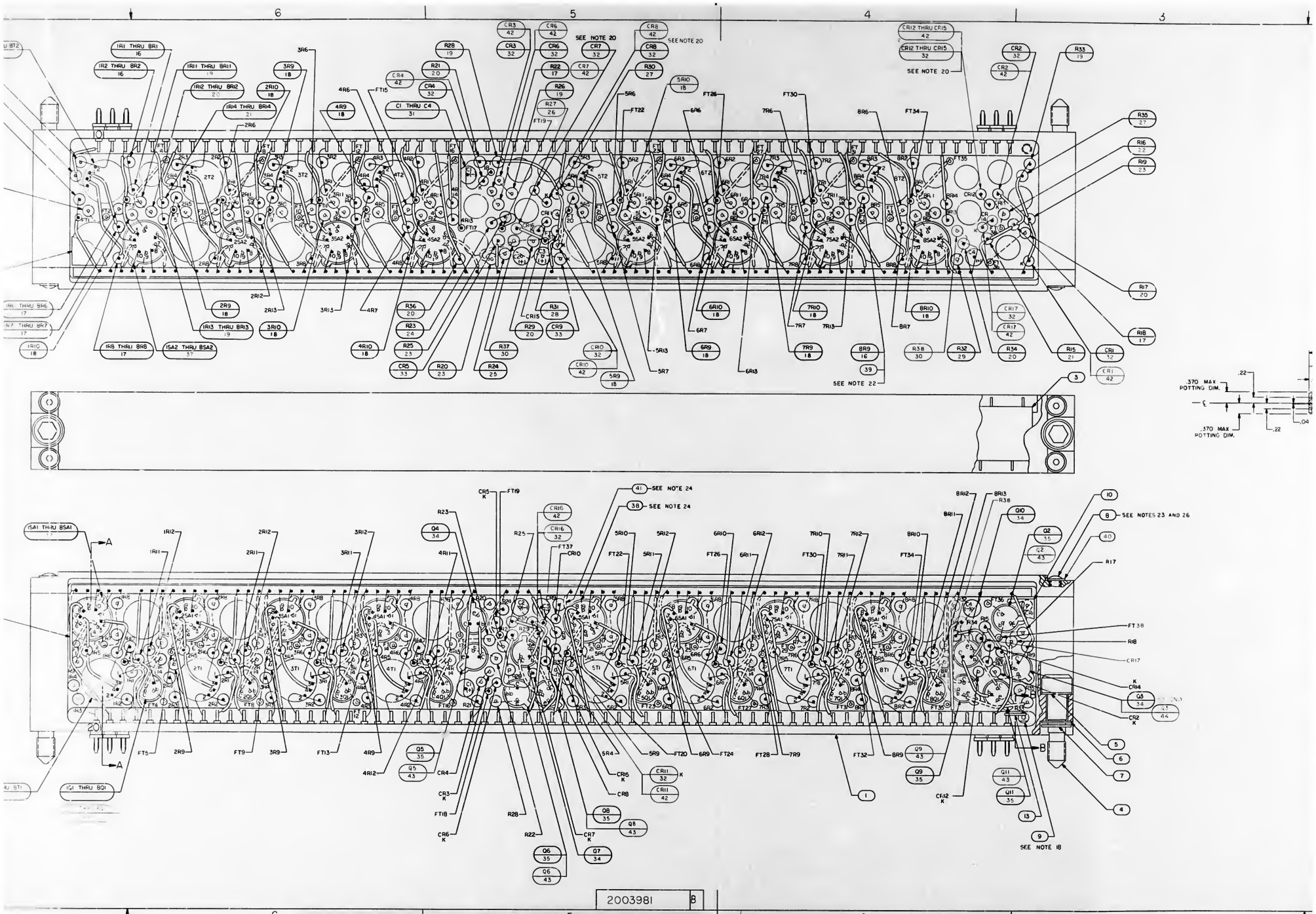
SEE NOTE 20
SEE NOTE 22
SEE NOTE 24
SEE NOTES 23 AND 26
SEE NOTE 18
.370 MAX POTTING DIM.
.22
.04
2003981
B

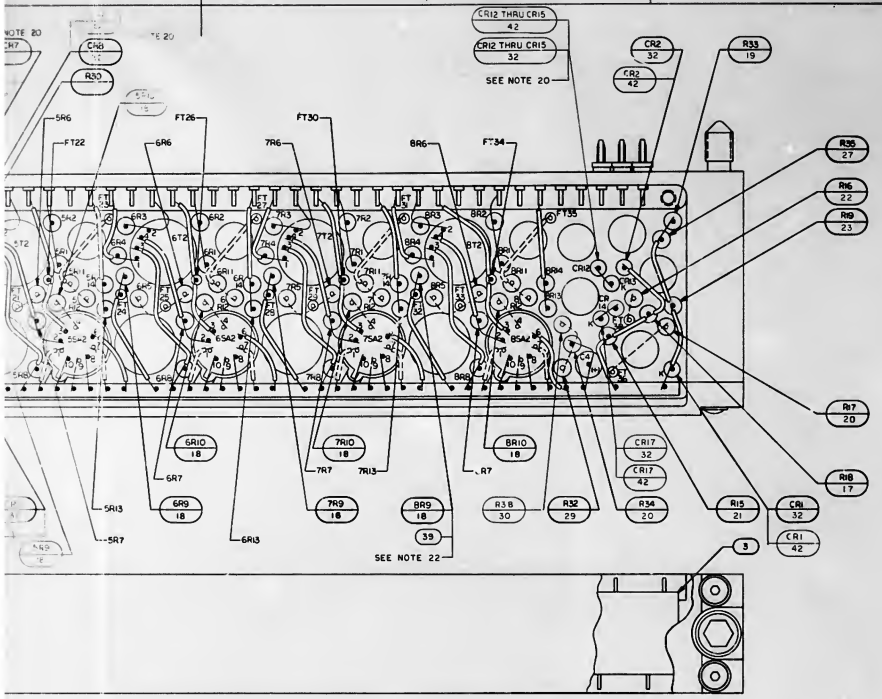

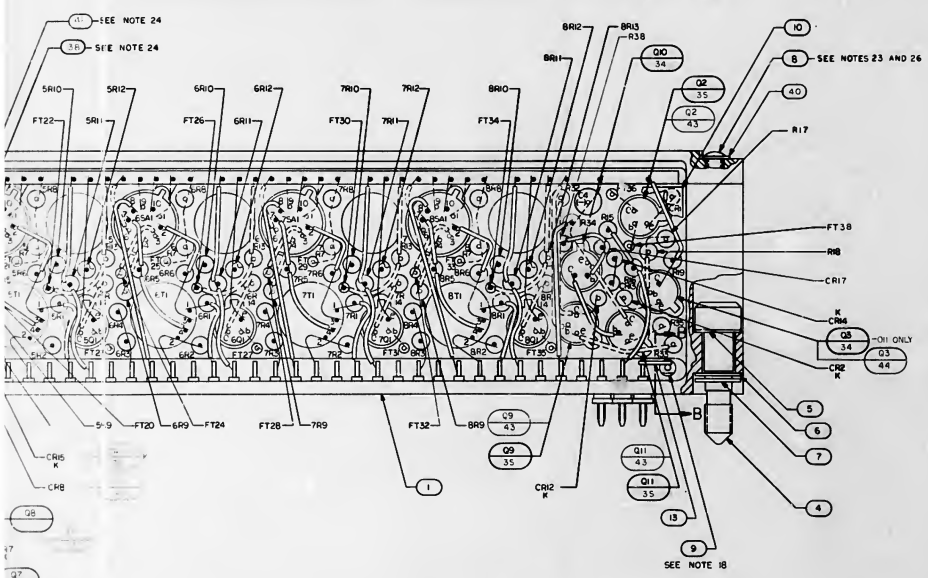

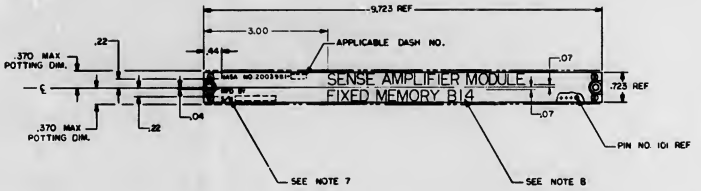

MARKING VIEW
SCALE 1/1

X	–	2005929	SCHEMATIC	REF
–	X	2005919	SCHEMATIC	REF
9	–	2004004-006	TRANSISTOR POTTED	44
6	–	2004164-001	TRANSISTOR POTTED	43
15	–	2004183-001	DIODE	42
AR	AR	1006776-25	INSULATION, SLEEVING	41
4	4	NAS620A-2	WASHER, FLAT	40
19	19	2004074	WASHER, INSULATOR	39
AR	AR	1006757-12	WIRE, ELECTRICAL	38
16	16	2004003-001	INTEGRATED SENSE AMPL	37
16	16	1006293	TRANSFORMER	36
–	6	2004004-001	TRANSISTOR, POTTED	35
3	12	2004004-002	TRANSISTOR, POTTED	34
2	2	2004112-002	DIODE	33
–	15	2004103-001	DIODE	32
4	4	1006755-69	CAPACITOR	31
2	2	1006750-63	RESISTOR	30
1	1	SEE NOTES 12 & 22	RESISTOR	29
1	1	1006750-43	RESISTOR	28
2	2	1006750-12	RESISTOR	27
1	1	SEE NOTES 12 & 22	RESISTOR	26
1	1	1006750-25	RESISTOR	25
1	1	SEE NOTES 12 & 22	RESISTOR	24
3	3	1006750-36	RESISTOR	23
1	1	1006750-15	RESISTOR	22
9	9	1006750-49	RESISTOR	21
13	13	1006750-39	RESISTOR	20
19	19	1006750-32	RESISTOR	19
15	16	SEE NOTES 12 & 22	RESISTOR	18
34	34	1006750-24	RESISTOR	17
32	32	1006750-42	RESISTOR	16
AR	AR	1006776-22	INSULATION, SLEEVING	15
AR	AR	1006776-21	INSULATION, SLEEVING	14
AR	AR	1006757-8	WIRE, ELECTRICAL	13
AR	AR	1006757-1	WIRE, ELECTRICAL	12
1	1	2004711	INSULATOR B	11
1	1	2004710	INSULATOR A	10
1	1	2004039	TERMINAL, THREADED	9
4	4	1006783-10	SCREW, BUTTON HEAD	8
2	2	MS16633-401K	RING, RETAINING, EXTERNAL E	7
2	2	2004984-003	WASHER, FLAT	6
2	2	2004984-001	WASHER, FLAT	5
2	2	1004579-1	SCREW, JACKING	4
1	1	2003005-011	MATRIX ASSY	3
1	1	2004044	COVER	2
1	1	2003044-021	HEADER HOUSING ASSY	1
QTY REQD -021	QTY REQD -011	PART OR IDENTIFYING NO.	NOMENCLATURE OR DESCRIPTION	FIND NO.

LIST OF MATERIALS

REVISIONS					
SYM	ZONE	DESCRIPTION	BY	CHK	DATE
A		REVISE PER TDRR 28247			
B		REVISED PER TDRR 32561			

2F035

UNLESS OTHERWISE SPECIFIED DIMENSIONS ARE IN INCHES
CAPACITOR VALUES ARE IN μf
RESISTOR VALUES ARE IN OHMS
TOLERANCES ON
FRACTIONS ± DECIMALS ± ANGLES ±
±.02
DO NOT SCALE THIS DRAWING
MATERIAL

2003213
2003210
NEXT ASSY
USED ON
APPLICATION

MIT INSTRUMENTATION LAB
CAMBRIDGE, MASS.

DRAWN E. Cheney
CHECKED
APPROVED
APPROVED
APPROVED MIT
APPROVED NASA

MANNED SPACECRAFT CENTER
HOUSTON, TEXAS

SENSE AMPLIFIER MODULE, FIXED MEMORY B14 ASSEMBLY

CODE IDENT NO. 80230 SIZE J DRAWING NO. 2003981

SCALE 4/1 SHEET 1 OF 1

2003981

REVISIONS

SYM	ZONE	DESCRIPTION	DR	CHK	DATE	APPROVED
A		CHANGED PER TDRR 30753			9-2-66	
B		CHANGED PER TDRR 32350			11/7/67	

PROC SPEC NUMBER	SUBSYSTEM NUMBER	AGC NUMBER	RAY. SERIAL NUMBER REF	DSKY NUMBER	RAY. SERIAL NUMBER REF	RAY. SERIAL NUMBER REF	KIT ASSY NUMBER
2016005	C1	2003200-011	16	2003950-011	27	28	2004199-011
2016005	C2	2003200-011	22	2003950-011	20		6004000-011
2016005	C1	2003200-021	16	2003950-011	27	28	2004199-011
2016005	C2	2003200-021	22	2003950-011	20		6004000-011

FOR REFERENCE ONLY

NOTES

1. INTERPRET DRAWING IN ACCORDANCE WITH STANDARDS PRESCRIBED BY MIL-D-70327

NEXT ASSY	USED ON
APPLICATION	

UNLESS OTHERWISE SPECIFIED DIMENSIONS ARE IN INCHES
CAPACITOR VALUES ARE IN μf
RESISTOR VALUES ARE IN OHMS
TOLERANCES ON
FRACTIONS DECIMALS ANGLES
DO NOT SCALE THIS DRAWING
MATERIAL

QTY REQD	PART OR IDENTIFYING NO.	MATERIAL OR NOTES	NOMENCLATURE OR DESCRIPTION	FIND NO.

LIST OF MATERIALS

MIT INSTRUMENTATION LAB
CAMBRIDGE, MASS.

MANNED SPACECRAFT CENTER
HOUSTON, TEXAS

DRAWN 9 MAY 1966
CHECKED
APPROVED
APPROVED

APOLLO GUIDANCE COMPUTER SUBSYSTEM

APPROVED MIT 6-7-66
APPROVED MSC A. C. METZGER DATE

CODE IDENT NO. 80230 | SIZE D | DRAWING NO. 2003991

SCALE NONE | SHEET 1 OF 1

2003991 B

REVISIONS 28820

SYM	ZONE	DESCRIPTION	DR	CHK	DATE	APPROVED
A		CHANGED PER TDRR 30753	JTR	DZ	4-2-66	RSS
B		CHANGED PER TDRR 32350		JC	1/17/67	T.P.R.
C		CHANGED PER TDRR 33043		DZ	3/14/67	T.P.R.

PROC SPEC NUMBER	COMPUTER SUB-SYSTEM	AGC NUMBER	RAY. SERIAL NUMBER REF	KIT ASSY NUMBER	DSKY NUMBER	DSKY SUB-SYSTEM NO.	RAY. SERIAL NUMBER REF.	RAY SERIAL NUMBER REF.
2016005	C1	2003200-011	16	2004199-011	2003950-011		27	28
2016005	C2	2003200-011	22	6004000-011	2003950-011		20	
2016005	C1	2003200-021	16	2004199-011			27	28
2016005	C2	2003200-021	22	6004000-011			20	
	C1	2003200-031	16	2004199-011			19	
	C2		22	6004000-011			20	
	C3		17	6004000-011			27	
	C4		18	2004199-011			28	
	C5		19	6004000-011			30	
	C6		20	2004199-011			31	
2016005	C7	2003200-031	23	6004000-011			32	
					2003950-011		33	
					2003994-011	D	34	
						D2	35	
						D3	36	
					2003994-011	D4	37	

FOR REFERENCE ONLY

NOTES

1. INTERPRET DRAWING IN ACCORDANCE WITH STANDARDS PRESCRIBED BY MIL-D-70327

NEXT ASSY	USED ON
APPLICATION	

UNLESS OTHERWISE SPECIFIED
DIMENSIONS ARE IN INCHES
CAPACITOR VALUES ARE IN μf
RESISTOR VALUES ARE IN OHMS
TOLERANCES ON
FRACTIONS DECIMALS ANGLES
* * *
DO NOT SCALE THIS DRAWING
MATERIAL

QTY REQD	PART OR IDENTIFYING NO.	MATERIAL OR NOTES	NOMENCLATURE OR DESCRIPTION	FIND NO.

LIST OF MATERIALS

MIT INSTRUMENTATION LAB
CAMBRIDGE, MASS

MANNED SPACECRAFT CENTER
HOUSTON, TEXAS

DRAWN 9 MAY 1966
CHECKED
APPROVED
APPROVED

APOLLO GUIDANCE COMPUTER SUBSYSTEM

APPROVED MIT 6-7-66
APPROVED MSC A. C. MEYGER

CODE IDENT NO 80230 | SIZE D | DRAWING NO. 2003991

DATE | SCALE NONE | SHEET 1 OF 1

2003991 C

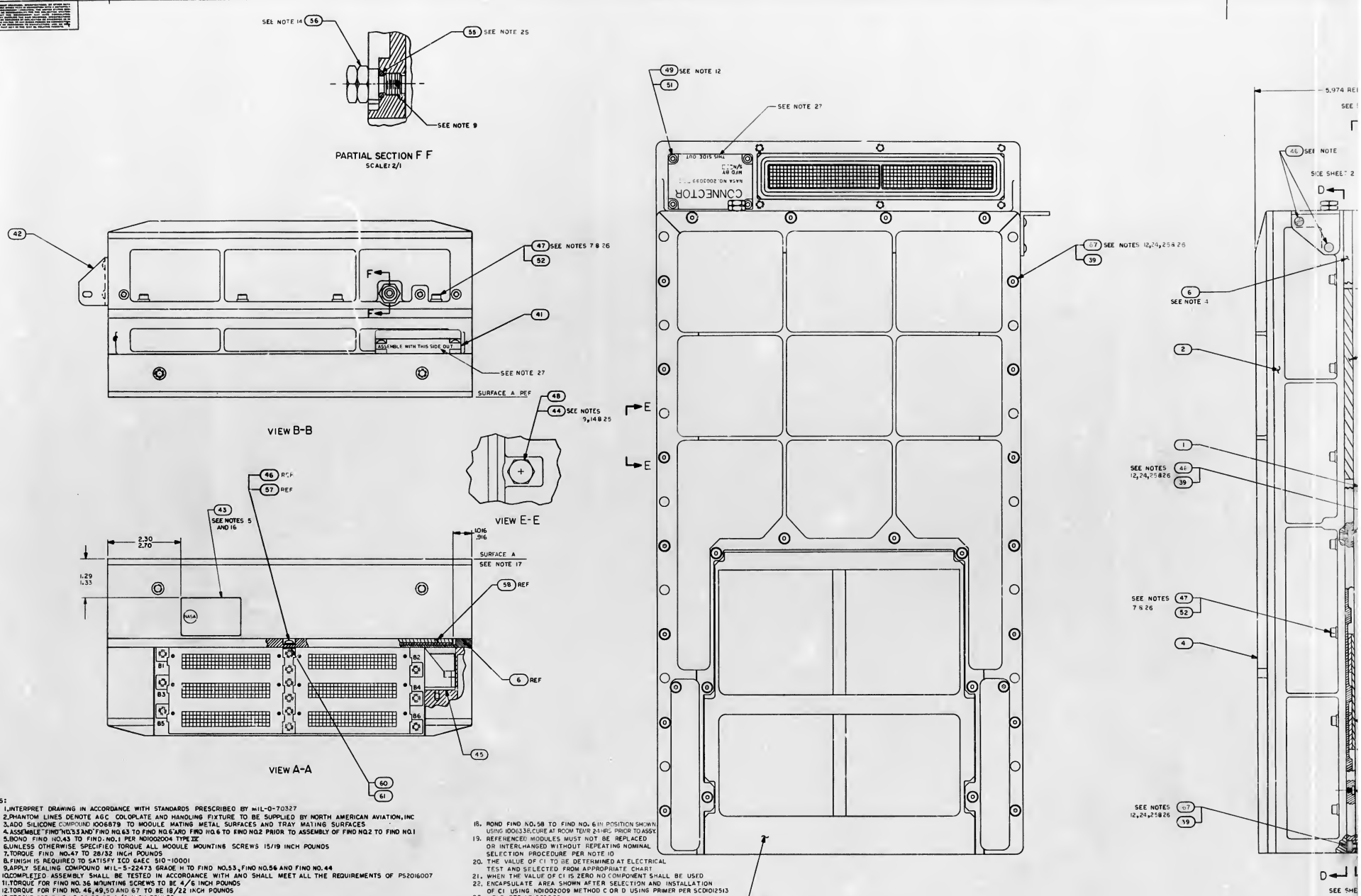

NOTES:

1. INTERPRET DRAWING IN ACCORDANCE WITH STANDARDS PRESCRIBED BY MIL-D-70327
2. PHANTOM LINES DENOTE AGC COLDPLATE AND HANDLING FIXTURE TO BE SUPPLIED BY NORTH AMERICAN AVIATION, INC
3. ADD SILICONE COMPOUND 1006879 TO MODULE MATING METAL SURFACES AND TRAY MATING SURFACES
4. ASSEMBLE FIND NO. 33 AND FIND NO. 63 TO FIND NO. 6 & ARD FIND NO. 6 TO FIND NO. 2 PRIOR TO ASSEMBLY OF FIND NO. 2 TO FIND NO. 1
5. BOND FIND NO. 43 TO FIND NO. 1 PER ND1002004 TYPE IX
6. UNLESS OTHERWISE SPECIFIED TORQUE ALL MODULE MOUNTING SCREWS 15/19 INCH POUNDS
7. TORQUE FIND NO. 47 TO 28/32 INCH POUNDS
8. FINISH IS REQUIRED TO SATISFY ICD GAEC S10-10001
9. APPLY SEALING COMPOUND MIL-S-22473 GRADE H TO FIND NO. 53, FIND NO. 56 AND FIND NO. 44
10. COMPLETED ASSEMBLY SHALL BE TESTED IN ACCORDANCE WITH AND SHALL MEET ALL THE REQUIREMENTS OF PS2016007
11. TORQUE FOR FIND NO. 36 MOUNTING SCREWS TO BE 4/6 INCH POUNDS
12. TORQUE FOR FIND NO. 46, 49, 50 AND 67 TO BE 18/22 INCH POUNDS
13. TORQUE FOR FIND NO. 53 TO BE 4/6 INCH POUNDS
14. TORQUE FOR FIND NO. 44 AND FIND NO. 56 TO BE 137/157 INCH POUNDS
15. FIND NO. 40 SHALL BE SUPPLIED AS PART OF THIS ASSEMBLY
16. MARK COMPUTER ASSEMBLY AND RELATED PART NO., APPLICABLE DASH NO., SERIAL NO. AND CONTRACT NO. PER ND04250 AND SERIALIZE PER ND1002023
17. FINISH SURFACE [A-A] PER ICD NAA MH01-01302-116 THIS ASSEMBLY MUST BE CAPABLE OF MEETING ELECTRICAL BONDING REQUIREMENTS OF ICD NAA MH01-01302-116
18. BOND FIND NO. 58 TO FIND NO. 6 IN POSITION SHOWN USING 1006338. CURE AT ROOM TEMP 24 HRS PRIOR TO ASSY.
19. REFERENCED MODULES MUST NOT BE REPLACED OR INTERCHANGED WITHOUT REPEATING NOMINAL SELECTION PROCEDURE PER NOTE 10
20. THE VALUE OF C1 TO BE DETERMINED AT ELECTRICAL TEST AND SELECTED FROM APPROPRIATE CHART
21. WHEN THE VALUE OF C1 IS ZERO NO COMPONENT SHALL BE USED
22. ENCAPSULATE AREA SHOWN AFTER SELECTION AND INSTALLATION OF C1 USING ND1002009 METHOD C OR D USING PRIMER PER SCD1012513
23. WELD PER ND1002005
24. ASSEMBLE HARDWARE WITH SMOOTH FACE OF FIND NO. 39 IN CONTACT WITH SCREW HEAD
25. FIND NO. 39, 48, 55 & 57 TO BE DISCARDED AND REPLACED WITH NEW PARTS EACH TIME THEY ARE DISASSEMBLED
26. SEAL EXPOSED HARDWARE ASSEMBLIES WITH .002 MIN THICK COATING OF FIND NO. 66. OVERALL COMPUTER ASSEMBLY DIMENSIONS SHALL NOT BE EXCEEDED. CURE AT ROOM TEMP 24 HRS
27. STENCILING SHOWN FOR ORIENTATION ONLY
28. KEEP ALL MATING THREADS OF SCREWS, TRAY AND MID SPACER INSERTS FREE OF SILICONE COMPOUND.

2003993 | A

REVISIONS					
SYM	ZONE	DESCRIPTION	DR	CHK	DATE	APPROVED
A		INITIAL RELEASE TDRR 33593				

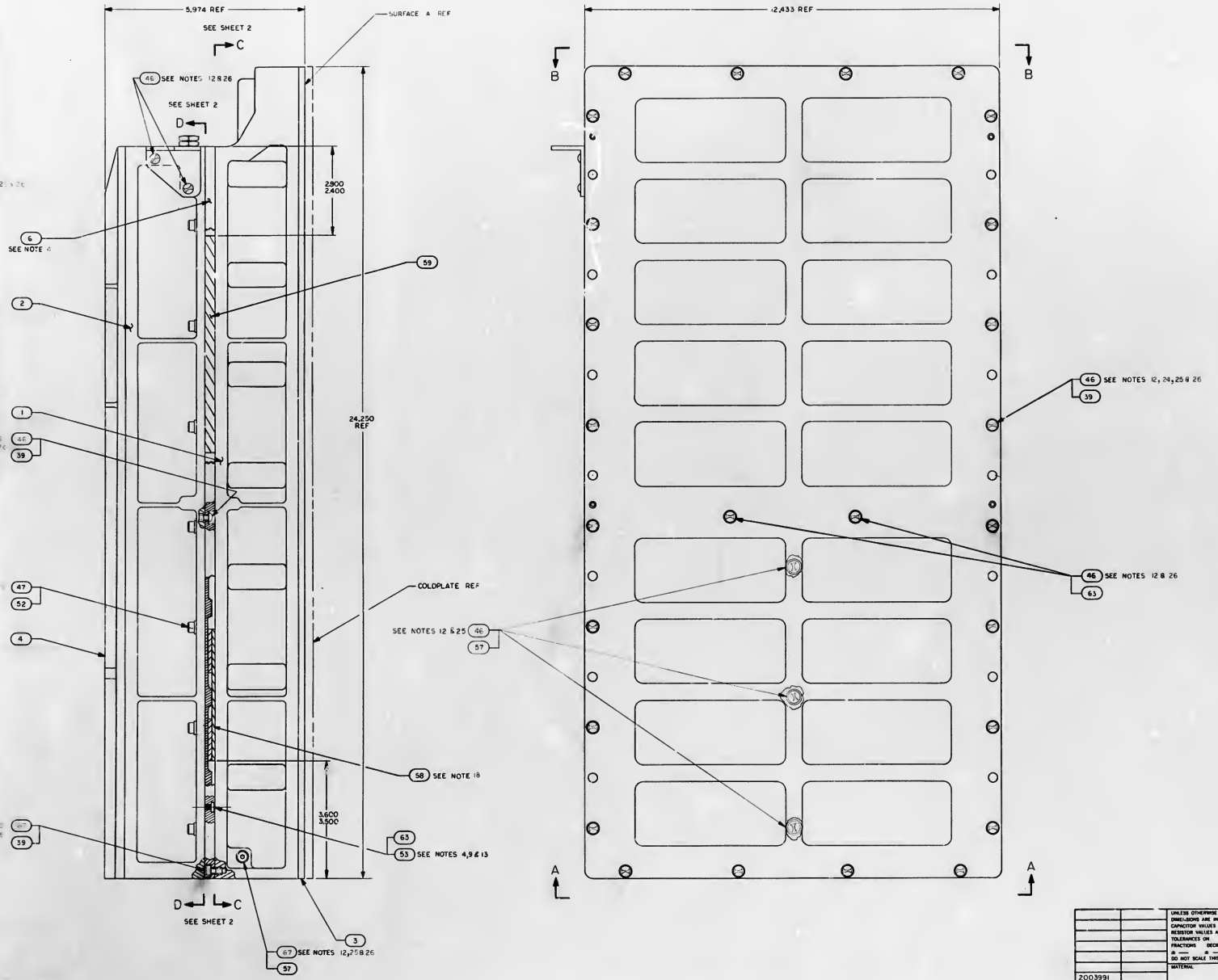

QTY REQD	PART OR IDENTIFYING NO	NOMENCLATURE OR DESCRIPTION	FIGURE NO.
	2005944	AGC WIRE LIST	REF
33	2004732-002	SCREW, COATED	67
AR	1006338-000	SEALING COMPOUND, SILICONE RUBBER	66
AR	1006776-22	INSULATION, SLEEVING ELECTRICAL	65
1	SEE NOTE 20	CAPACITOR	64
10	2004148-007	WASHER, FLAT	63
1	2003981-021	SENSE AMPLIFIER MODULE, FIXED MEMORY B14	62
AR	2004895-002	SHIM AGC	61
AR	2004895-001	SHIM AGC	60
1	2004899-001	PAD VIBRATION	59
1	2003970	VIBRATION PAD ASSY	58
4	NAS598-008N	WASHER, SEALING	57
1	2018773	VALVE PRESSURE ASSEMBLY	56
1	1000159-5	PACKING, PREFORMED "O" RING	55
2	2004964-001	WASHER, FLAT	54
8	2004130	PAD, THREADED	53
18	2004894-014	WASHER, FLAT	52
4	2004894-012	WASHER, FLAT	51
2	1001459-34	SCREW, HEX SOCKET HEAD	50
4	1004722-2	SCREW, CAPTIVE	49
1	1000159-7	PACKING, PREFORMED "O" RING	48
18	2004732-1[illegible]	SCREW, COATED	47
33	2004747-2-001	SCREW, COATED	46
2	1006347	GASKET, PLATE	45
1	2004986	PLUG, MACHINE THREAD	44
1	1004260-19	NAME PLATE, TYPE 2	43
1	2004113-001	BRACKET, CABLE	42
1	2003099-011	CONNECTOR ASSEMBLY	41
1	1006380	GASKET, RETAINED	40
58	2004707	WASHER, KNURLED	39
3	2003067-041	INTERFACE MODULE A27-29	38
2	2003070-031	INTERFACE MODULE A25-26	37
2	2003887-011	POWER SUPPLY MODULE A30-31	36
1	2003121-231	LOGIC MODULE A24	35
1	2003121-221	LOGIC MODULE A23	34
1	2003121-211	LOGIC MODULE A22	33
1	2003121-191	LOGIC MODULE A21	32
1	2003121-181	LOGIC MODULE A20	31
1	2003121-171	LOGIC MODULE A19	30
1	2003121-161	LOGIC MODULE A18	29
1	2003121-151	LOGIC MODULE A17	28
1	2003121-141	LOGIC MODULE A16	27
1	2003121-131	LOGIC MODULE A15	26
1	2003121-121	LOGIC MODULE A14	25
1	2003121-111	LOGIC MODULE A13	24
1	2003121-091	LOGIC MODULE A12	23
4	2003121-081	LOGIC MODULE AB-11	22
1	2003121-071	LOGIC MODULE A7	21
1	2003121-061	LOGIC MODULE A6	20
1	2003121-051	LOGIC MODULE A5	19
1	2003121-041	LOGIC MODULE A4	18
1	2003121-031	LOGIC MODULE A3	17
1	2003121-021	LOGIC MODULE A2	16
1	2003121-011	LOGIC MODULE A1	15
2	2003140-031	ROPE DRIVER MODULE B16-17	14
1	2003027-031	STRAND SELECT MODULE B15	13
1	2003982-021	SENSE AMPL MOD, ERASABLE MEMORY B13	12
1	2003111-021	ERASABLE MEMORY MODULE B12	11
1	2003026-031	CURRENT SWITCH MODULE B11	10
2	2003114-021	ERASABLE DRIVER MODULE B9-10	9
1	2003983-021	ALARM MODULE B8	8
1	2003036-031	OSCILLATOR MODULE B7	7
1	2003978-001	MID SPACER	6
1	2003059-021	INTERCONNECTION HEADER ASSEMBLY	5
1	2003976-011	TRAY B COVER	4
1	2003977-011	TRAY A COVER	3
1	2003095-011	TRAY B WIRED ASSEMBLY	2
1	2003092-031	TRAY A WIRED ASSEMBLY	1
-011		LIST OF MATERIALS	

UNLESS OTHERWISE SPECIFIED DIMENSIONS ARE IN INCHES
CAPACITOR VALUES ARE IN μf
RESISTOR VALUES ARE IN OHMS
TOLERANCES ON FRACTIONS ± DECIMALS ± AND ∠ ±
DO NOT SCALE THIS DRAWING
MATERIAL —

2003991
NEXT ASSY | USED ON
APPLICATION

MIT INSTRUMENTATION LAB
CAMBRIDGE, MASS

DRAWN R.C. Hawley
CHECKED
APPROVED
APPROVED Vaughan Wall
APPROVED MFG E.C.
APPROVED MSC

MANNED SPACECRAFT CENTER
HOUSTON, TEXAS

COMPUTER ASSEMBLY

CODE IDENT NO 80230 | SIZE J | DRAWING NO. 2003993
SCALE 1/1 | SHEET 1 OF 2

2003993 A

C1	
PART NO.	VALUE UUF
1006777-1	10
-15	150
-18	330
-20	470
-22	680
1006777-23	820
SEE NOTE 21	C
1006777-16	220
1006777-17	270

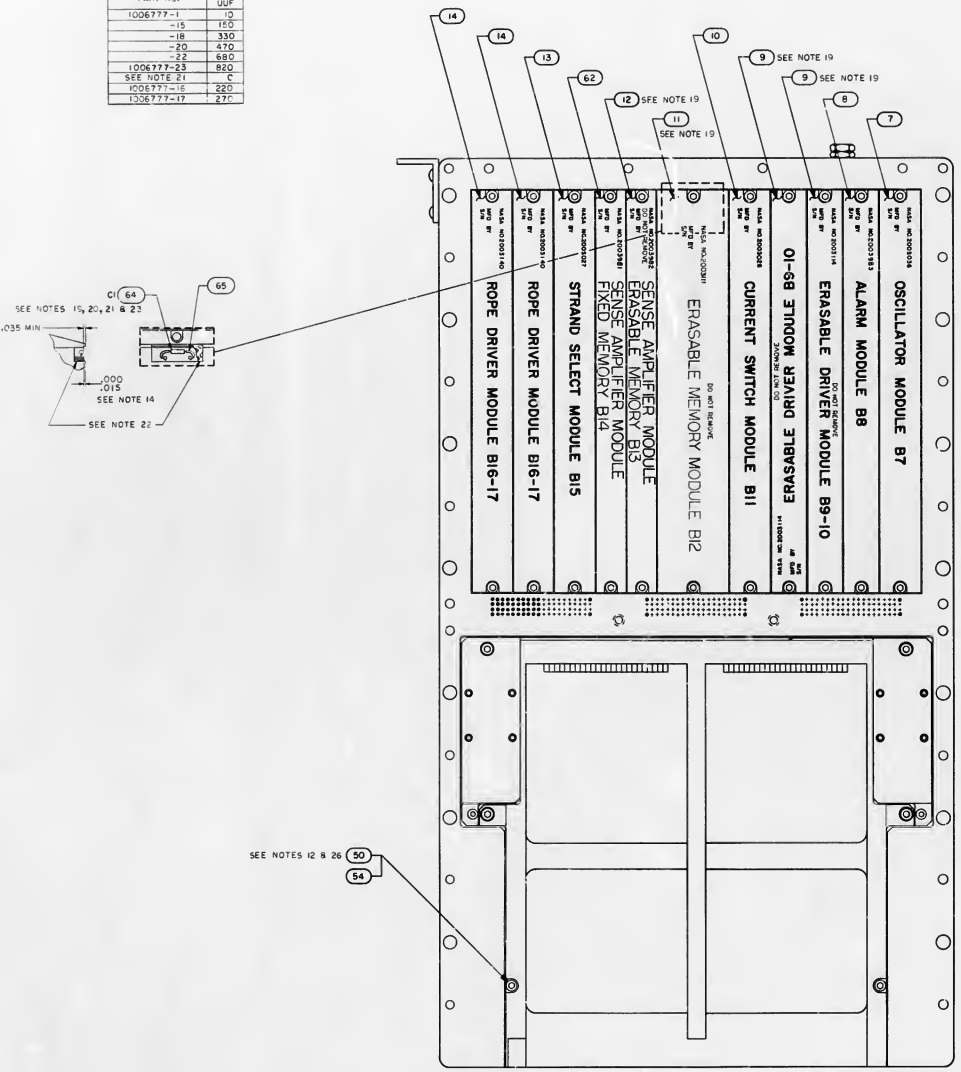

SECTION D-D

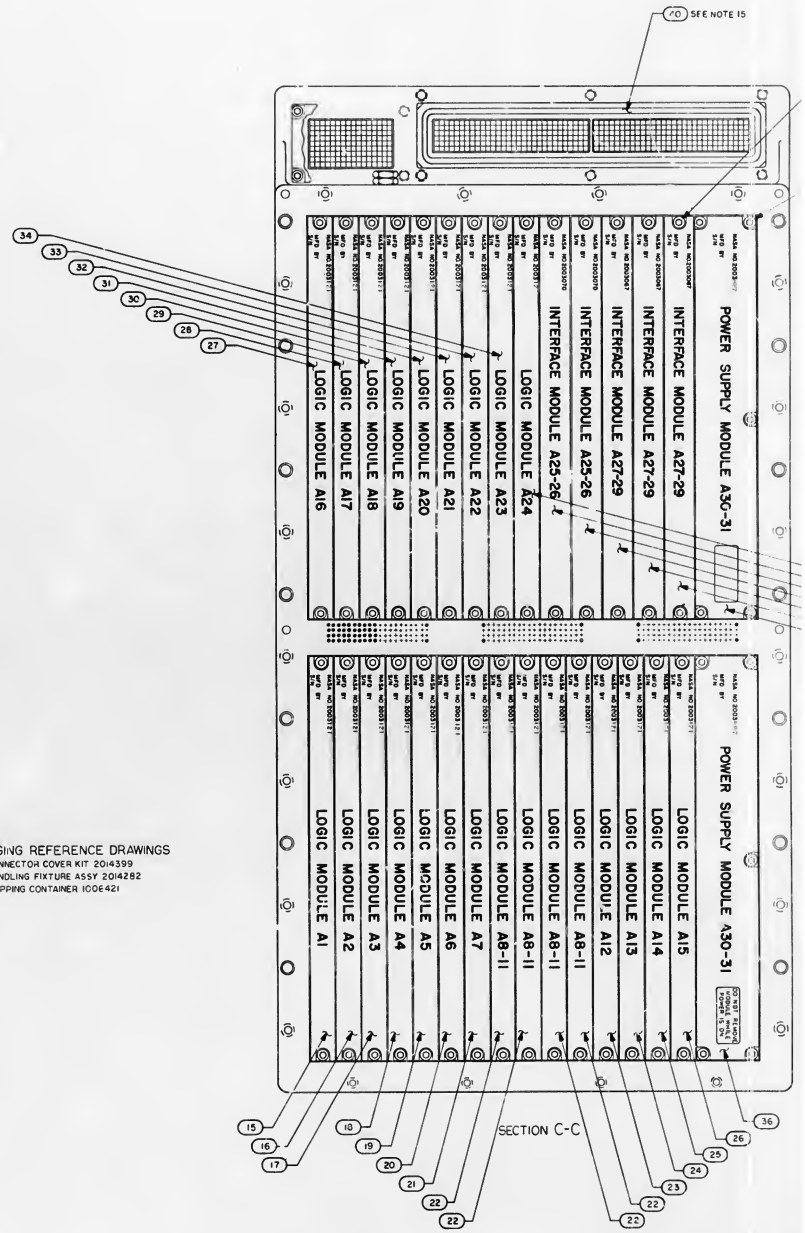

SECTION C-C

PACKAGING REFERENCE DRAWINGS
1. AGC CONNECTOR COVER KIT 2014399
2. AGC HANDLING FIXTURE ASSY 2014282
3. AGC SHIPPING CONTAINER 100E421

2003993 A

REVISIONS						
SYM	ZONE	DESCRIPTION	BY	CHK	DATE	APPROVED
A		INITIAL RELEASE				

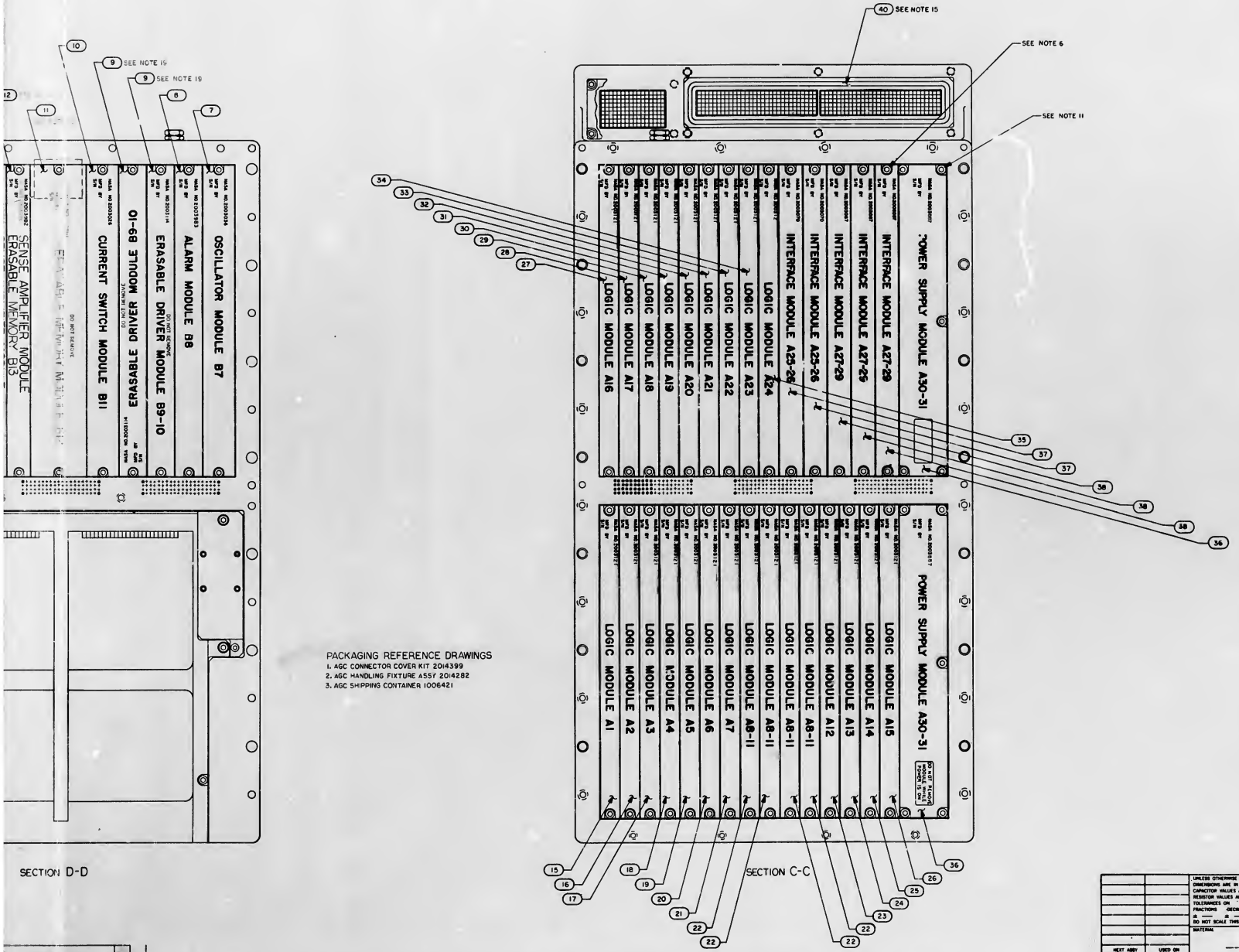

PACKAGING REFERENCE DRAWINGS
1. AGC CONNECTOR COVER KIT 2014399
2. AGC HANDLING FIXTURE ASSY 2014282
3. AGC SHIPPING CONTAINER 1006421

QTY REQD	PART OR IDENTIFYING NO.	NOMENCLATURE OR DESCRIPTION	FIND NO.
		LIST OF MATERIALS	

MIT INSTRUMENTATION LAB CAMBRIDGE MASS	MANNED SPACECRAFT CENTER HOUSTON, TEXAS
DRAWN	
CHECKED	COMPUTER ASSEMBLY
APPROVED	
APPROVED	
APPROVED ENG	CODE IDENT NO. 80230 / SIZE J / DRAWING NO. 2003993
APPROVED SSC	DATE / SCALE 1/1 / SHEET 2 OF 2

UNLESS OTHERWISE SPECIFIED DIMENSIONS ARE IN INCHES CAPACITOR VALUES ARE IN µf RESISTOR VALUES ARE IN OHMS TOLERANCES ON FRACTIONS ±___ DECIMALS ±___ ANGLES ±___ DO NOT SCALE THIS DRAWING

MATERIAL ——

NEXT ASSY | USED ON

APPLICATION

2003993 A

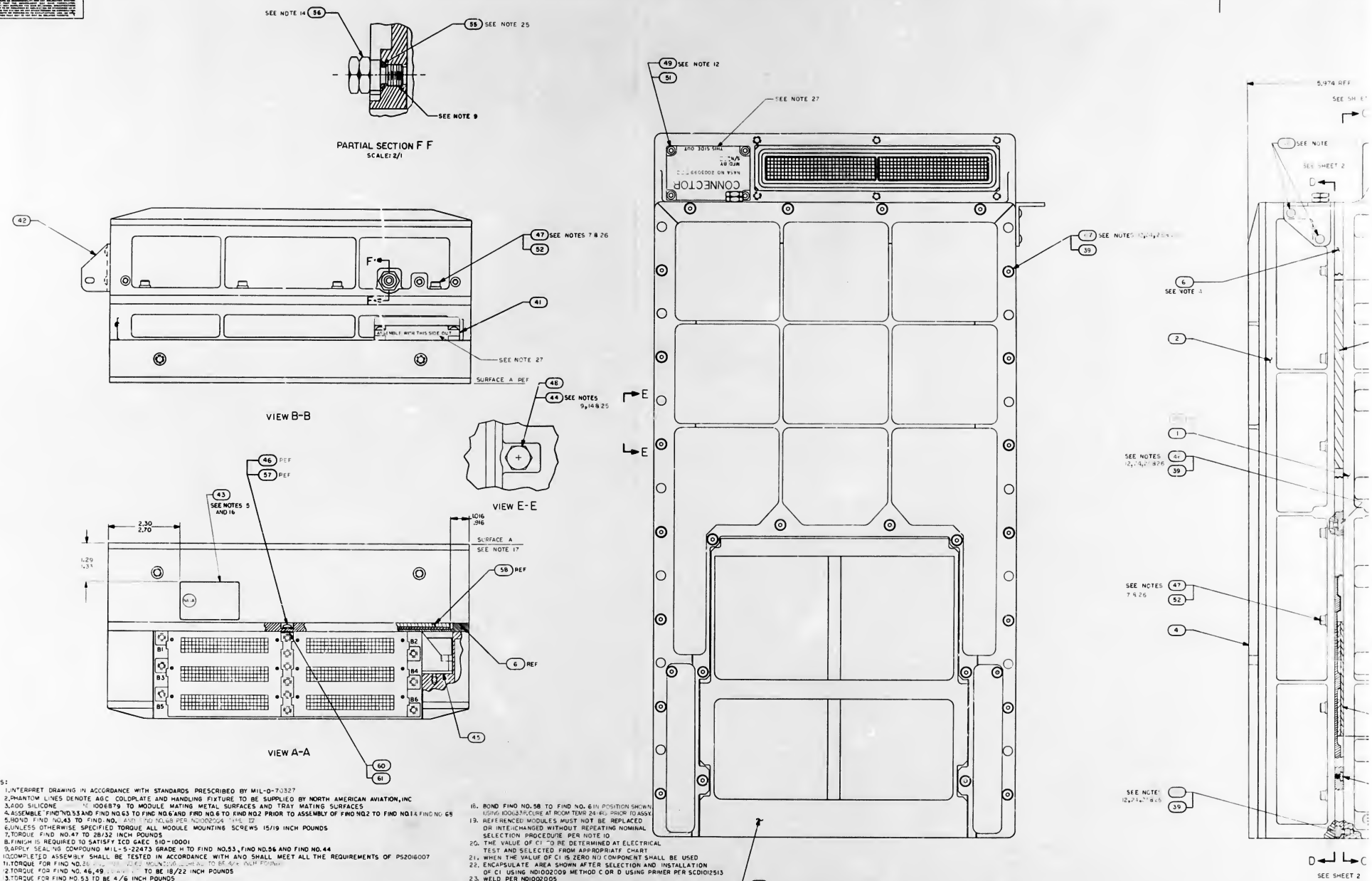

NOTES:

1. INTERPRET DRAWING IN ACCORDANCE WITH STANDARDS PRESCRIBED BY MIL-D-70327
2. PHANTOM LINES DENOTE AGC COLDPLATE AND HANDLING FIXTURE TO BE SUPPLIED BY NORTH AMERICAN AVIATION, INC
3. ADD SILICONE [illegible] 1006879 TO MODULE MATING METAL SURFACES AND TRAY MATING SURFACES
4. ASSEMBLE FIND NO. 53 AND FIND NO. 63 TO FIND NO. 6 AND FIND NO. 6 TO FIND NO. 2 PRIOR TO ASSEMBLY OF FIND NO. 2 TO FIND NO. 1 & FIND NO. 68
5. BOND FIND NO. 43 TO FIND NO. [illegible] PER ND1002004 TYPE II
6. UNLESS OTHERWISE SPECIFIED TORQUE ALL MODULE MOUNTING SCREWS 15/19 INCH POUNDS
7. TORQUE FIND NO. 47 TO 28/32 INCH POUNDS
8. FINISH IS REQUIRED TO SATISFY ICD GAEC 510-10001
9. APPLY SEALING COMPOUND MIL-S-22473 GRADE H TO FIND NO. 53, FIND NO. 56 AND FIND NO. 44
10. COMPLETED ASSEMBLY SHALL BE TESTED IN ACCORDANCE WITH AND SHALL MEET ALL THE REQUIREMENTS OF PS2016007
11. TORQUE FOR FIND NO. 26 [illegible] TO BE [illegible] INCH POUNDS
12. TORQUE FOR FIND NO. 46, 49 [illegible] TO BE 18/22 INCH POUNDS
13. TORQUE FOR FIND NO. 53 TO BE 4/6 INCH POUNDS
14. TORQUE FOR FIND NO. 44 AND FIND NO. 56 TO BE 137/157 INCH POUNDS
15. FIND NO. 40 SHALL BE SUPPLIED AS PART OF THIS ASSEMBLY
16. MARK COMPUTER ASSEMBLY AND RELATED PART NO., APPLICABLE DASH NO., SERIAL NO. AND CONTRACT NO. PER 1004260 AND SERIALIZE PER ND1002023
17. FINISH SURFACE [A-A] PER ICD NAA MH01-01302-116 THIS ASSEMBLY MUST BE CAPABLE OF MEETING ELECTRICAL BONDING REQUIREMENTS OF ICD NAA MH01-01302-116
18. BOND FIND NO. 58 TO FIND NO. 6 IN POSITION SHOWN USING 1006387 & CURE AT ROOM TEMP 24 HRS PRIOR TO ASSY.
19. REFERENCED MODULES MUST NOT BE REPLACED OR INTERCHANGED WITHOUT REPEATING NOMINAL SELECTION PROCEDURE PER NOTE 10
20. THE VALUE OF CI TO BE DETERMINED AT ELECTRICAL TEST AND SELECTED FROM APPROPRIATE CHART
21. WHEN THE VALUE OF CI IS ZERO NO COMPONENT SHALL BE USED
22. ENCAPSULATE AREA SHOWN AFTER SELECTION AND INSTALLATION OF CI USING ND1002009 METHOD C OR D USING PRIMER PER SCDI012513
23. WELD PER ND1002005
24. ASSEMBLE HARDWARE WITH SMOOTH FACE OF FIND NO. 39 IN CONTACT WITH SCREW HEAD
25. FIND NO. 39, 49, 55 & 57 TO BE DISCARDED AND REPLACED WITH NEW PARTS EACH TIME THEY ARE DISASSEMBLED
26. SEAL EXPOSED HARDWARE ASSEMBLIES WITH .002 MIN THICK COATING OF FIND NO. 66. OVERALL COMPUTER ASSEMBLY DIMENSIONS SHALL NOT BE EXCEEDED. CURE AT ROOM TEMP 24 HRS.
27. STENCILING SHOWN FOR ORIENTATION ONLY
28. KEEP ALL MATING THREADS OF SCREWS, TRAY AND MID SPACER INSERTS FREE OF SILICONE COMPOUND.

2003993 B

REVISIONS					
SYM	ZONE	DESCRIPTION	BY	CHK	DATE	APPROVED
A		INITIAL RELEASE 7266 [illegible]			[illegible]
B		REVISED PER TORF 32965			[illegible]

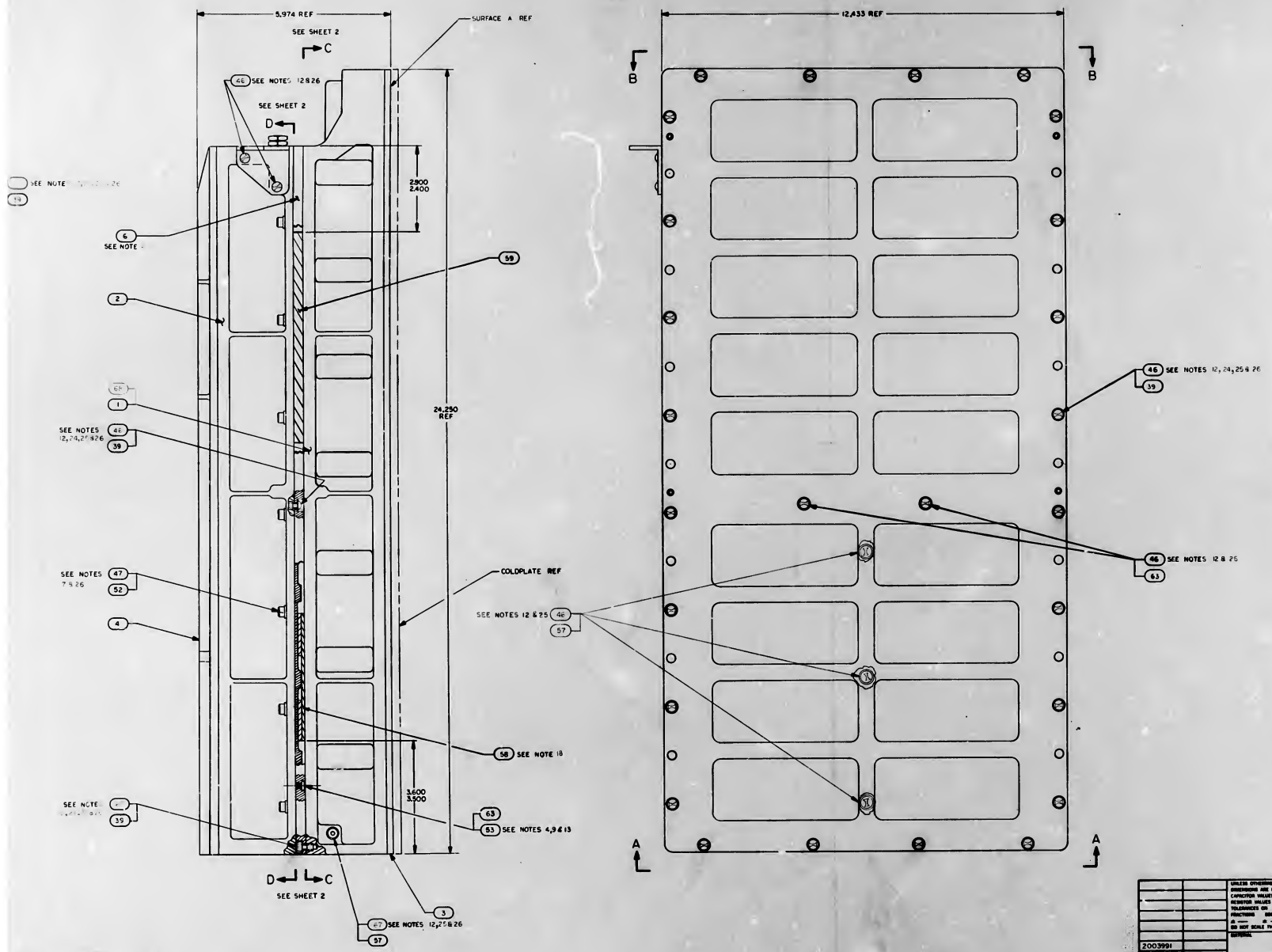

QTY REQD		PART OR IDENTIFYING NO	NOMENCLATURE OR DESCRIPTION	REF DES
		2003944	AGC WIRE LIST	
2	—	2003992-011	POWER SUPPLY MODULE A31-31	69
1	—	2003992-041	TRAY "A" WIRED ASSY	68
33	33	1006432-002	SCREW, GATE	[illegible]
AR	AR	1006336-000	SEALING COMPOUND, SILICON [illegible]	66
AR	AR	1006776-22	INSULATION, SLEEVING ELECTRICAL	65
1	1	SEE NOTE 20	CAPACITOR	64
10	10	2004148-007	WASHER, FLAT	63
1	1	2003981-001	SENSE AMPLIFIER MODULE, FIXED MEMORY B14	62
AR	AR	2004995-002	SHIM AGC	61
AR	AR	2004895-001	SHIM AGC	60
1	1	2004899-001	PAD VIBRATION	59
1	1	2003970	VIBRATION PAD ASSY	58
4	4	NAS1598-008N	WASHER, SEALING	57
1	1	2018773	VALVE PRESSURE ASSEMBLY	56
1	1	1000159-5	PACKING, PREFORMED "O" RING	55
2	2	2004984-001	WASHER, FLAT	54
8	8	2004130	PAD, THREADED	53
18	18	2004894-014	WASHER, FLAT	52
4	4	2004894-012	WASHER, FLAT	51
2	2	1001409-34	SCREW, HEX SOCKET HEAD	50
4	4	1004722-2	SCREW, CAPTIVE	49
1	1	1000159-7	PACKING, PREFORMED "O" RING	48
18	18	[illegible]	SCREW, GATE	47
33	33	1004722-[illegible]	SCREW, GATE	46
2	2	1006347	GASKET, PLATE	45
1	1	2004986	PLUG, MACHINE THREAD	44
1	1	1004260-19	NAME PLATE, TYPE 2	43
1	1	2004113-001	BRACKET, CABLE	42
1	1	2003099-011	CONNECTOR ASSEMBLY	41
1	1	1006380	GASKET, RETAINED	40
58	58	2004707	WASHER, KNURLED	39
3	3	2003067-041	INTERFACE MODULE A27-29	38
2	2	2003070-031	INTERFACE MODULE A25-26	37
—	2	2003197-011	POWER SUPPLY MODULE A30-31	36
1	1	2003121-231	LOGIC MODULE A24	35
1	1	2003121-221	LOGIC MODULE A23	34
1	1	2003121-211	LOGIC MODULE A22	33
1	1	2003121-191	LOGIC MODULE A21	32
1	1	2003121-181	LOGIC MODULE A20	31
1	1	2003121-171	LOGIC MODULE A19	30
1	1	2003121-161	LOGIC MODULE A18	29
1	1	2003121-151	LOGIC MODULE A17	28
1	1	2003121-141	LOGIC MODULE A16	27
1	1	2003121-131	LOGIC MODULE A15	26
1	1	2003121-121	LOGIC MODULE A14	25
1	1	2003121-111	LOGIC MODULE A13	24
1	1	2003121-091	LOGIC MODULE A12	23
4	4	2003121-081	LOGIC MODULE A8-11	22
1	1	2003121-071	LOGIC MODULE A7	21
1	1	2003121-061	LOGIC MODULE A6	20
1	1	2003121-051	LOGIC MODULE A5	19
1	1	2003121-041	LOGIC MODULE A4	18
1	1	2003121-031	LOGIC MODULE A3	17
1	1	2003121-021	LOGIC MODULE A2	16
1	1	2003121-011	LOGIC MODULE A1	15
2	2	2003140-031	ROPE DRIVER MODULE B16-17	14
1	1	2003027-031	STRAND SELECT MODULE B15	13
1	1	2003862-021	SENSE AMPL MOD, ERASABLE MEMORY B13	12
1	1	2003111-021	ERASABLE MEMORY MODULE B12	11
1	1	2003026-031	CURRENT SWITCH MODULE B11	10
2	2	2003114-021	ERASABLE DRIVER MODULE B9-10	9
1	1	2003883-021	ALARM MODULE B8	8
1	1	2003036-031	OSCILLATOR MODULE B7	7
1	1	2003978-031	MID SPACER	6
1	1	2003059-021	INTERCONNECTION HEADER ASSEMBLY	5
1	1	2003976-011	TRAY B COVER	4
1	1	2003977-011	TRAY A COVER	3
1	1	2003093-011	TRAY B WIRED ASSEMBLY	2
1	1	2003092-031	TRAY A WIRED ASSEMBLY	1

-021 -011 LIST OF MATERIALS

UNLESS OTHERWISE SPECIFIED DIMENSIONS ARE IN INCHES CAPACITOR VALUES ARE IN μf RESISTOR VALUES ARE IN OHMS TOLERANCES ON FRACTIONS ± DECIMALS ± ANGLES ± DO NOT SCALE THIS DRAWING

2003991 NEXT ASSY USED ON APPLICATION

MIT INSTRUMENTATION LAB CAMBRIDGE MASS

MANNED SPACECRAFT CENTER HOUSTON TEXAS

COMPUTER ASSEMBLY

CODE IDENT NO 80230 SIZE J DRAWING NO 2003993

SCALE 1/1 SHEET 1 OF 2

2003993 B

C1	
PART NO.	VALUE UUF
1006777-1	10
-15	150
-18	330
-20	470
-22	680
1006777-23	820
SEE NOTE 21	0
1006777-16	220
1006777-17	270

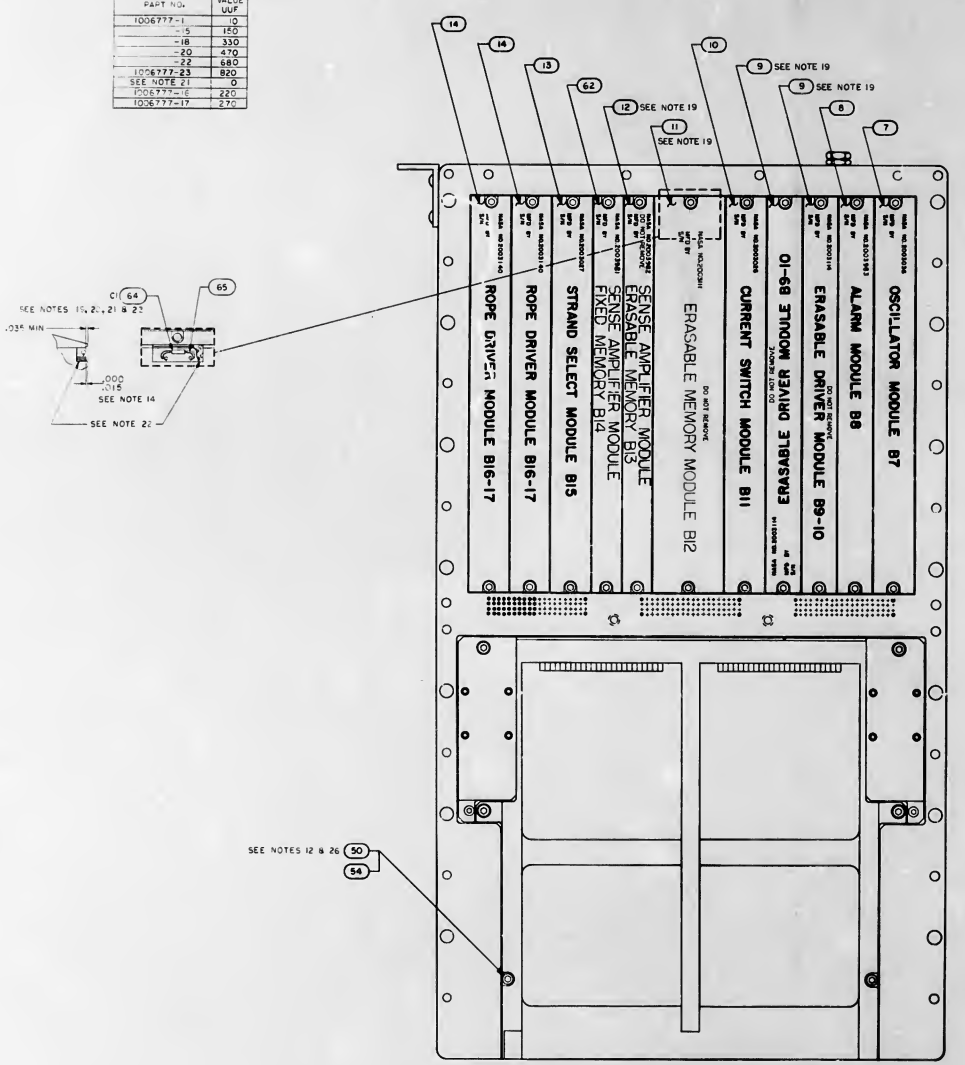

SECTION D-D

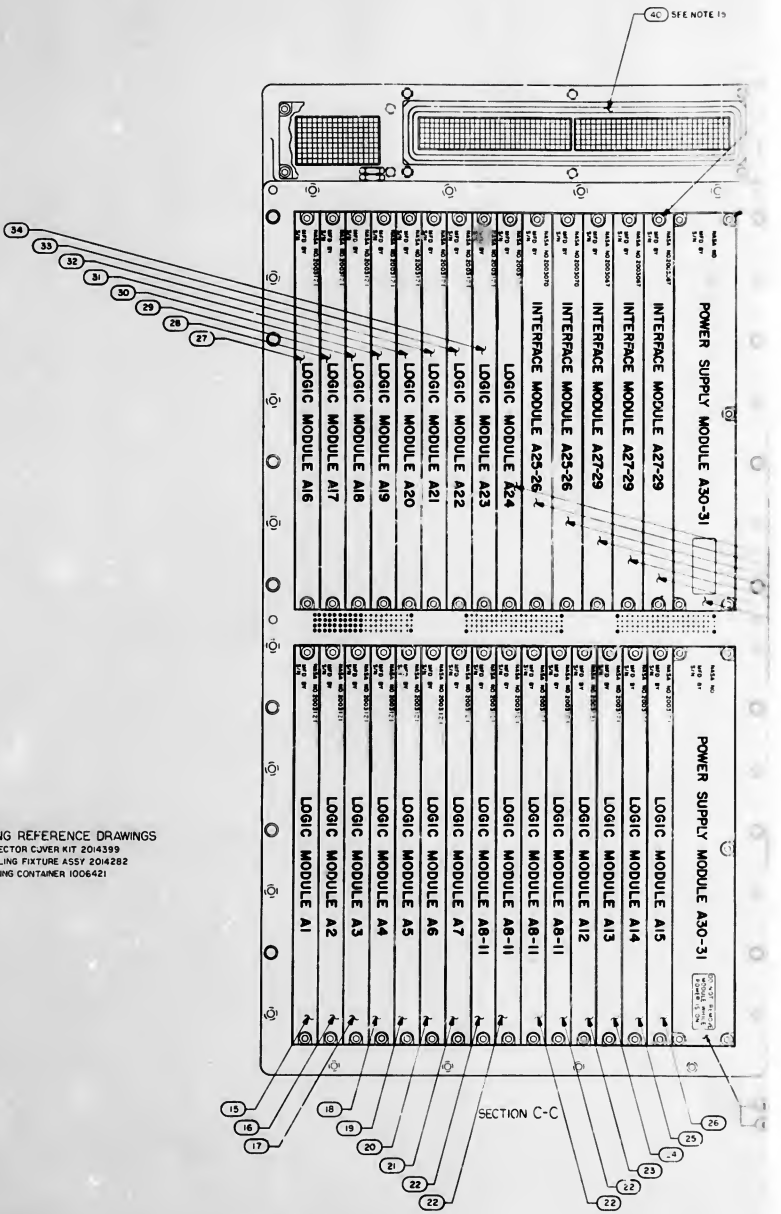

SECTION C-C

PACKAGING REFERENCE DRAWINGS
1. AGC CONNECTOR COVER KIT 2014399
2. AGC HANDLING FIXTURE ASSY 2014282
3. AGC SHIPPING CONTAINER 1006421

REVISIONS					
REV	ZONE	DESCRIPTION	BY	CHK	DATE	APPROVED
A		INITIAL RELEASE TOMA32268				
B		RELEASED PER TOMA 32965				

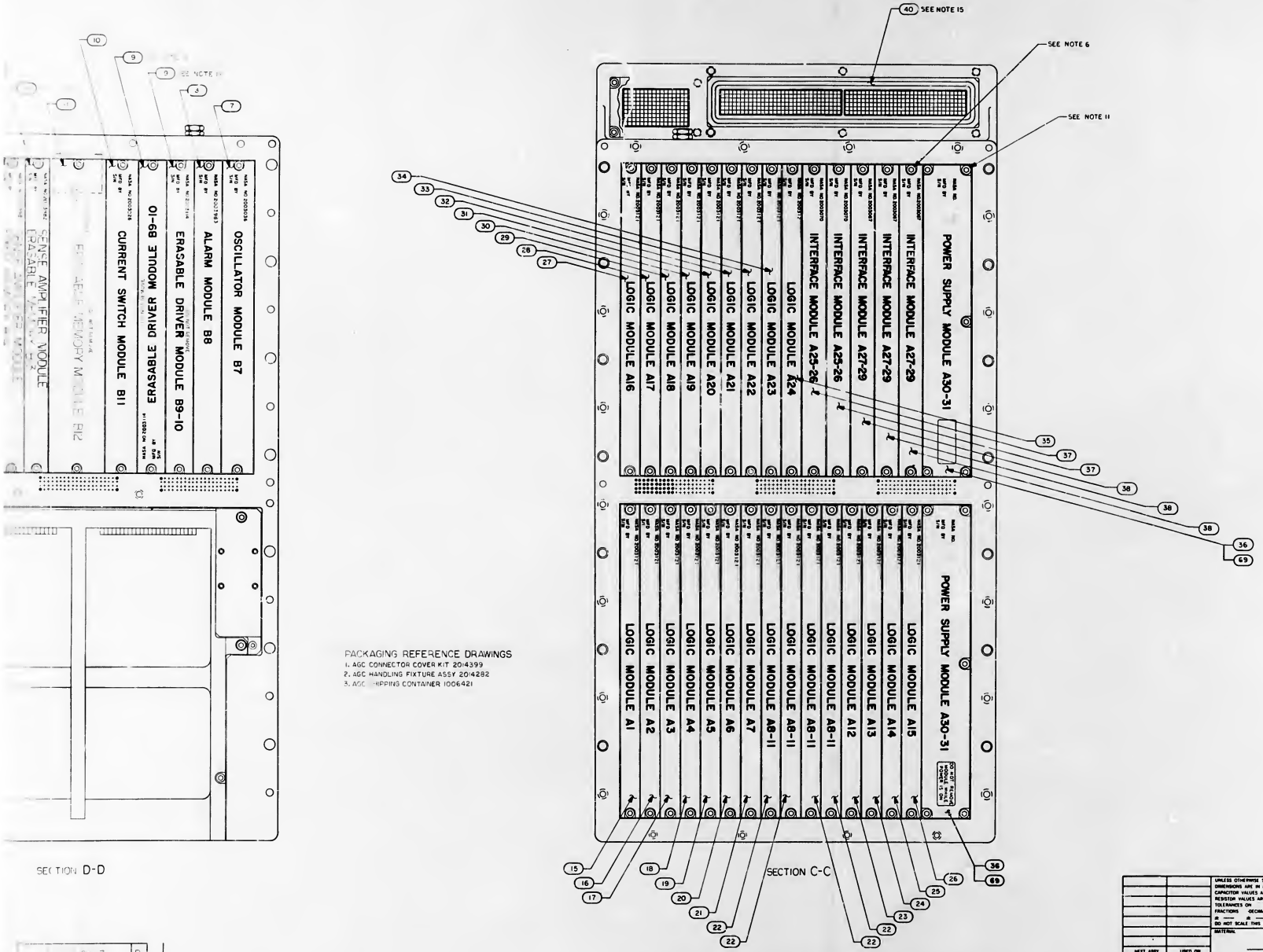

PACKAGING REFERENCE DRAWINGS
1. AGC CONNECTOR COVER KIT 2014399
2. AGC HANDLING FIXTURE ASSY 2014282
3. AGC SHIPPING CONTAINER 1006421

QTY REQD	PART OR IDENTIFYING NO	NOMENCLATURE OR DESCRIPTION	FIND NO
		LIST OF MATERIALS	

UNLESS OTHERWISE SPECIFIED DIMENSIONS ARE IN INCHES
CAPACITOR VALUES ARE IN μf
RESISTOR VALUES ARE IN OHMS
TOLERANCES ON
FRACTIONS ±DECIMALS ANGLES
± ± ±
DO NOT SCALE THIS DRAWING
MATERIAL

NEXT ASSY | USED ON
APPLICATION

MIT INSTRUMENTATION LAB CAMBRIDGE, MASS

MANNED SPACECRAFT CENTER HOUSTON, TEXAS

DRAWN
CHECKED
APPROVED
APPROVED
APPROVED
APPROVED

COMPUTER ASSEMBLY

CODE IDENT NO 80230 | SIZE J | DRAWING NO 2003993

SCALE 1/1 | SHEET 2 OF 2

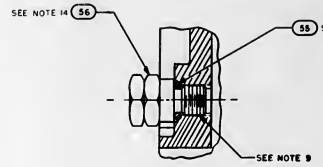

PARTIAL SECTION F F
SCALE: 2/1

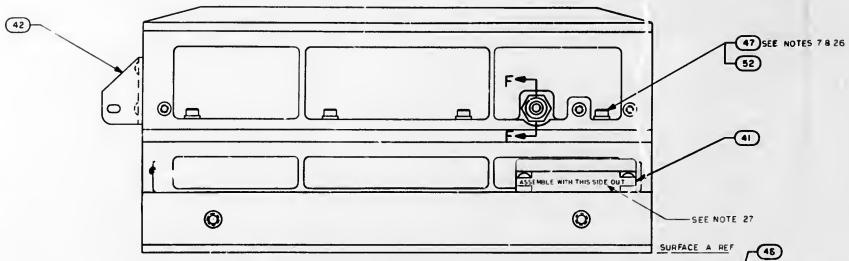

VIEW B-B

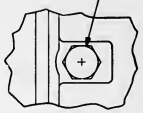

VIEW E-E

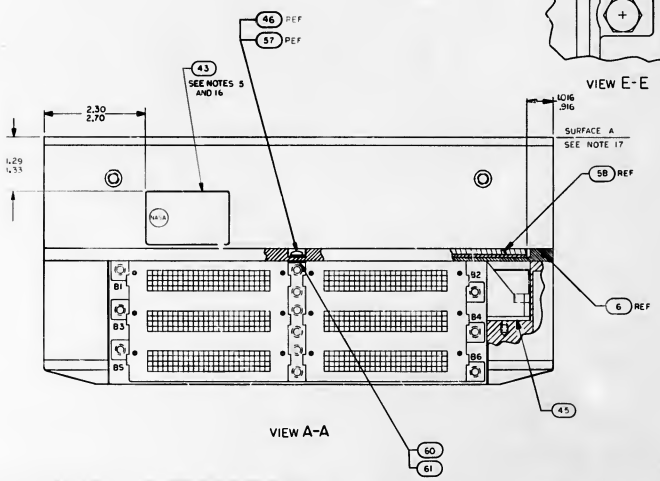

VIEW A-A

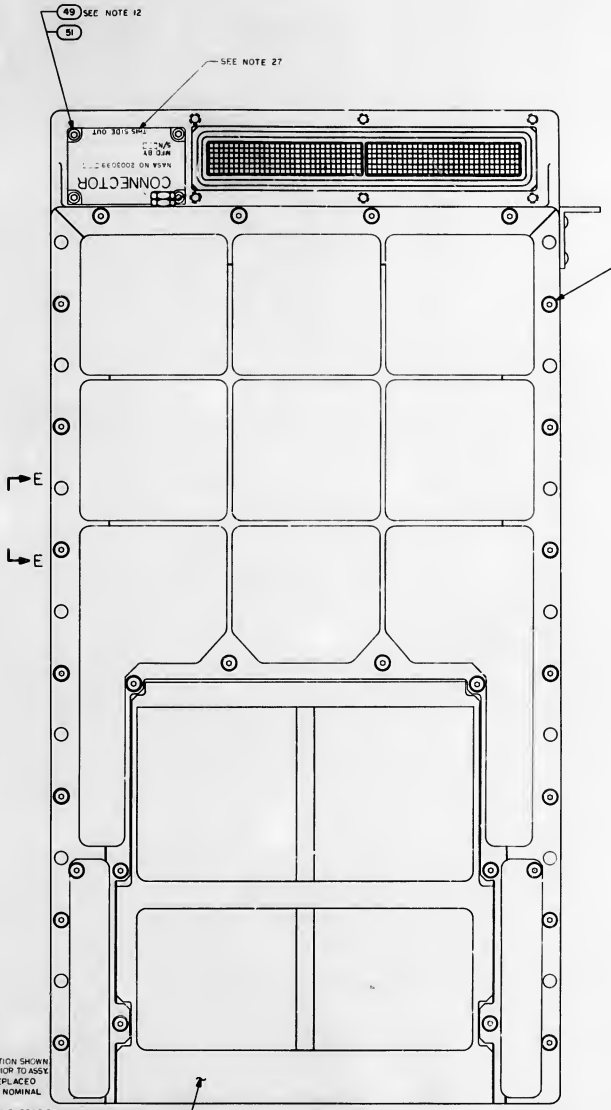

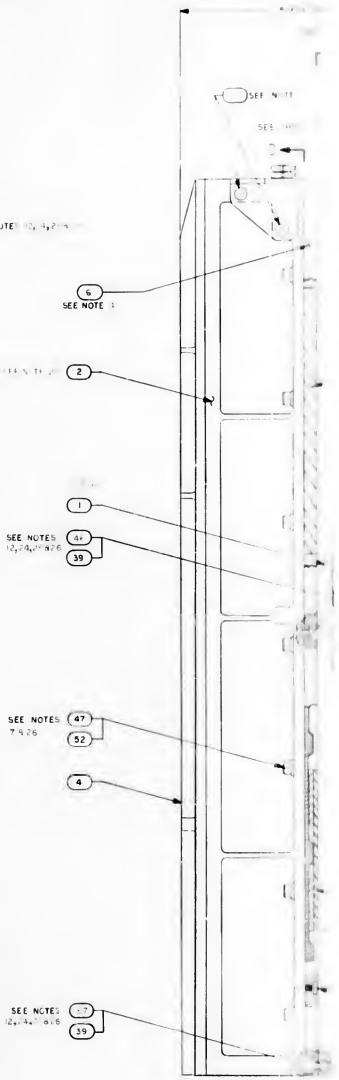

NOTES:

1. INTERPRET DRAWING IN ACCORDANCE WITH STANDARDS PRESCRIBED BY MIL-D-70327
2. PHANTOM LINES DENOTE AGC COLDPLATE AND HANDLING FIXTURE TO BE SUPPLIED BY NORTH AMERICAN AVIATION, INC
3. ADD SILICONE COMPOUND NO. 1006379 TO MODULE MATING METAL SURFACES AND TRAY MATING SURFACES
4. ASSEMBLE FIND NO. 53 AND FIND NO. 63 TO FIND NO. 6 AND FIND NO. 6 TO FIND NO. 2 PRIOR TO ASSEMBLY OF FIND NO. 2 TO FIND NO. 1 & FIND NO. 68
5. BOND FIND NO. 43 TO FIND NO. AND FIND NO. 68 PER ND1002004 TYPE IV
6. UNLESS OTHERWISE SPECIFIED TORQUE ALL MODULE MOUNTING SCREWS 15/19 INCH POUNDS
7. TORQUE FIND NO. 47 TO 28/32 INCH POUNDS
8. FINISH IS REQUIRED TO SATISFY ICD GAEC 510-10001
9. APPLY SEALING COMPOUND MIL-S-22473 GRADE H TO FIND NO. 53, FIND NO. 56 AND FIND NO. 44
10. COMPLETED ASSEMBLY SHALL BE TESTED IN ACCORDANCE WITH AND SHALL MEET ALL THE REQUIREMENTS OF PS2016007
11. TORQUE FOR FIND NO. 26 AND FIND NO. 63 MOUNTING SCREWS TO BE 4/6 INCH POUNDS
12. TORQUE FOR FIND NO. 46, 49 AND 51 TO BE 18/22 INCH POUNDS
13. TORQUE FOR FIND NO. 53 TO BE 4/6 INCH POUNDS
14. TORQUE FOR FIND NO. 44 AND FIND NO. 56 TO BE 137/157 INCH POUNDS
15. FIND NO. 40 SHALL BE SUPPLIED AS PART OF THIS ASSEMBLY
16. MARK COMPUTER ASSEMBLY AND RELATED PART NO., APPLICABLE DASH NO., SERIAL NO. AND CONTRACT NO. PER 1004260 AND SERIALIZE PER ND1002023
17. FINISH SURFACE [A-1] PER ICD NAA MH01-01302-116 THIS ASSEMBLY MUST BE CAPABLE OF MEETING ELECTRICAL BONDING REQUIREMENTS OF ICD NAA MH01-01302-116
16. BOND FIND NO. 58 TO FIND NO. 6 IN POSITION SHOWN USING 1006336, CURE AT ROOM TEMP 24 HRS. PRIOR TO ASSY.
19. REFERENCED MODULES MUST NOT BE REPLACED OR INTERCHANGED WITHOUT REPEATING NOMINAL SELECTION PROCEDURE PER NOTE 10
20. THE VALUE OF C1 TO BE DETERMINED AT ELECTRICAL TEST AND SELECTED FROM APPROPRIATE CHART
21. WHEN THE VALUE OF C1 IS ZERO NO COMPONENT SHALL BE USED
22. ENCAPSULATE AREA SHOWN AFTER SELECTION AND INSTALLATION OF C1 USING ND1002009 METHOD C OR D USING PRIMER PER SCDI012513
23. WELD PER ND1002005
24. ASSEMBLE HARDWARE WITH SMOOTH FACE OF FIND NO. 39 IN CONTACT WITH SCREW HEAD
25. FIND NO. 39, 48, 55 & 57 TO BE DISCARDED AND REPLACED WITH NEW PARTS EACH TIME THEY ARE DISASSEMBLED
26. SEAL EXPOSED HARDWARE ASSEMBLIES WITH .002 MIN THICK COATING OF FIND NO. 66. OVERALL COMPUTER ASSEMBLY DIMENSIONS SHALL NOT BE EXCEEDED. CURE AT ROOM TEMP 24 HRS.
27. STENCILING SHOWN FOR ORIENTATION ONLY
28. KEEP ALL MATING THREADS OF SCREWS, TRAY AND MID SPACER INSERTS FREE OF SILICONE COMPOUND
29. FILL FEMALE INSULATORS OF B41 AND B42 CONNECTORS USING FIND NO. 70 PRIOR TO ASSEMBLY OF FIND NOS. TO FIND NO. 2

2003993 C

REVISIONS					
SYM	ZONE	DESCRIPTION	BY	CHK	DATE	APPROVED
A		INITIAL RELEASE TDRR 33668				
B		REVISED PER TDRR 32965				
C		REVISED PER TDRR 3330				

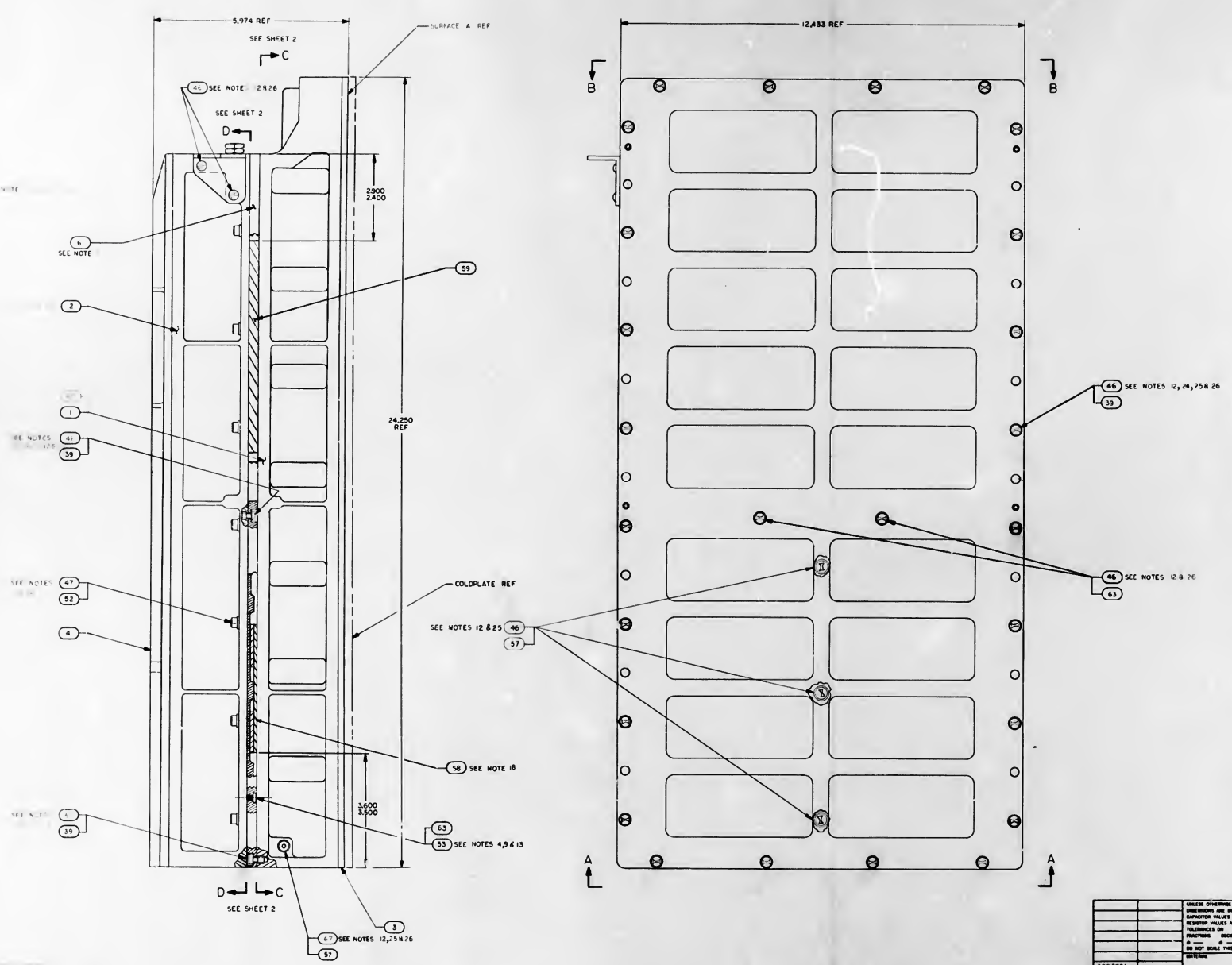

		2003944	AGC W/RE LIST	71
AR	AR	MIL-S-8660	SILICONE COMPOUND	70
2	—	2003092-011	POWER SUPPLY MODULE A30-31	69
1	—	2003092-041	TRAY "A" WIRED ASSY	68
33	33	2004752-002	SCREW, COATED	67
AR	AR	1006338-000	SEALING COMPOUND, SILICONE RUBBER	66
AR	AR	1006776-22	INSULATION, SLEEVING ELECTRICAL	65
1	1	SEE NOTE 20	CAPACITOR	64
10	10	2004148-007	WASHER, FLAT	63
1	1	2003991-001	SENSE AMPLIFIER MODULE, FIXED MEMORY B14	62
AR	AR	2004895-002	SHIM AGC	61
AR	AR	2004895-001	SHIM AGC	60
1	1	2004899-001	PAD VIBRATION	59
1	1	2003970	VIBRATION PAD ASSY	58
4	4	NAS1598-008N	WASHER, SEALING	57
1	1	2018773	VALVE PRESSURE ASSEMBLY	56
1	1	1000159-3	PACKING, PREFORMED "O" RING	55
2	2	2004984-001	WASHER, FLAT	54
8	8	2004130	PAD, THREADED	53
18	18	2004894-014	WASHER, FLAT	52
4	4	2004894-012	WASHER, FLAT	51
2	2	1001489-36	SCREW, HEX SOCKET HEAD	50
4	4	1004722-2	SCREW, CAPTIVE	49
1	1	1000159-7	PACKING, PREFORMED "O" RING	48
18	18	2004732-003	SCREW, COATED	47
33	33	2004752-001	SCREW, COATED	46
2	2	1006347	GASKET, PLATE	45
1	1	2004986	PLUG, MACHINE THREAD	44
1	1	1004260-19	NAME PLATE, TYPE X	43
1	1	2004113-001	BRACKET, CABLE	42
1	1	2003159-011	CONNECTOR ASSEMBLY	41
1	1	1006380	GASKET, RETAINED	40
58	58	2004707	WASHER, KNURLED	39
3	3	2003067-041	INTERFACE MODULE A27-29	38
2	2	2003070-031	INTERFACE MODULE A25-26	37
—	2	2003087-011	POWER SUPPLY MODULE A30-31	36
1	1	2003121-231	LOGIC MODULE A24	35
1	1	2003121-221	LOGIC MODULE A23	34
1	1	2003121-211	LOGIC MODULE A22	33
1	1	2003121-191	LOGIC MODULE A21	32
1	1	2003121-181	LOGIC MODULE A20	31
1	1	2003121-171	LOGIC MODULE A19	30
1	1	2003121-161	LOGIC MODULE A18	29
1	1	2003121-151	LOGIC MODULE A17	28
1	1	2003121-141	LOGIC MODULE A16	27
1	1	2003121-131	LOGIC MODULE A15	26
1	1	2003121-121	LOGIC MODULE A14	25
1	1	2003121-111	LOGIC MODULE A13	24
1	1	2003121-091	LOGIC MODULE A12	23
4	4	2003121-081	LOGIC MODULE A8-11	22
1	1	2003121-071	LOGIC MODULE A7	21
1	1	2003121-061	LOGIC MODULE A6	20
1	1	2003121-051	LOGIC MODULE A5	19
1	1	2003121-041	LOGIC MODULE A4	18
1	1	2003121-031	LOGIC MODULE A3	17
1	1	2003121-021	LOGIC MODULE A2	16
1	1	2003121-011	LOGIC MODULE A1	15
2	2	2003140-031	ROPE DRIVER MODULE B16-17	14
1	1	2003027-031	STRAND SELECT MODULE B15	13
1	1	2003982-021	SENSE AMPL MOD, ERASABLE MEMORY B13	12
1	1	2003111-021	ERASABLE MEMORY MODULE B12	11
1	1	2003025-031	CURRENT SWITCH MODULE B11	10
2	2	2003114-021	ERASABLE DRIVER MODULE B9-10	9
1	1	2003083-021	ALARM MODULE B8	8
1	1	2003036-031	OSCILLATOR MODULE B7	7
1	1	2003978-001	MID SPACER	6
1	1	2003059-021	INTERCONNECTION HEADER ASSEMBLY	5
1	1	2003976-011	TRAY B COVER	4
1	1	2003977-011	TRAY A COVER	3
1	1	2003093-011	TRAY B WIRED ASSEMBLY	2
—	1	2003092-031	TRAY A WIRED ASSEMBLY	1
QTY REQD	QTY REQD	PART OR IDENTIFYING NO	NOMENCLATURE OR DESCRIPTION	FIND NO
-021	-011		LIST OF MATERIALS	

UNLESS OTHERWISE SPECIFIED DIMENSIONS ARE IN INCHES
CAPACITOR VALUES ARE IN μf
RESISTOR VALUES ARE IN OHMS
TOLERANCES ON
FRACTIONS DECIMALS ANGLES
± — ± — ±
DO NOT SCALE THIS DRAWING
MATERIAL —

2003991
NEXT ASSY USED ON
APPLICATION

MIT INSTRUMENTATION LAB
CAMBRIDGE MASS

DRAWN R.E. Hawks
CHECKED
APPROVED
APPROVED
APPROVED
APPROVED

MANNED SPACECRAFT CENTER
HOUSTON TEXAS

COMPUTER ASSEMBLY

CODE IDENT NO 80230 | SIZE J | DRAWING NO 2003993
SCALE — | SHEET 1 OF 2

C1	
PART NO.	VALUE UUF
1006777-1	10
-15	150
-18	330
-20	470
-22	680
1006777-23	820
SEE NOTE 21	0
1006777-16	220
1006777-17	270

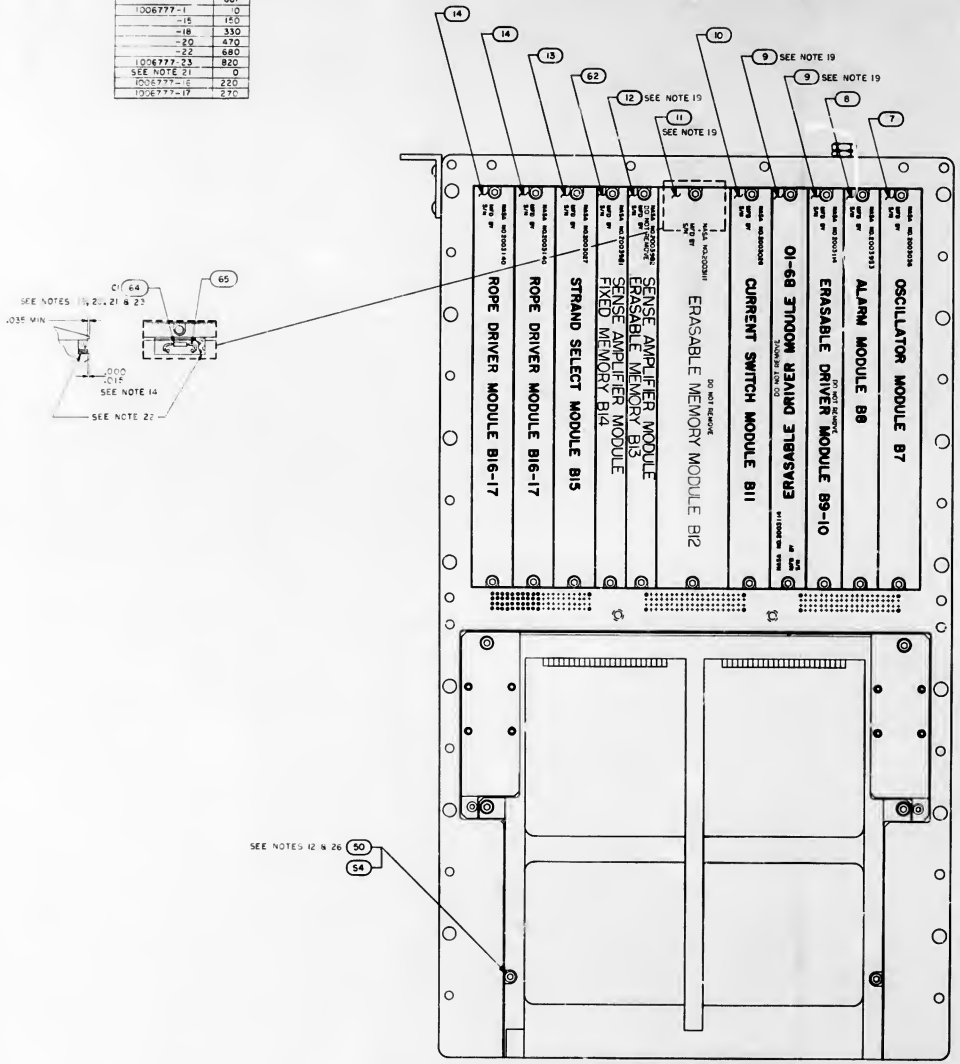

SECTION D-D

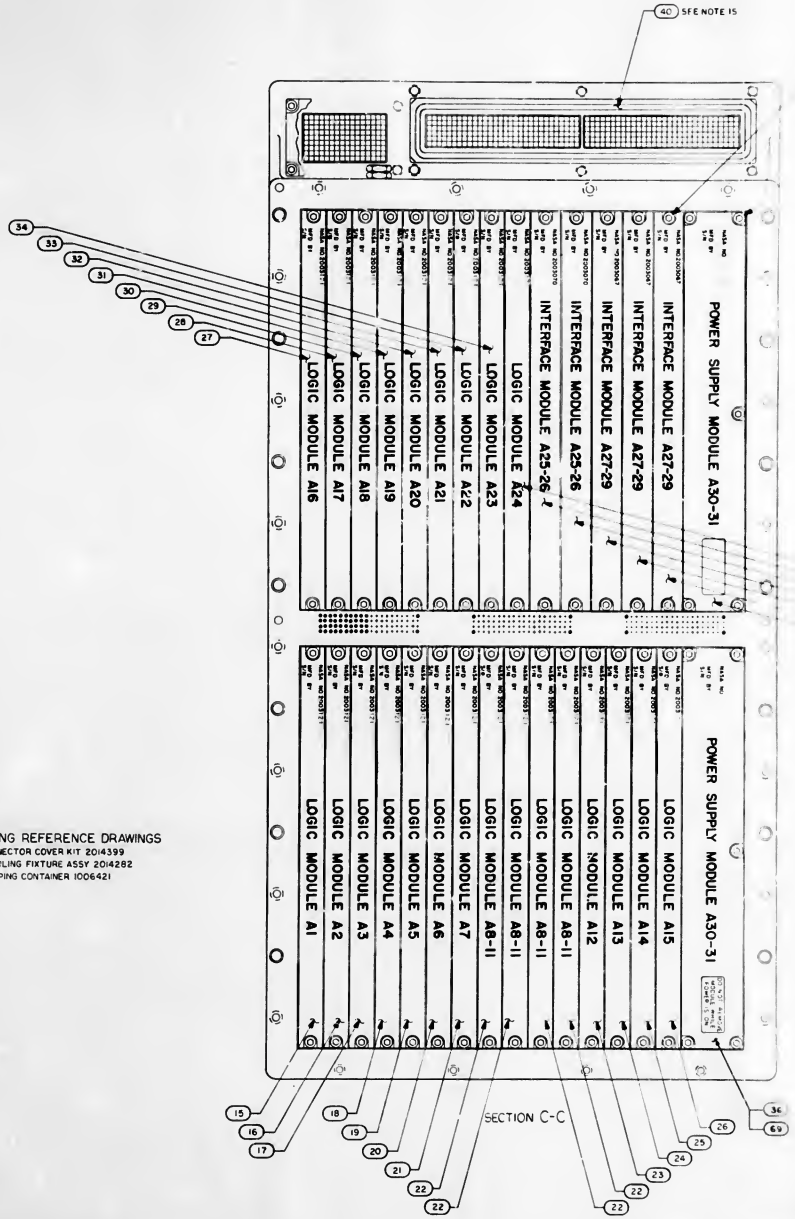

SECTION C-C

PACKAGING REFERENCE DRAWINGS
1. AGC CONNECTOR COVER KIT 2014399
2. AGC HANDLING FIXTURE ASSY 2014282
3. AGC SHIPPING CONTAINER 1006421

REVISIONS					
SYM	ZONE	DESCRIPTION	BY	CHK	DATE	APPROVED
A		INITIAL RELEASE PER TDRR 32568				
B		RELEASED PER TDRR 32962				
C		REVISED PER TDRR 33330				

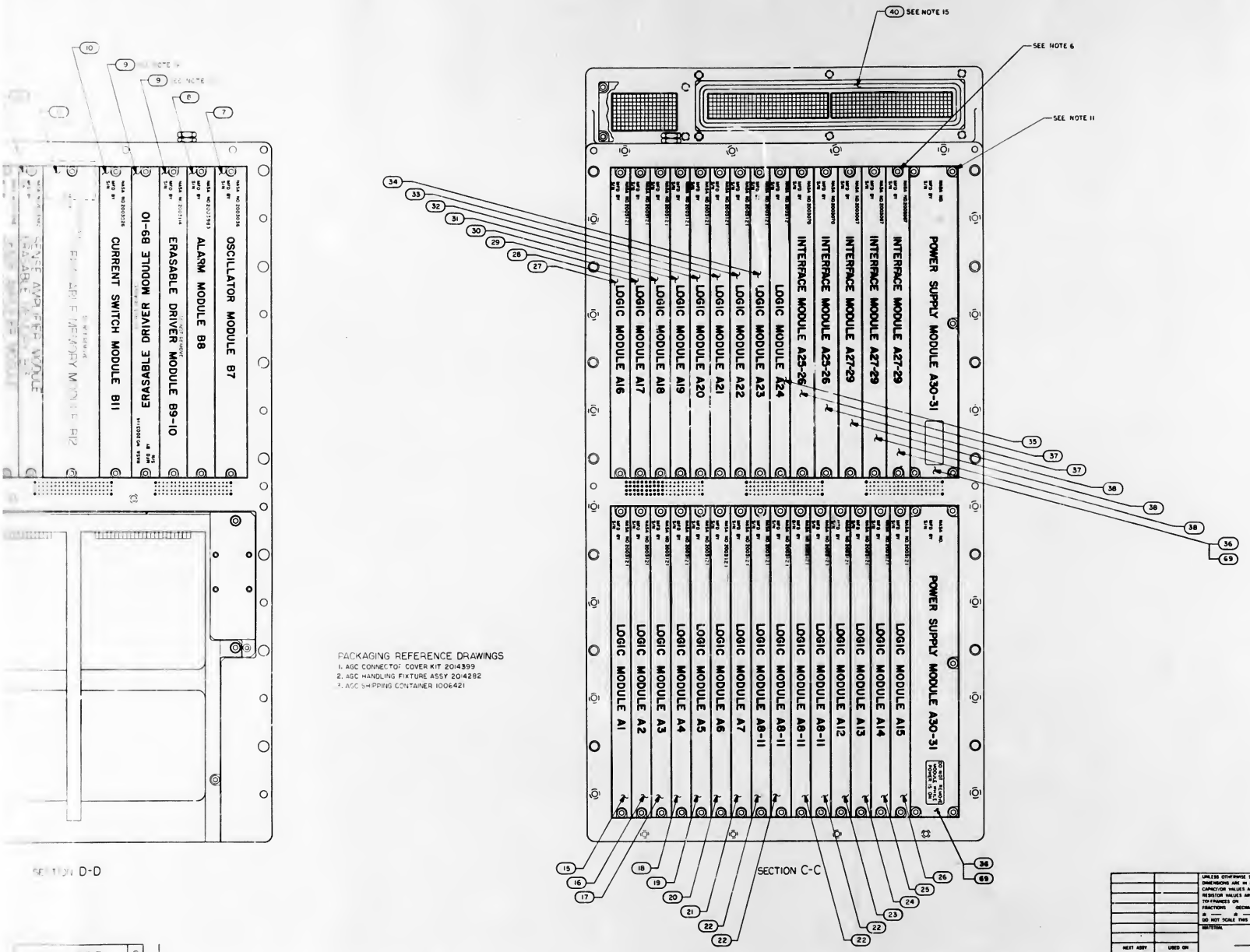

PACKAGING REFERENCE DRAWINGS
1. AGC CONNECTOR COVER KIT 2014399
2. AGC HANDLING FIXTURE ASSY 2014282
3. AGC SHIPPING CONTAINER 1006421

QTY REQD	PART OR IDENTIFYING NO	NOMENCLATURE OR DESCRIPTION	FIND NO
		LIST OF MATERIALS	

UNLESS OTHERWISE SPECIFIED DIMENSIONS ARE IN INCHES, CAPACITOR VALUES ARE IN μf, RESISTOR VALUES ARE IN OHMS TOLERANCES ON FRACTIONS ± ___ DECIMALS ± ___ ANGLES ± ___
DO NOT SCALE THIS DRAWING
MATERIAL ___

NEXT ASSY | USED ON
APPLICATION

MIT INSTRUMENTATION LAB CAMBRIDGE MASS

MANNED SPACECRAFT CENTER HOUSTON TEXAS

DRAWN
CHECKED
APPROVED
APPROVED
APPROVED
APPROVED

COMPUTER ASSEMBLY

CODE IDENT NO 80230 | SIZE J | DRAWING NO 2003993

DATE | SCALE 1/1 | SHEET 2 OF 2

APPLICATION

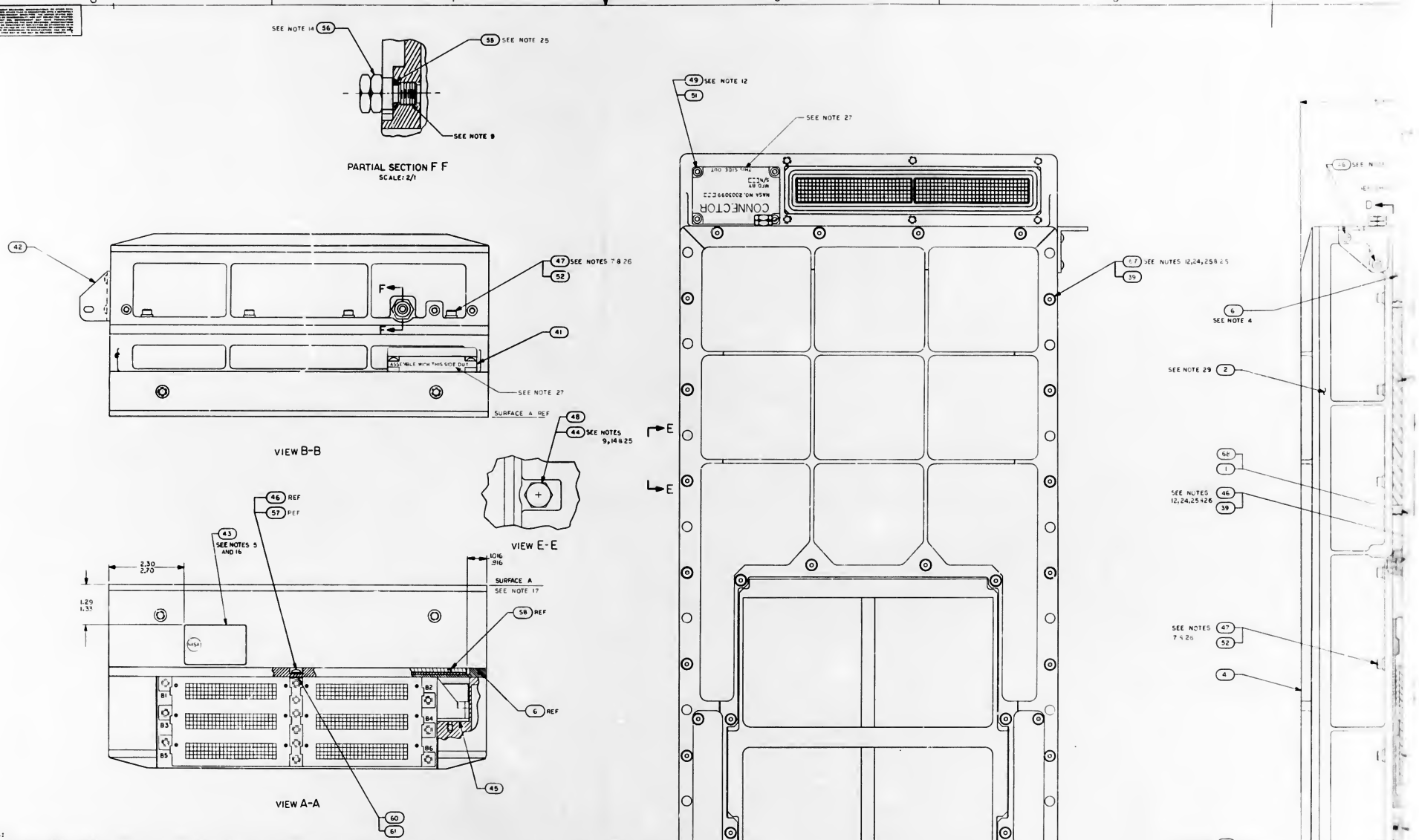

NOTES:

1. INTERPRET DRAWING IN ACCORDANCE WITH STANDARDS PRESCRIBED BY MIL-D-70327
2. PHANTOM LINES DENOTE AGC COLDPLATE AND HANDLING FIXTURE TO BE SUPPLIED BY NORTH AMERICAN AVIATION, INC
3. A00 SILICONE COMPOUND 1006879 TO MODULE MATING METAL SURFACES AND TRAY MATING SURFACES
4. ASSEMBLE FIND NO.53 AND FIND NO.63 TO FIND NO.6 AND FIND NO.6 TO FIND NO.2 PRIOR TO ASSEMBLY OF FIND NO.2 TO FIND NO.1 & FIND NO 68
5. BOND FIND NO.43 TO FIND NO.1 AND FIND NO.68 PER ND1002004 TYPE IV
6. UNLESS OTHERWISE SPECIFIED TORQUE ALL MODULE MOUNTING SCREWS 15/19 INCH POUNDS
7. TORQUE FIND NO.47 TO 28/32 INCH POUNDS
8. FINISH IS REQUIRED TO SATISFY ICD GAEC 510-10001
9. APPLY SEALING COMPOUND MIL-S-22473 GRADE H TO FIND NO.53, FIND NO.56 AND FIND NO.44
10. COMPLETED ASSEMBLY SHALL BE TESTED IN ACCORDANCE WITH AND SHALL MEET ALL THE REQUIREMENTS OF PS2016007
11. TORQUE FOR FIND NO.36 AND FIND NO.69 MOUNTING SCREWS TO BE 4/6 INCH POUNDS
12. TORQUE FOR FIND NO. 46, 49, 50 AND 67 TO BE 18/22 INCH POUNDS
13. TORQUE FOR FIND NO.53 TO BE 4/6 INCH POUNDS
14. TORQUE FOR FIND NO.44 AND FIND NO.56 TO BE 137/157 INCH POUNDS
15. FIND NO.40 SHALL BE SUPPLIED AS PART OF THIS ASSEMBLY
16. MARK COMPUTER ASSEMBLY AND RELATED PART NO., APPLICABLE DASH NO., SERIAL NO. AND CONTRACT NO. PER 1004260 AND SERIALIZE PER ND1002023
17. FINISH SURFACE A PER ICD NAA MH01-01302-116 THIS ASSEMBLY MUST BE CAPABLE OF MEETING ELECTRICAL BONDING REQUIREMENTS OF ICD NAA MH01-01302-116
18. BOND FIND NO.58 TO FIND NO. 6 IN POSITION SHOWN USING 1006336, CURE AT ROOM TEMP 24 HRS PRIOR TO ASSY.
19. REFERENCED MODULES MUST NOT BE REPLACED OR INTERCHANGED WITHOUT REPEATING NOMINAL SELECTION PROCEDURE PER NOTE 10
20. THE VALUE OF CI TO BE DETERMINED AT ELECTRICAL TEST AND SELECTED FROM APPROPRIATE CHART
21. WHEN THE VALUE OF CI IS ZERO NO COMPONENT SHALL BE USED
22. ENCAPSULATE AREA SHOWN AFTER SELECTION AND INSTALLATION OF CI USING ND1002009 METHOD C OR D USING PRIMER PER SCD1012513
23. WELD PER ND1002005
24. ASSEMBLE HARDWARE WITH SMOOTH FACE OF FIND NO. 39 IN CONTACT WITH SCREW HEAD
25. FIND NO.39, 49, 55 & 57 TO BE DISCARDED AND REPLACED WITH NEW PARTS EACH TIME THEY ARE DISASSEMBLED
26. SEAL EXPOSED HARDWARE ASSEMBLIES WITH .002 MIN THICK COATING OF FIND NO.66. OVERALL COMPUTER ASSEMBLY DIMENSIONS SHALL NOT BE EXCEEDED. CURE AT ROOM TEMP 24 HRS.
27. STENCILING SHOWN FOR ORIENTATION ONLY
28. KEEP ALL MATING THREADS OF SCREWS, TRAY AND MID SPACER INSERTS FREE OF SILICONE COMPOUND
29. FILL FEMALE INSULATORS OF 841 AND 842 CONNECTORS USING FIND NO.70 PRIOR TO ASSEMBLY OF FIND NO.5 TO FIND NO.2

REVISIONS						
SYM	ZONE	DESCRIPTION	BY	CHK	DATE	APPROVED
A		INITIAL RELEASE PER ECO [illegible]	[illegible]		[illegible]	[illegible]
B		REVISED PER TURR 32965	[illegible]		[illegible]	[illegible]
C		REVISED PER TURR 33[illegible]	[illegible]		[illegible]	[illegible]
D		REVISED PER TURR 3[illegible]	[illegible]		[illegible]	[illegible]

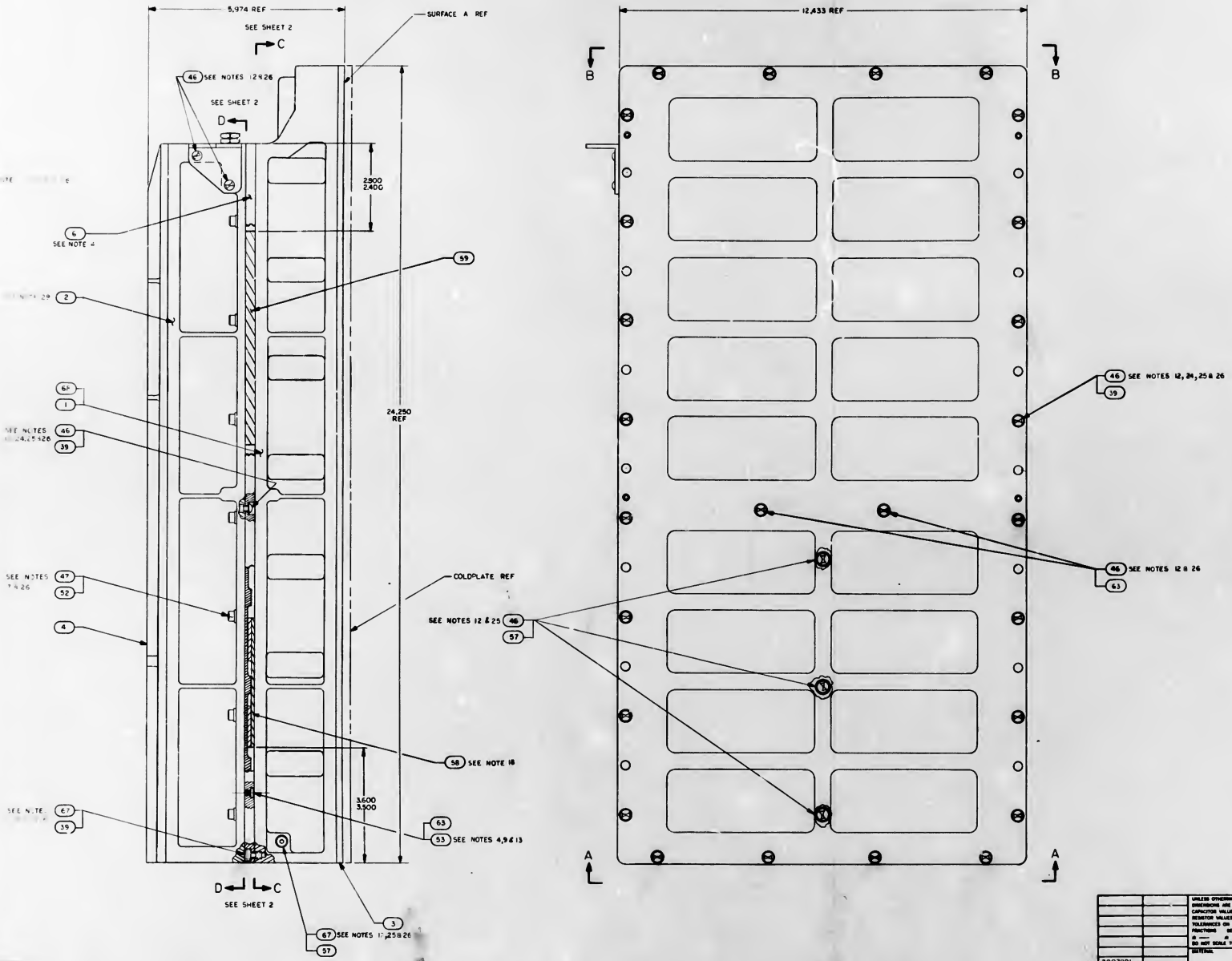

		2005944	AGC WIRE LIST	REF
AR	AR	MIL-S-8660	SILICONE COMPOUND	70
2	—	2003892-011	POWER SUPPLY MODULE A30-31	69
1	—	2003092-041	TRAY "A" WIRED ASSY	68
33	33	2004732-002	SCREW, COATED	67
AR	AR	1006338-000	SEALING COMPOUND, SILICONE RUBBER	66
AR	AR	1006776-22	INSULATION, SLEEVING ELECTRICAL	65
1	1	SEE NOTE 20	CAPACITOR	64
10	10	2004148-007	WASHER, FLAT	63
1	1	2003981-021	SENSE AMPLIFIER MODULE, FIXED MEMORY B14	62
AR	AR	2004895-002	SHIM AGC	61
AR	AR	2004895-001	SHIM AGC	60
1	1	2004899-001	PAD VIBRATION	59
1	1	2003970	VIBRATION PAD ASSY	58
4	4	NAS1598-008N	WASHER, SEALING	57
1	1	2018773	VALVE PRESSURE ASSEMBLY	56
1	1	1000159-5	PACKING, PREFORMED "O" RING	55
2	2	2004984-001	WASHER, FLAT	54
8	8	2004130	PAD, THREADED	53
18	18	2004894-014	WASHER, FLAT	52
4	4	2004894-012	WASHER, FLAT	51
2	2	1001489-36	SCREW, HEX SOCKET HEAD	50
4	4	1004722-2	SCREW, CAPTIVE	49
1	1	1000159-7	PACKING, PREFORMED "O" RING	48
18	18	2004732-003	SCREW, COATED	47
33	33	2004732-001	SCREW, COATED	46
2	2	1006347	GASKET, PLATE	45
1	1	2004986	PLUG, MACHINE THREAD	44
1	1	1004260-19	NAME PLATE, TYPE I	43
1	1	2004113-001	BRACKET, CABLE	42
1	1	2003089-011	CONNECTOR ASSEMBLY	41
1	1	1006380	GASKET, RETAINED	40
58	58	2004707	WASHER, KNURLED	39
3	3	2003067-041	INTERFACE MODULE A27-29	38
2	2	2003070-031	INTERFACE MODULE A25-26	37
—	2	2003887-011	POWER SUPPLY MODULE A30-31	36
1	1	2003121-231	LOGIC MODULE A24	35
1	1	2003121-221	LOGIC MODULE A23	34
1	1	2003121-211	LOGIC MODULE A22	33
1	1	2003121-191	LOGIC MODULE A21	32
1	1	2003121-181	LOGIC MODULE A20	31
1	1	2003121-171	LOGIC MODULE A19	30
1	1	2003121-161	LOGIC MODULE A18	29
1	1	2003121-151	LOGIC MODULE A17	28
1	1	2003121-141	LOGIC MODULE A16	27
1	1	2003121-131	LOGIC MODULE A15	26
1	1	2003121-121	LOGIC MODULE A14	25
1	1	2003121-111	LOGIC MODULE A13	24
1	1	2003121-091	LOGIC MODULE A12	23
4	4	2003121-081	LOGIC MODULE A8-11	22
1	1	2003121-071	LOGIC MODULE A7	21
1	1	2003121-061	LOGIC MODULE A6	20
1	1	2003121-051	LOGIC MODULE A5	19
1	1	2003121-041	LOGIC MODULE A4	18
1	1	2003121-031	LOGIC MODULE A3	17
1	1	2003121-021	LOGIC MODULE A2	16
1	1	2003121-011	LOGIC MODULE A1	15
2	2	2003140-031	ROPE DRIVER MODULE B16-17	14
1	1	2003027-031	STRAND SELECT MODULE B15	13
1	1	2003982-021	SENSE AMPL MOD, ERASABLE MEMORY B13	12
1	1	2003111-021	ERASABLE MEMORY MODULE B12	11
1	1	2003026-031	CURRENT SWITCH MODULE B11	10
2	2	2003114-021	ERASABLE DRIVER MODULE B9-10	9
1	1	2003983-021	ALARM MODULE B8	8
1	1	2003036-031	OSCILLATOR MODULE B7	7
1	1	2003978-001	MID SPACER	6
1	1	2003059-021	INTERCONNECTION HEADER ASSEMBLY	5
1	1	2003976-011	TRAY B COVER	4
1	1	2003977-011	TRAY A COVER	3
1	1	2003093-021	TRAY B WIRED ASSEMBLY	2
—	1	2003092-031	TRAY A WIRED ASSEMBLY	1
SYT FIGS	QTY REQD	PART OR IDENTIFYING NO	NOMENCLATURE OR DESCRIPTION	FIGS NO

-031-011 LIST OF MATERIALS

2003991	
NEXT ASSY	USED ON
APPLICATION	

UNLESS OTHERWISE SPECIFIED DIMENSIONS ARE IN INCHES
CAPACITOR VALUES ARE IN μf
RESISTOR VALUES ARE IN OHMS
TOLERANCES ON
FRACTIONS DECIMALS ANGLES
DO NOT SCALE THIS DRAWING
MATERIAL —

SCIT INSTRUMENTATION LAB
CAMBRIDGE MASS

MANNED SPACECRAFT CENTER
HOUSTON TEXAS

DRAWN
CHECKED
APPROVED
APPROVED
APPROVED
APPROVED
APPROVED

COMPUTER ASSEMBLY

CODE IDENT NO 80230 | SIZE J | DRAWING NO 2003993

DATE | SCALE 1/1 | SHEET 1 OF 2

C1	
PART NO.	VALUE UUF
1006777-1	0
-15	150
-18	330
-20	470
-22	680
1006777-23	820
SEE NOTE 21	0
1006777-16	220
1006777-17	270

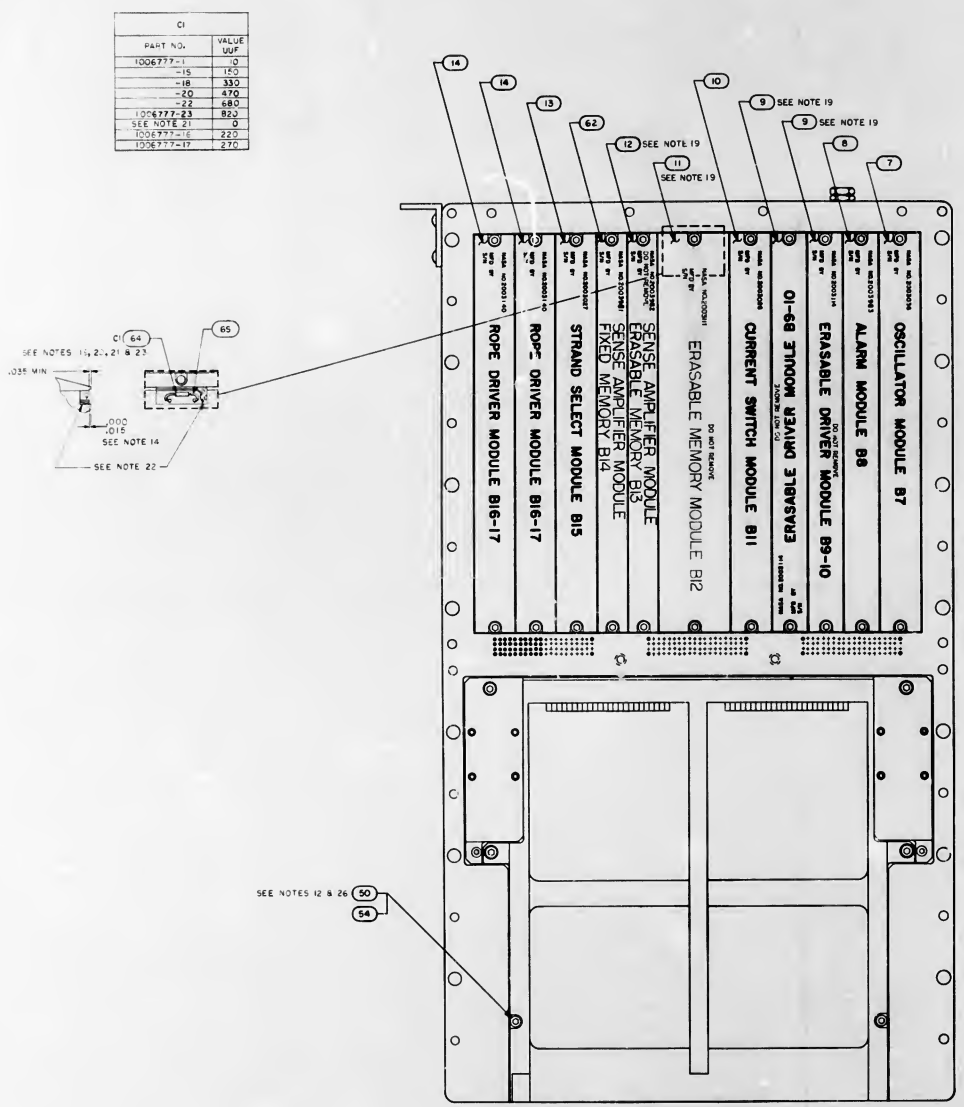

SECTION D-D

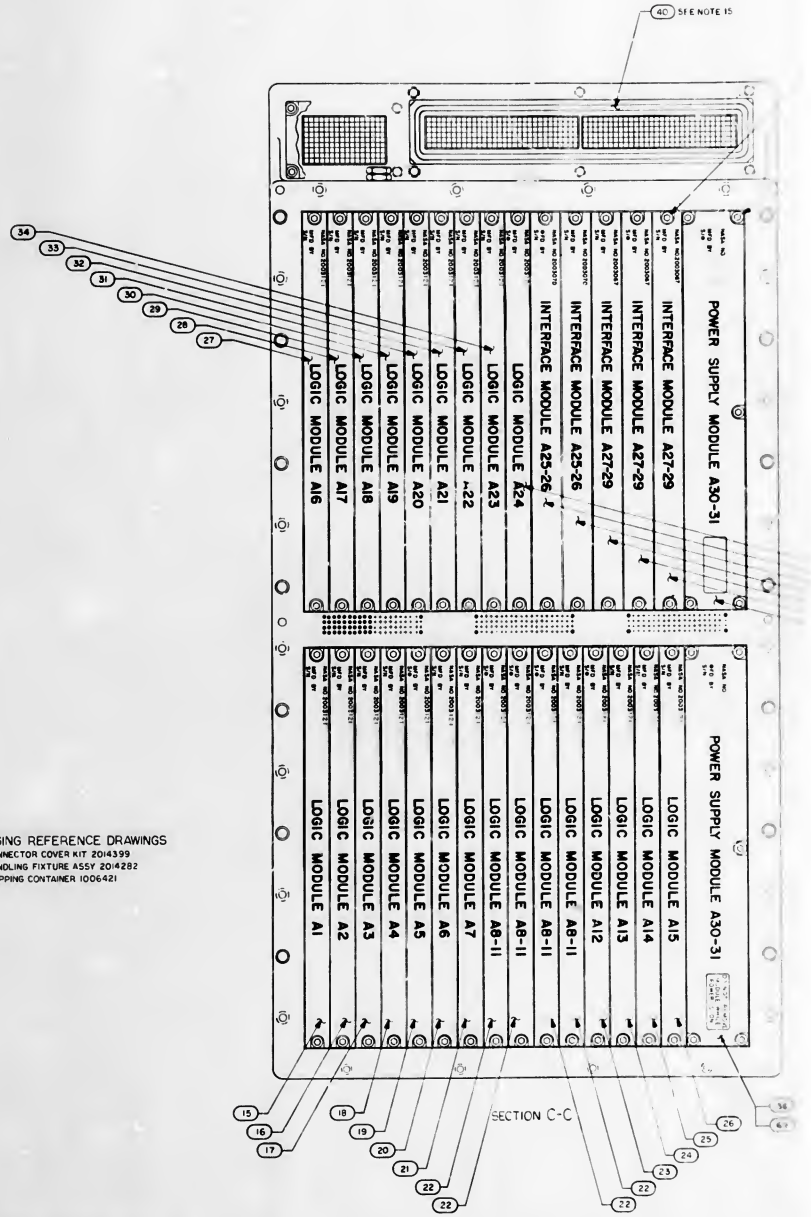

SECTION C-C

PACKAGING REFERENCE DRAWINGS
1. AGC CONNECTOR COVER KIT 2014399
2. AGC HANDLING FIXTURE ASSY 2014282
3. AGC SHIPPING CONTAINER 1006421

2003993 D

REVISIONS					
SYM	ZONE	DESCRIPTION	BY	CHK	DATE	APPROVED
A		NO A RELEASE TDRR 32958				
B		RELEASED PER TDRR 32965				
C		REVISED PER TDRR 33106				

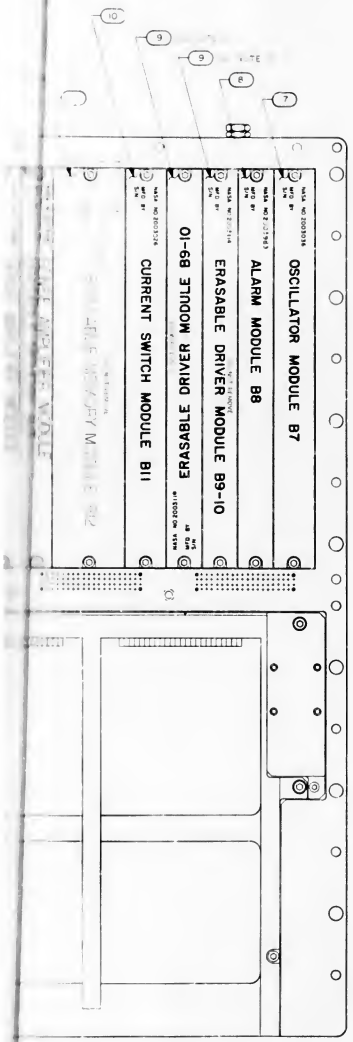

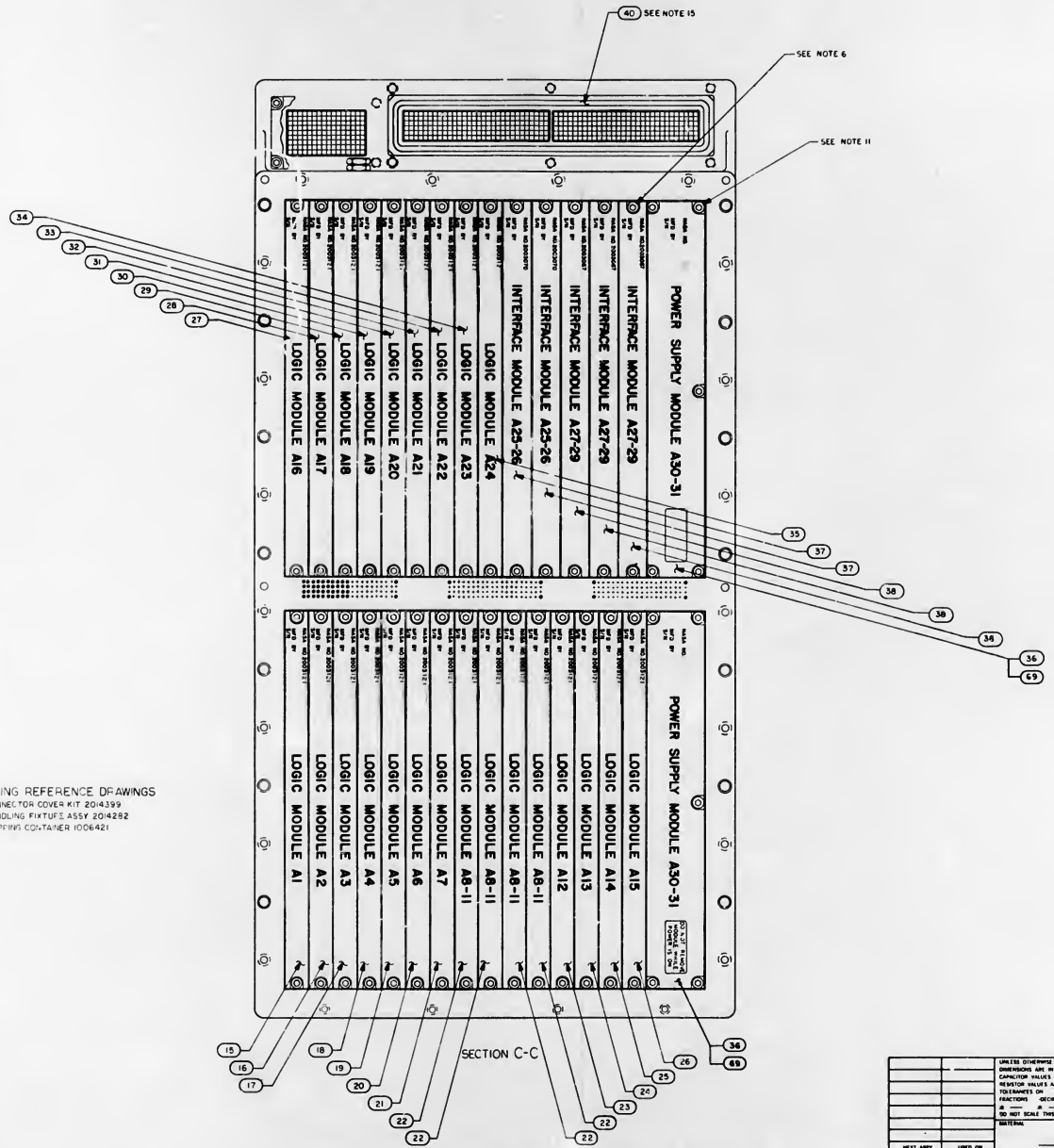

PACKAGING REFERENCE DRAWINGS
1. AGC CONNECTOR COVER KIT 2014399
2. AGC HANDLING FIXTURE ASSY 2014282
3. AGC SHIPPING CONTAINER 1006421

QTY REQD	PART OR IDENTIFYING NO	NOMENCLATURE OR DESCRIPTION	FIND NO
		LIST OF MATERIALS	

UNLESS OTHERWISE SPECIFIED DIMENSIONS ARE IN INCHES CAPACITOR VALUES ARE IN µf RESISTOR VALUES ARE IN OHMS TOLERANCES ON FRACTIONS ± — DECIMALS ± — ANGLES ± — DO NOT SCALE THIS DRAWING	MIT INSTRUMENTATION LAB CAMBRIDGE MASS	MANNED SPACECRAFT CENTER HOUSTON, TEXAS	
MATERIAL —	DRAWN / CHECKED / APPROVED / APPROVED	COMPUTER ASSEMBLY	
NEXT ASSY / USED ON	APPROVED / APPROVED	CODE IDENT NO 80230 / SIZE J / DRAWING NO 2003993	
APPLICATION	DATE / SCALE 1/1	SHEET 2 OF 2	

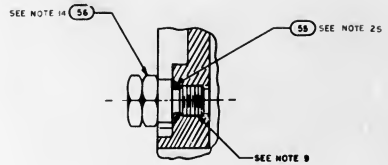

PARTIAL SECTION F F
SCALE: 2/1

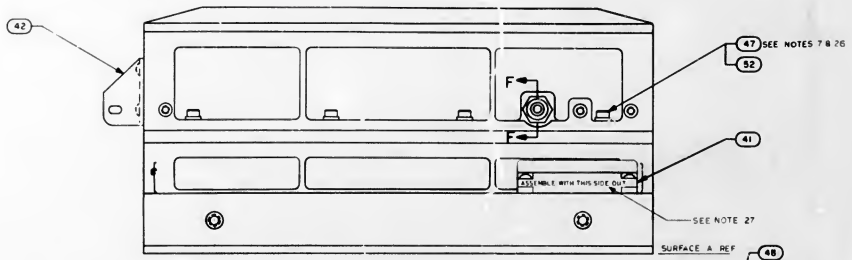

VIEW B-B

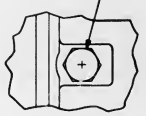

VIEW E-E

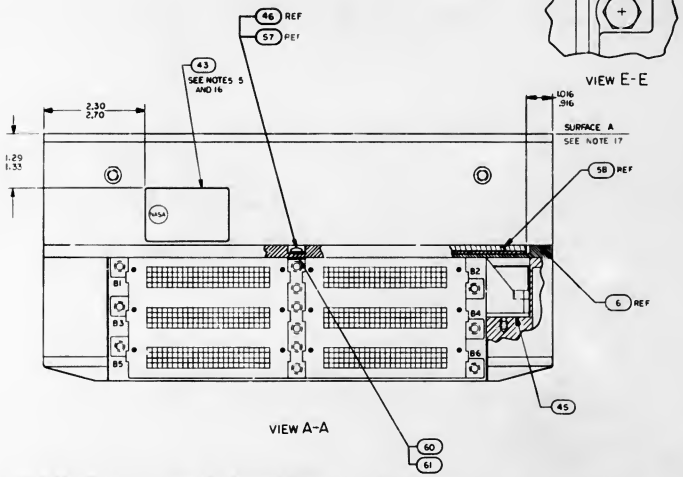

VIEW A-A

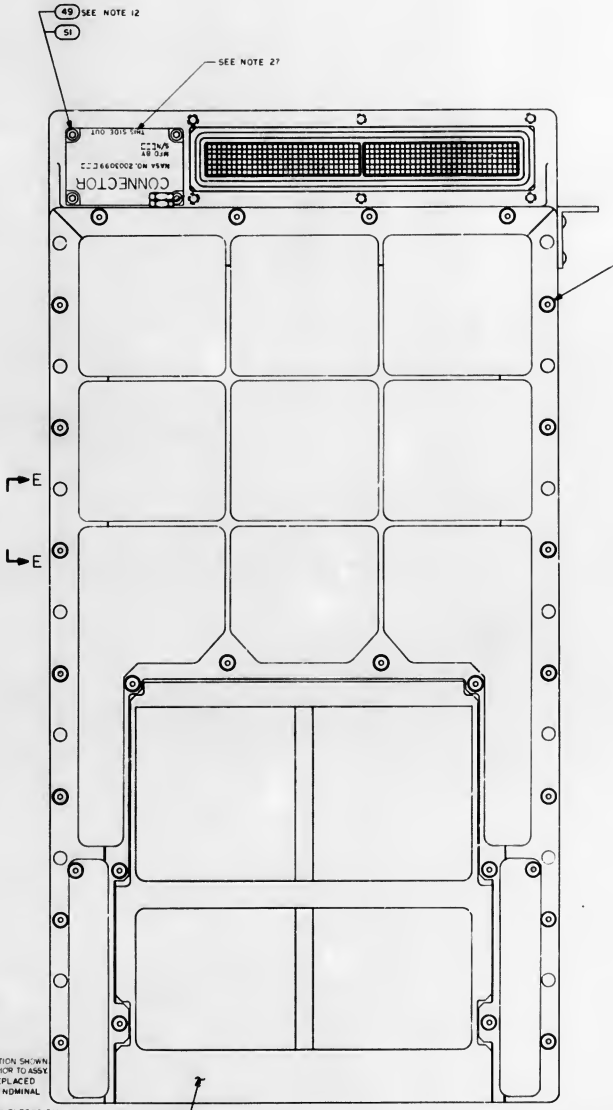

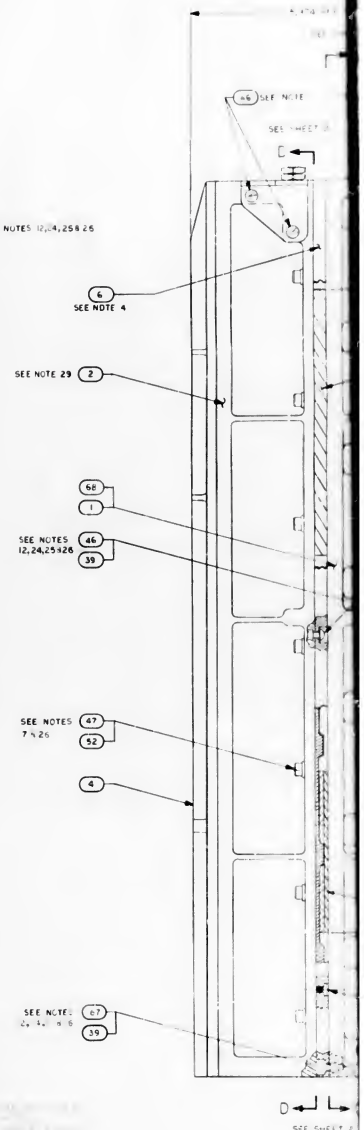

NOTES:

1. INTERPRET DRAWING IN ACCORDANCE WITH STANDARDS PRESCRIBED BY MIL-D-70327
2. PHANTOM LINES DENOTE AGC COLDPLATE AND HANDLING FIXTURE TO BE SUPPLIED BY NORTH AMERICAN AVIATION, INC
3. ADD SILICONE COMPOUND 1006879 TO MODULE MATING METAL SURFACES AND TRAY MATING SURFACES
4. ASSEMBLE FIND NO.53 AND FIND NO.63 TO FIND NO.6 AND FIND NO.6 TO FIND NO.2 PRIOR TO ASSEMBLY OF FIND NO.2 TO FIND NO.1 & FIND NO 68
5. BOND FIND NO.43 TO FIND NO.1 AND FIND NO.68 PER ND1002004 TYPE IV
6. UNLESS OTHERWISE SPECIFIED TORQUE ALL MODULE MOUNTING SCREWS 15/19 INCH POUNDS
7. TORQUE FIND NO.47 TO 28/32 INCH POUNDS
8. FINISH IS REQUIRED TO SATISFY ICD GAEC 510-10001
9. APPLY SEALING COMPOUND MIL-S-22473 GRADE H TO FIND NO.53, FIND NO.56 AND FIND NO.44
10. COMPLETED ASSEMBLY SHALL BE TESTED IN ACCORDANCE WITH AND SHALL MEET ALL THE REQUIREMENTS OF PS206007
11. TORQUE FOR FIND NO.36 AND FIND NO 69 MOUNTING SCREWS TO BE 4/6 INCH POUNDS
12. TORQUE FOR FIND NO. 46, 49, 50 AND 67 TO BE 18/22 INCH POUNDS
13. TORQUE FOR FIND NO.53 TO BE 4/6 INCH POUNDS
14. TORQUE FOR FIND NO. 44 AND FIND NO. 56 TO BE 137/157 INCH POUNDS
15. FIND NO.40 SHALL BE SUPPLIED AS PART OF THIS ASSEMBLY
16. MARK COMPUTER ASSEMBLY AND RELATED PART NO., APPLICABLE DASH NO., SERIAL NO. AND CONTRACT NO. PER 1004260 AND SERIALIZE PER ND1002023
17. FINISH SURFACE A PER ICD NAA MH01-01302-116 THIS ASSEMBLY MUST BE CAPAPLE OF MEETING ELECTRICAL BONDING REQUIREMENTS OF ICD NAA MH01-01302-116
18. BOND FIND NO.58 TO FIND NO. 6 IN POSITION SHOWN USING 1006338, CURE AT ROOM TEMP 24 HR. PRIOR TO ASSY.
19. REFERENCED MODULES MUST NOT BE REPLACED OR INTERCHANGED WITHOUT REPEATING NOMINAL SELECTION PROCEDURE PER NOTE 10
20. THE VALUE OF C1 TO BE DETERMINED AT ELECTRICAL TEST AND SELECTED FROM APPROPRIATE CHART
21. WHEN THE VALUE OF C1 IS ZERO NO COMPONENT SHALL BE USED
22. ENCAPSULATE AREA SHOWN AFTER SELECTION AND INSTALLATION OF C1 USING ND1002009 METHOD C OR D USING PRIMER PER SCD1012513
23. WELD PER ND1002005
24. ASSEMBLE HARDWARE WITH SMOOTH FACE OF FIND NO. 39 IN CONTACT WITH SCREW HEAD
25. FIND NO.39, 48, 55 & 57 TO BE DISCARDED AND REPLACED WITH NEW PARTS EACH TIME THEY ARE DISASSEMBLED
26. SEAL EXPOSED HARDWARE ASSEMBLIES WITH .002 MIN THICK COATING OF FIND NO.66. OVERALL COMPUTER ASSEMBLY DIMENSIONS SHALL NOT BE EXCEEDED. CURE AT ROOM TEMP 24 HRS.
27. STENCILING SHOWN FOR ORIENTATION ONLY
28. KEEP ALL MATING THREADS OF SCREWS, TRAY AND MID SPACER INSERTS FREE OF SILICONE COMPOUND
29. FILL FEMALE INSULATORS OF B41 AND B42 CONNECTORS USING FIND NO.70 PRIOR TO ASSEMBLY OF FIND NO.5 TO FIND NO.2

2003002 E

REV SYM	REV CODE	DESCRIPTION	DR	CHK	DATE	APPROVAL
A		INITIAL RELEASE TRW FLOW				
B		REVISED PER TURR 32965				
C		REVISED PER TURR 33[illegible]				
D		REVISED PER TDRR [illegible]				
E		REVISED PER TDRR [illegible]				

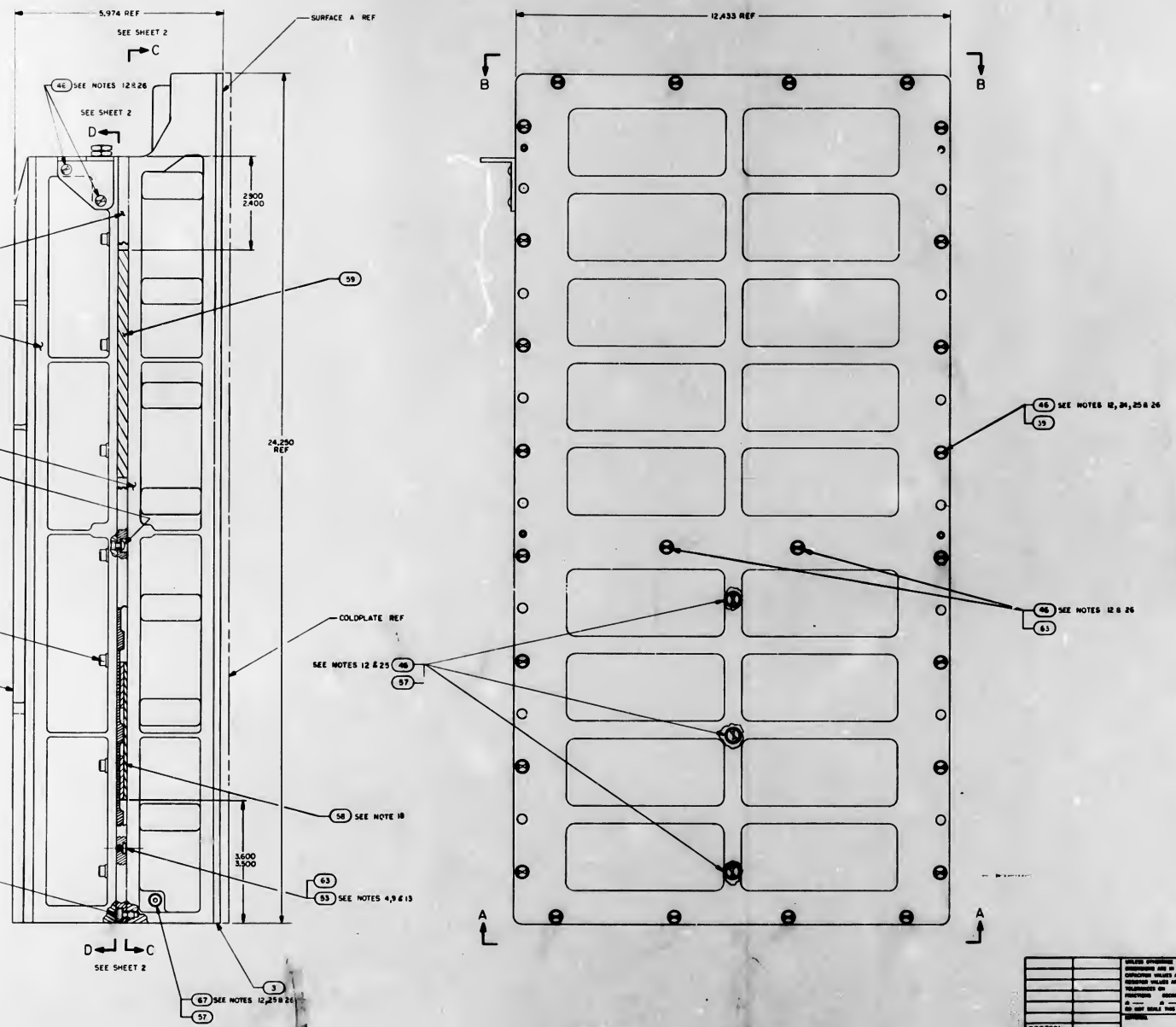

				REF
		2005944	AGC WIRE LIST	
AR	AR	MIL-S-8660	SILICONE COMPOUND	70
2	—	2003892-011	POWER SUPPLY MODULE A30-31	69
1	—	2003092-041	TRAY "A" WIRED ASSY	68
33	33	2004732-002	SCREW, COATED	67
AR	AR	1006338-000	SEALING COMPOUND, SILICONE RUBBER	66
AR	AR	1006276-22	INSULATION, SLEEVING ELECTRICAL	65
1	1	SEE NOTE 30	CAPACITOR	64
10	10	2004148-007	WASHER, FLAT	63
1	1	SEE NOTE 31	SENSE AMPLIFIER MODULE, FIXED MEMORY B14	62
AR	AR	2004895-002	SHIM AGC	61
AR	AR	2004895-001	SHIM AGC	60
1	1	2004899-001	PAD VIBRATION	59
1	1	2003970	VIBRATION PAD ASSY	58
4	4	NAS1598-008H	WASHER, SEALING	57
1	1	2018773	VALVE, PRESSURE ASSEMBLY	56
1	1	1000159-8	PACKING, PREFORMED "O" RING	55
2	2	2004984-001	WASHER, FLAT	54
8	8	2004130	PAD, THREADED	53
18	18	2004894-014	WASHER, FLAT	52
4	4	2004894-012	WASHER, FLAT	51
8	2	1001489-36	SCREW, HEX SOCKET HEAD	50
4	4	1004722-2	SCREW, CAPTIVE	49
1	1	1000159-7	PACKING, PREFORMED "O" RING	48
18	18	2004732-003	SCREW, COATED	47
33	33	2004732-001	SCREW, COATED	46
2	2	2004347	GASKET, PLATE	45
1	1	1004946	PLUG, MACHINE THREAD	44
1	1	1004260-19	NAME PLATE, TYPE 8	43
1	1	2004113-001	BRACKET, CABLE	42
1	1	2004019-011	CONNECTOR ASSEMBLY	41
1	1	1006380	GASKET, RETAINED	40
58	58	2004707	WASHER, KNURLED	39
3	3	2003067-041	INTERFACE MODULE A27-29	38
2	2	2003070-031	INTERFACE MODULE A25-26	37
—	2	2003867-011	POWER SUPPLY MODULE A30-31	36
1	1	2003121-241	LOGIC MODULE A24	35
1	1	2003121-221	LOGIC MODULE A23	34
1	1	2003121-211	LOGIC MODULE A22	33
1	1	2003121-191	LOGIC MODULE A21	32
1	1	2003121-181	LOGIC MODULE A20	31
1	1	2003121-171	LOGIC MODULE A19	30
1	1	2003121-161	LOGIC MODULE A18	29
1	1	2003121-151	LOGIC MODULE A17	28
1	1	2003121-141	LOGIC MODULE A16	27
1	1	2003121-131	LOGIC MODULE A15	26
1	1	2003121-121	LOGIC MODULE A14	25
1	1	2003121-111	LOGIC MODULE A13	24
1	1	2003121-091	LOGIC MODULE A12	23
4	4	2003121-081	LOGIC MODULE A8-11	22
1	1	2003121-071	LOGIC MODULE A7	21
1	1	2003121-061	LOGIC MODULE A6	20
1	1	2003121-051	LOGIC MODULE A5	19
1	1	2003121-041	LOGIC MODULE A4	18
1	1	2003121-031	LOGIC MODULE A3	17
1	1	2003121-021	LOGIC MODULE A2	16
1	1	2003121-011	LOGIC MODULE A1	15
2	2	2003140-031	ROPE DRIVER MODULE B16-17	14
1	1	2003027-031	STRAND SELECT MODULE B15	13
1	1	SEE NOTE 30	SENSE AMPL MOD ERASABLE MEMORY B13	12
1	1	2003111-021	ERASABLE MEMORY MODULE B12	11
1	1	2003026-031	CURRENT SWITCH MODULE B11	10
2	2	2003124-021	ERASABLE DRIVER MODULE B9-10	9
1	1	2003[illegible]-031	ALARM MODULE B8	8
1	1	2003038-031	OSCILLATOR MODULE B7	7
1	1	2003978-001	MID SPACER	6
1	1	2003059-021	INTERCONNECTION HEADER ASSEMBLY	5
1	1	2003976-011	TRAY B COVER	4
1	1	2003977-011	TRAY A COVER	3
1	1	2003093-021	TRAY B WIRED ASSEMBLY	2
1	1	2003092-031	TRAY A WIRED ASSEMBLY	1
QTY REQD	QTY REQD	PART NUMBER OR DESCRIPTION	NOMENCLATURE OR DESCRIPTION	FIGURE NO

-5001-011 LIST OF MATERIALS

UNLESS OTHERWISE SPECIFIED DIMENSIONS ARE IN INCHES CAPACITOR VALUES ARE IN µf RESISTOR VALUES ARE IN OHMS TOLERANCES ON FRACTIONS ±[illegible] ANGLES ±[illegible] ON NEXT HIGHER THAN DRAWING DIGITS

2003991 NEXT ASSY USED ON APPLICATION

MIT INSTRUMENTATION LAB CAMBRIDGE MASS.

MANNED SPACECRAFT CENTER HOUSTON, TEXAS

COMPUTER ASSEMBLY

CODE IDENT NO 80230 SIZE J DRAWING NO 2003993

SCALE 1/ SHEET 1 OF 2

C1	
PART NO.	VALUE UUF
1006777-1	0
-15	150
-18	330
-20	470
-22	680
1006777-23	820
SEE NOTE 21	0
1006777-16	220
1006777-17	270

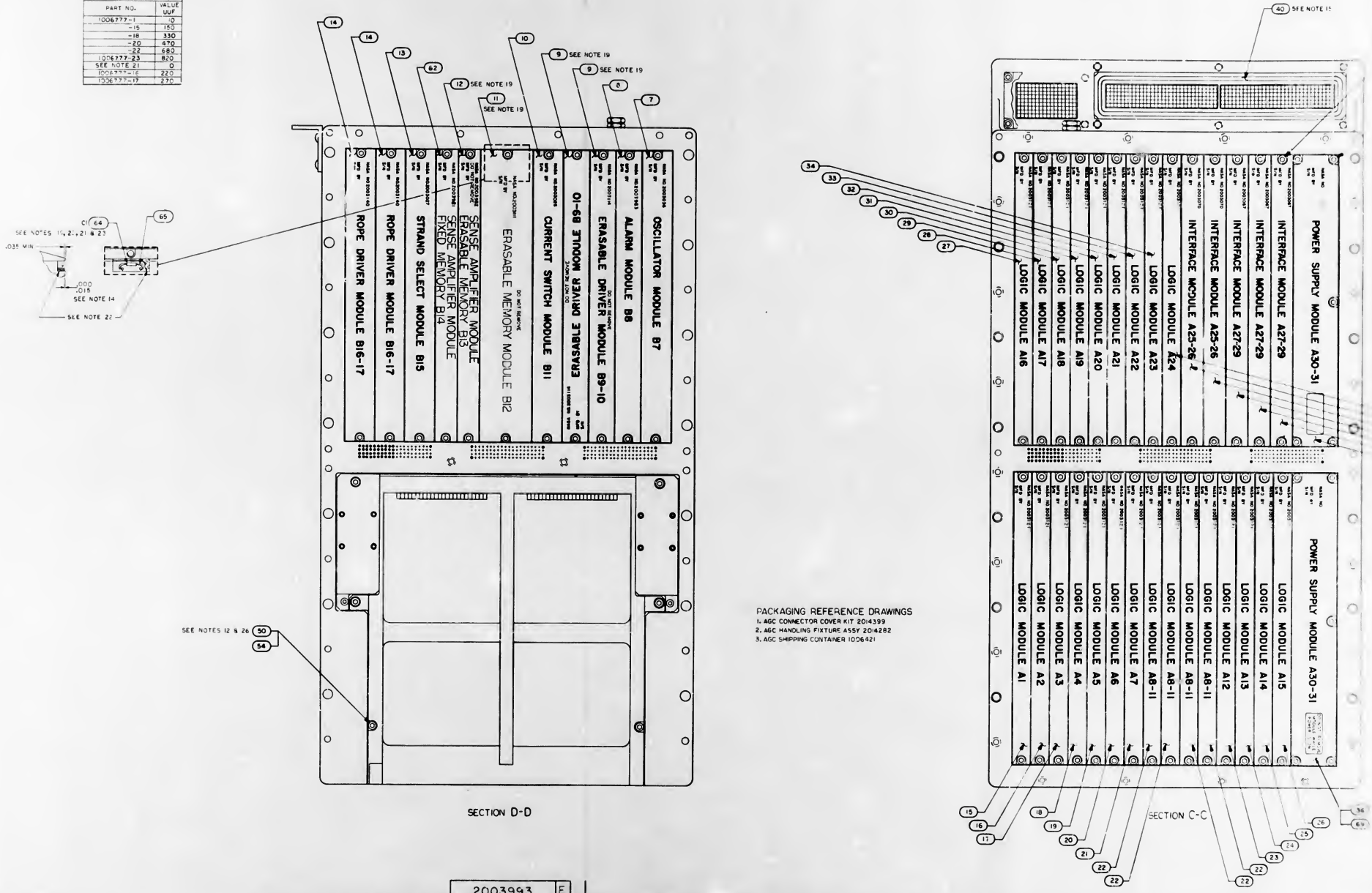

PACKAGING REFERENCE DRAWINGS
1. AGC CONNECTOR COVER KIT 2014399
2. AGC HANDLING FIXTURE ASSY 2014282
3. AGC SHIPPING CONTAINER 1006421

2003993

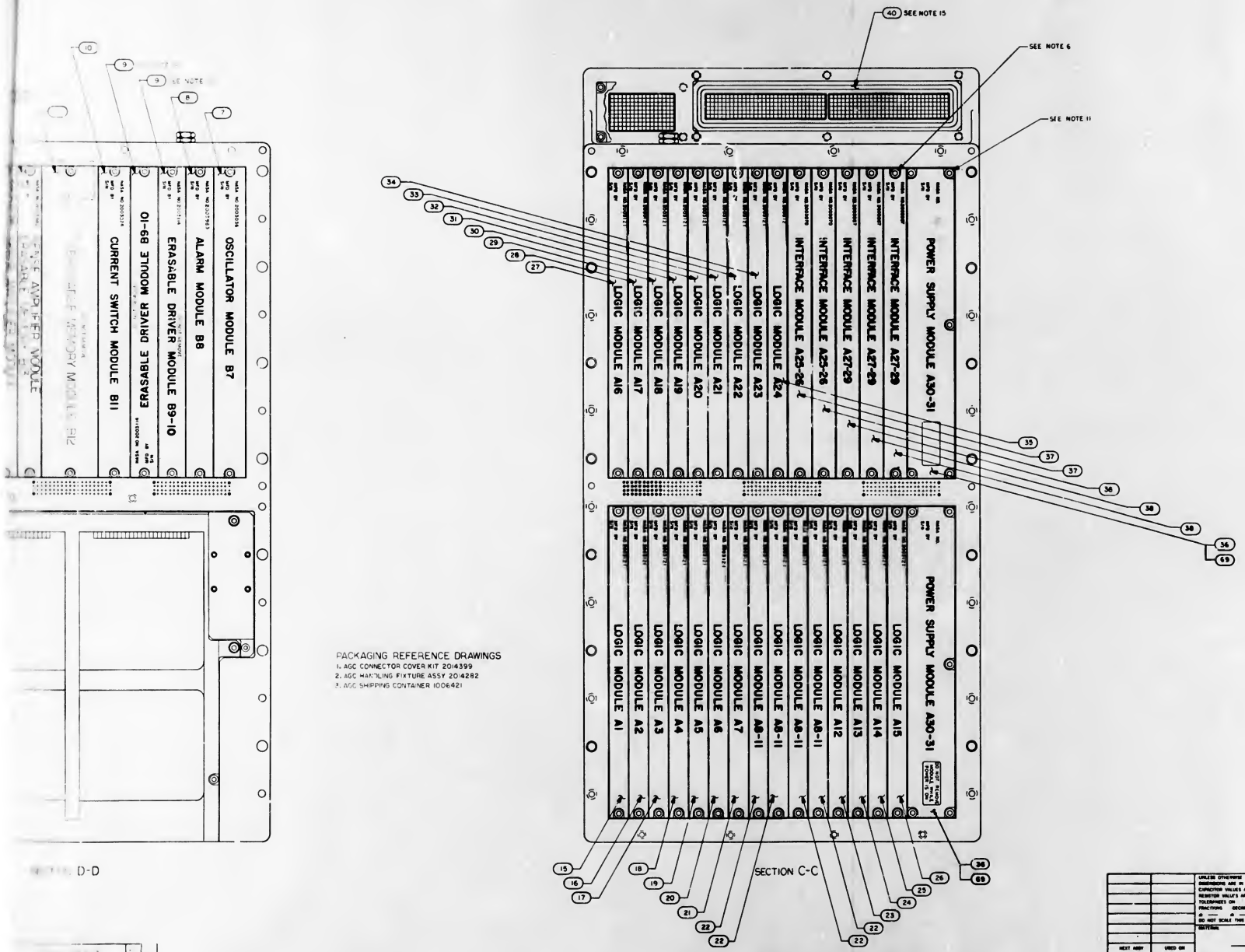

PACKAGING REFERENCE DRAWINGS
1. AGC CONNECTOR COVER KIT 2014399
2. AGC HANDLING FIXTURE ASSY 2014282
3. AGC SHIPPING CONTAINER 1006421

REVISIONS					
SYM	ZONE	DESCRIPTION	BY	CHK	DATE	APPROVED
A		PER A RELEASE TORA 32958				
B		RELEASED PER TORA 32983				
C		REV BY PER TORA 33				
D		REVISED PER TORA 33				
E						

QTY REQ	PART OR IDENTIFYING NO	NOMENCLATURE OR DESCRIPTION	FIND NO
		LIST OF MATERIALS	

MIT INSTRUMENTATION LAB CAMBRIDGE, MASS.

MANNED SPACECRAFT CENTER HOUSTON, TEXAS

DRAWN
CHECKED
APPROVED
APPROVED

UNLESS OTHERWISE SPECIFIED DIMENSIONS ARE IN INCHES CAPACITOR VALUES ARE IN μf RESISTOR VALUES ARE IN OHMS TOLERANCES ON FRACTIONS DECIMALS ANGLES ± ± ± DO NOT SCALE THIS DRAWING MATERIAL

NEXT ASSY | USED ON | APPLICATION

COMPUTER ASSEMBLY

CODE IDENT NO 80230 | SIZE J | DRAWING NO 2003993

APPROVED
APPROVED
DATE | SCALE 1/1 | SHEET 2 OF 2

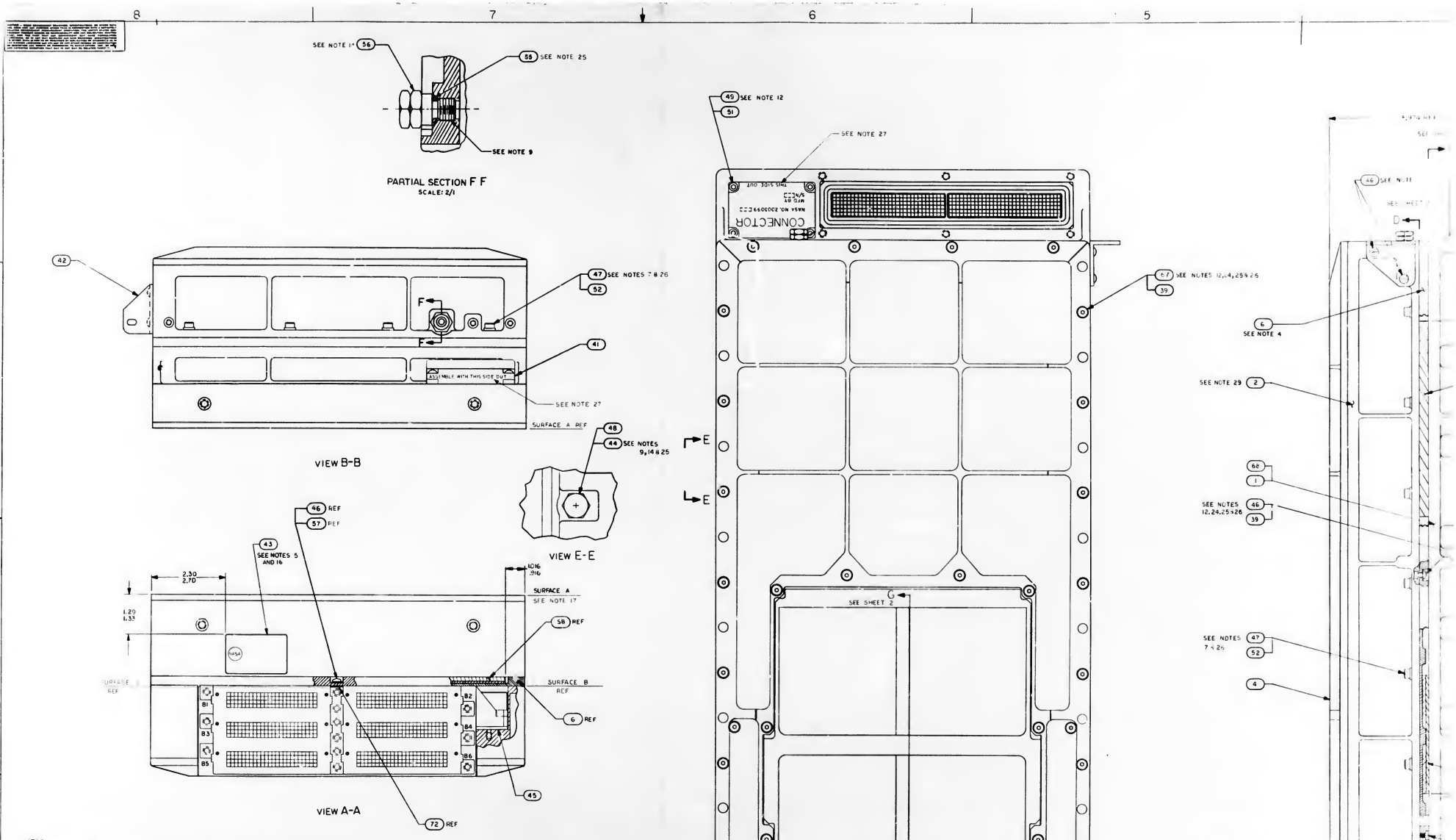

NOTES:

1. INTERPRET DRAWING IN ACCORDANCE WITH STANDARDS PRESCRIBED BY MIL-D-70327
2. PHANTOM LINES DENOTE AGC COLDPLATE AND HANDLING FIXTURE TO BE SUPPLIED BY NORTH AMERICAN AVIATION, INC
3. ADD SILICONE COMPOUND 1006879 TO MODULE MATING METAL SURFACES AND TRAY MATING SURFACES
4. ASSEMBLE FIND NO. 53 AND FIND NO. 63 TO FIND NO. 6 AND FIND NO. 6 TO FIND NO. 2 PRIOR TO ASSEMBLY OF FIND NO. 2 TO FIND NO. 1 & FIND NO. 68
5. BOND FIND NO. 43 TO FIND NO. 1 AND FIND NO. 68 PER ND1002004 TYPE IV
6. UNLESS OTHERWISE SPECIFIED TORQUE ALL MODULE MOUNTING SCREWS 15/19 INCH POUNDS
7. TORQUE FIND NO. 47 TO 28/32 INCH POUNDS
8. FINISH IS REQUIRED TO SATISFY ICD GAEC SID-10001
9. APPLY SEALING COMPOUND MIL-S 22473 GRADE H TO FIND NO. 53, FIND NO. 56 AND FIND NO. 44
10. COMPLETED ASSEMBLY SHALL BE TESTED IN ACCORDANCE WITH ANC SHALL MEET ALL THE REQUIREMENTS OF PS2016007
11. TORQUE FOR FIND NO. 36 AND FIND NO. 69 MOUNTING SCREWS TO BE 4/6 INCH POUNDS
12. TORQUE FOR FIND NO. 46, 49, 50 AND 67 TO BE 18/22 INCH POUNDS
13. TORQUE FOR FIND NO. 53 TO BE 4/6 INCH POUNDS
14. TORQUE FOR FIND NO. 44 AND FIND NO. 56 TO BE 137/157 INCH POUNDS
15. FIND NO. 40 SHALL BE SUPPLIED AS PART OF THIS ASSEMBLY
16. MARK COMPUTER ASSEMBLY AND RELATED PART NO., APPLICABLE DASH NO., SERIAL NO. AND CONTRACT NO. PER 1004260 AND SERIALIZE PER ND1002023
17. FINISH SURFACE [A] PER ICD NAA MH01-01302-116 THIS ASSEMBLY MUST BE CAPABLE OF MEETING ELECTRICAL BONDING REQUIREMENTS OF ICD NAA MH01-01302-116
18. BOND FIND NO. 58 TO FIND NO. 6 IN POSITION SHOWN USING 1006331, CURE AT ROOM TEMP 24 HRS. PRIOR TO ASSY
19. REFERENCED MODULES MUST NOT BE REPLACED OR INTERCHANGED WITHOUT REPEATING NOMINAL SELECTION PROCEDURE PER NOTE 10
20. THE VALUE OF C1 TO BE DETERMINED AT ELECTRICAL TEST AND SELECTED FROM APPROPRIATE CHART
21. WHEN THE VALUE OF C1 IS ZERO NO COMPONENT SHALL BE USED
22. ENCAPSULATE AREA SHOWN AFTER SELECTION AND INSTALLATION OF C1 USING ND1002009 METHOD C OR D USING PRIMER PER SCDI012513
23. WELD PER ND1002005
24. ASSEMBLE HARDWARE WITH SMOOTH FACE OF FIND NO. 39 IN CONTACT WITH SCREW HEAD
25. FIND NO. 39, 48, 55 & 57 TO BE DISCARDED AND REPLACED WITH NEW PARTS EACH TIME THEY ARE DISASSEMBLED
26. SEAL EXPOSED HARDWARE ASSEMBLIES WITH .002 MIN THICK COATING OF FIND NO. 66. OVERALL COMPUTER ASSEMBLY DIMENSIONS SHALL NOT BE EXCEEDED. CURE AT ROOM TEMP 24 HRS
27. STENCILING SHOWN FOR ORIENTATION ONLY
28. KEEP ALL MATING THREADS OF SCREWS, TRAY AND MID SPACER INSERTS FREE OF SILICONE COMPOUND
29. FILL FEMALE INSULATORS OF 841 AND 842 CONNECTORS USING FIND NO. 70 PRIOR TO ASSEMBLY OF FIND NO. 5 TO FIND NO. 2
30. FIND NO. 12 ERASEABLE MEMORY, SENSE AMPLIFIER MODULE USE EITHER 2003982-F01, 2003982-F02
31. FIND NO. 62 FIXED MEMORY, SENSE AMPLIFIER MODULE USE EITHER 2003981-G01, 2003981-G21
32. BOND FIND NO. 72 ALIGNING EDGES TO FIND NO. 5 PER ND1002004, TYPE II PRIOR TO ASSEMBLY OF FIND NO. 6
33. SEE SHEET 2
34. SEE SHEET 2

2002993 F

REVISIONS						
SYM	ZONE	DESCRIPTION	BY	CHK	DATE	APPROVED
—	—	[illegible]	—	—	—	—
—	—	[illegible]	—	—	—	—
—	—	REVISED PER TORR 3365	—	—	—	—
—	—	REVISED PER TORR 3365	—	—	—	—
—	—	REVISED PER TORR 3365	—	—	—	—
F		REVISED PER TORR 3365				

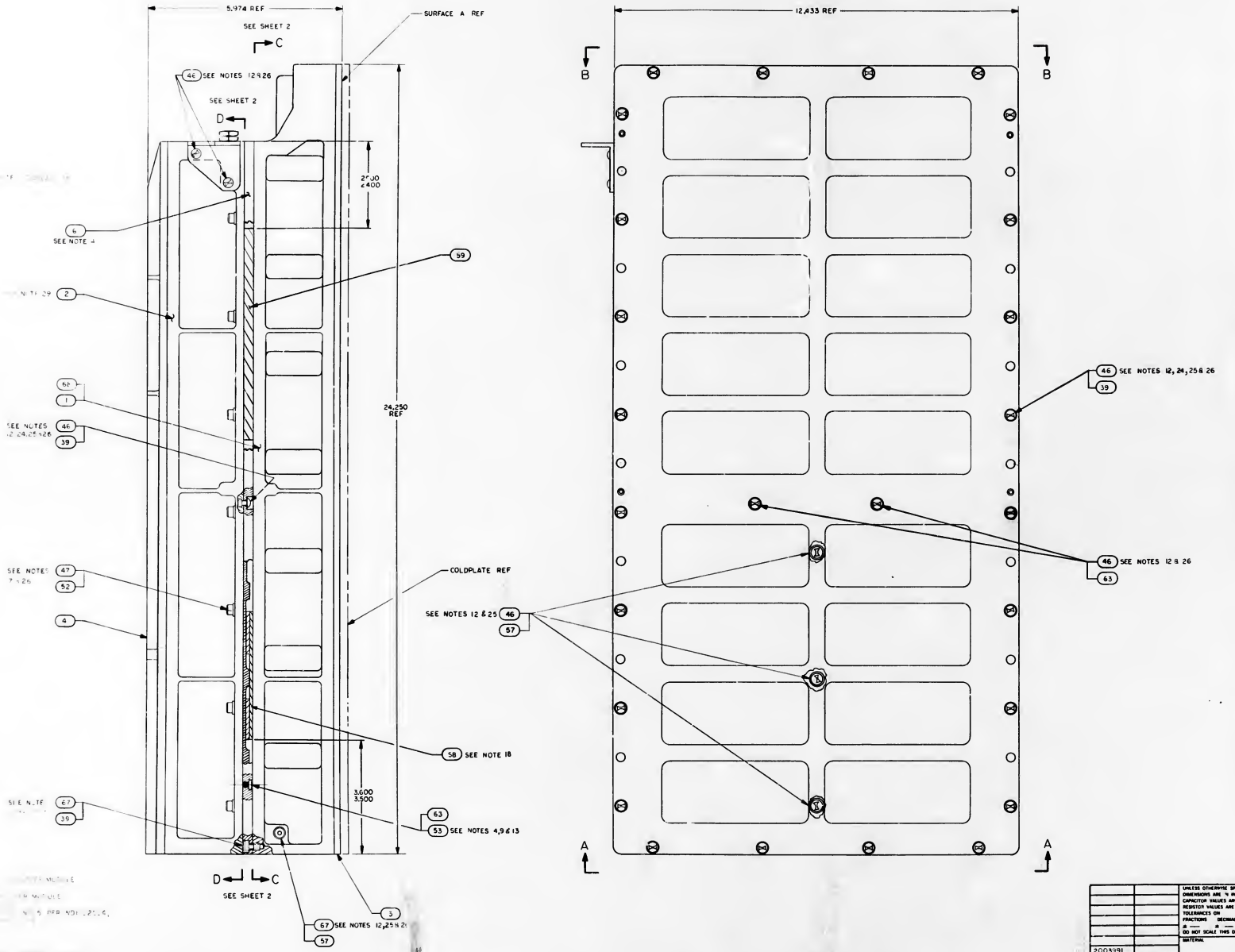

QTY REQD		PART OR IDENTIFYING NO	NOMENCLATURE OR DESCRIPTION	FIND NO
AR	AR	2001801	SHIM AGC	72
AR	AR	2001802-006	SHIM	71
		2005944	AGC WIRE LIST	FIG
AR	AR	MIL-S-8660	SILICONE COMPOUND	70
2	—	2003892-011	POWER SUPPLY MODULE A30-31	69
1	—	2003092-041	TRAY "A" WIRED ASSY	68
33	33	2004732-002	SCREW, COATED	67
AR	AR	1006338-000	SEALING COMPOUND, SILICONE RUBBER	66
AR	AR	1006776-22	INSULATION, SLEEVING ELECTRICAL	65
1	1	SEE NOTE 20	CAPACITOR	64
10	10	2004148-007	WASHER, FLAT	63
1	1	SEE NOTE 31	SENSE AMPLIFER MODULE, FIXED MEMORY B14	62
~~AR~~	~~AR~~	~~2004833-002~~	~~SHIM AGC~~	61
~~AR~~	~~AR~~	~~2004833-001~~	~~SHIM AGC~~	60
1	1	2004899-001	PAD VIBRATION	59
1	1	2003970	VIBRATION PAD ASSY	58
4	4	NAS1598-008N	WASHER, SEALING	57
1	1	2018773	VALVE PRESSURE ASSEMBLY	56
1	1	1000159-5	PACKING, PREFORMED "O" RING	55
2	2	2004984-001	WASHER, FLAT	54
8	8	2004130	PAD, THREADED	53
18	18	2004894-014	WASHER, FLAT	52
4	4	2004894-012	WASHER, FLAT	51
2	2	1001489-36	SCREW, HEX SOCKET HEAD	50
4	4	1004722-2	SCREW, CAPTIVE	49
1	1	1000159-7	PACKING, PREFORMED "O" RING	48
18	18	2004732-003	SCREW, COATED	47
33	33	2004732-001	SCREW, COATED	46
2	2	1006347	GASKET, PLATE	45
1	1	2004986	PLUG, MACHINE THREAD	44
1	1	1004260-19	NAME PLATE, TYPE I	43
1	1	2004113-001	BRACKET, CABLE	42
1	1	2003099-011	CONNECTOR ASSEMBLY	41
1	1	1006380	GASKET, RETAINED	40
58	58	2004707	WASHER, KNURLED	39
3	3	2003067-041	INTERFACE MODULE A27-29	38
2	2	2003070-031	INTERFACE MODULE A25-26	37
—	2	2003887-011	POWER SUPPLY MODULE A30-31	36
1	1	2003121-231	LOGIC MODULE A24	35
1	1	2003121-221	LOGIC MODULE A23	34
1	1	2003121-211	LOGIC MODULE A22	33
1	1	2003121-191	LOGIC MODULE A21	32
1	1	2003121-181	LOGIC MODULE A20	31
1	1	2003121-171	LOGIC MODULE A19	30
1	1	2003121-161	LOGIC MODULE A18	29
1	1	2003121-151	LOGIC MODULE A17	28
1	1	2003121-141	LOGIC MODULE A16	27
1	1	2003121-131	LOGIC MODULE A15	26
1	1	2003121-121	LOGIC MODULE A14	25
1	1	2003121-111	LOGIC MODULE A13	24
1	1	2003121-091	LOGIC MODULE A12	23
4	4	2003121-081	LOGIC MODULE A8-11	22
1	1	2003121-071	LOGIC MODULE A7	21
1	1	2003121-061	LOGIC MODULE A6	20
1	1	2003121-051	LOGIC MODULE A5	19
1	1	2003121-041	LOGIC MODULE A4	18
1	1	2003121-031	LOGIC MODULE A3	17
1	1	2003121-021	LOGIC MODULE A2	16
1	1	2003121-011	LOGIC MODULE A1	15
2	2	2003140-031	ROPE DRIVER MODULE B16-17	14
1	1	2003027-031	STRAND SELECT MODULE B15	13
1	1	SEE NOTE 10	SENSE AMPL MOD, ERASABLE MEMORY B13	12
1	1	2003111-021	ERASABLE MEMORY MODULE B12	11
1	1	2003026-031	CURRENT SWITCH MODULE B11	10
2	2	2003114-021	ERASABLE DRIVER MODULE B9-10	9
1	1	2003883-021	ALARM MODULE B8	8
1	1	2003036-031	OSCILLATOR MODULE B7	7
1	1	2003978-001	MID SPACER	6
1	1	2003059-021	INTERCONNECTION HEADER ASSEMBLY	5
1	1	2003976-011	TRAY B COVER	4
1	1	2003977-011	TRAY A COVER	3
1	1	2003093-021	TRAY B WIRED ASSEMBLY	2
—	1	2003092-031	TRAY A WIRED ASSEMBLY	1
-021	-011		LIST OF MATERIALS	

UNLESS OTHERWISE SPECIFIED DIMENSIONS ARE IN INCHES
CAPACITOR VALUES ARE IN μf
RESISTOR VALUES ARE IN OHMS
TOLERANCES ON
FRACTIONS DECIMALS AND ±
.X ± .XX ± .XXX ±
DO NOT SCALE THIS DRAWING

MATERIAL —

NEXT ASSY	USED ON
2003991	

APPLICATION

MIT INSTRUMENTATION LAB CAMBRIDGE MASS

DRAWN
CHECKED
APPROVED
APPROVED
APPROVED MFG
APPROVED QUAL
APPROVED MSC

MANNED SPACECRAFT CENTER HOUSTON TEXAS

COMPUTER ASSEMBLY

CODE IDENT NO	SIZE	DRAWING NO
80230	J	2003993

SCALE 1/1 — SHEET 1 OF 2

C1	
PART NO.	VALUE UUF
1006777-11	10
-15	150
-18	330
-20	470
-22	680
1006777-23	820
SEE NOTE 21	0
1006777-6	220
1006777-17	270

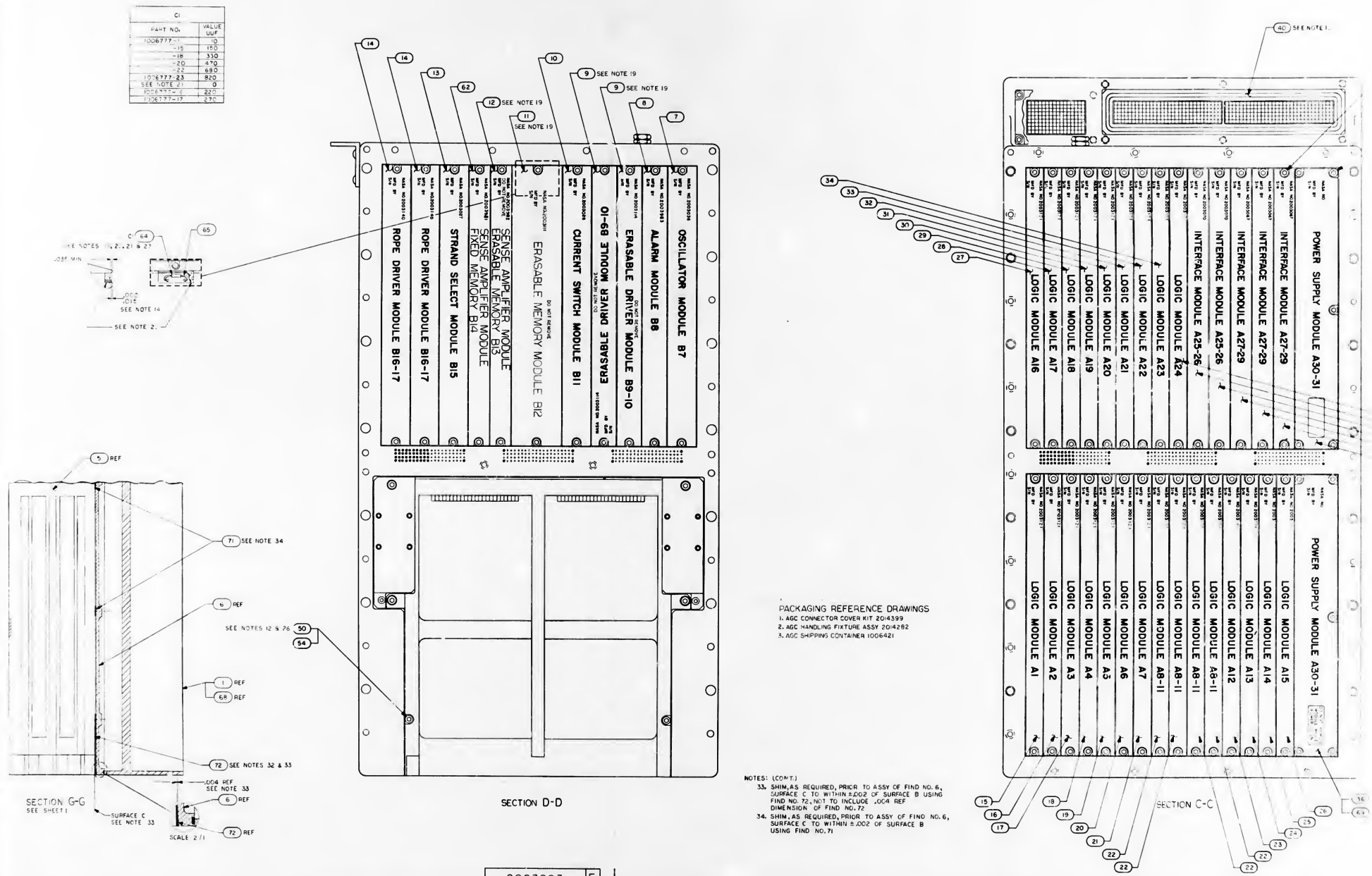

PACKAGING REFERENCE DRAWINGS
1. AGC CONNECTOR COVER KIT 2014399
2. AGC HANDLING FIXTURE ASSY 2014282
3. AGC SHIPPING CONTAINER 1006421

NOTES: (CONT.)
33. SHIM, AS REQUIRED, PRIOR TO ASSY OF FIND NO. 6, SURFACE C TO WITHIN ±.002 OF SURFACE B USING FIND NO. 72, NOT TO INCLUDE .004 REF DIMENSION OF FIND NO. 72
34. SHIM, AS REQUIRED, PRIOR TO ASSY OF FIND NO. 6, SURFACE C TO WITHIN ±.002 OF SURFACE B USING FIND NO. 71

2003993 F

REVISIONS						
SYM	ZONE	DESCRIPTION	BY	CHK	DATE	APPROVAL
A		RELEASE TDRR 32958				
B		RELEASED PER TDRR 32965				
		REVISED PER TDRR 33306				
F		REVISED PER TDRR 33639				

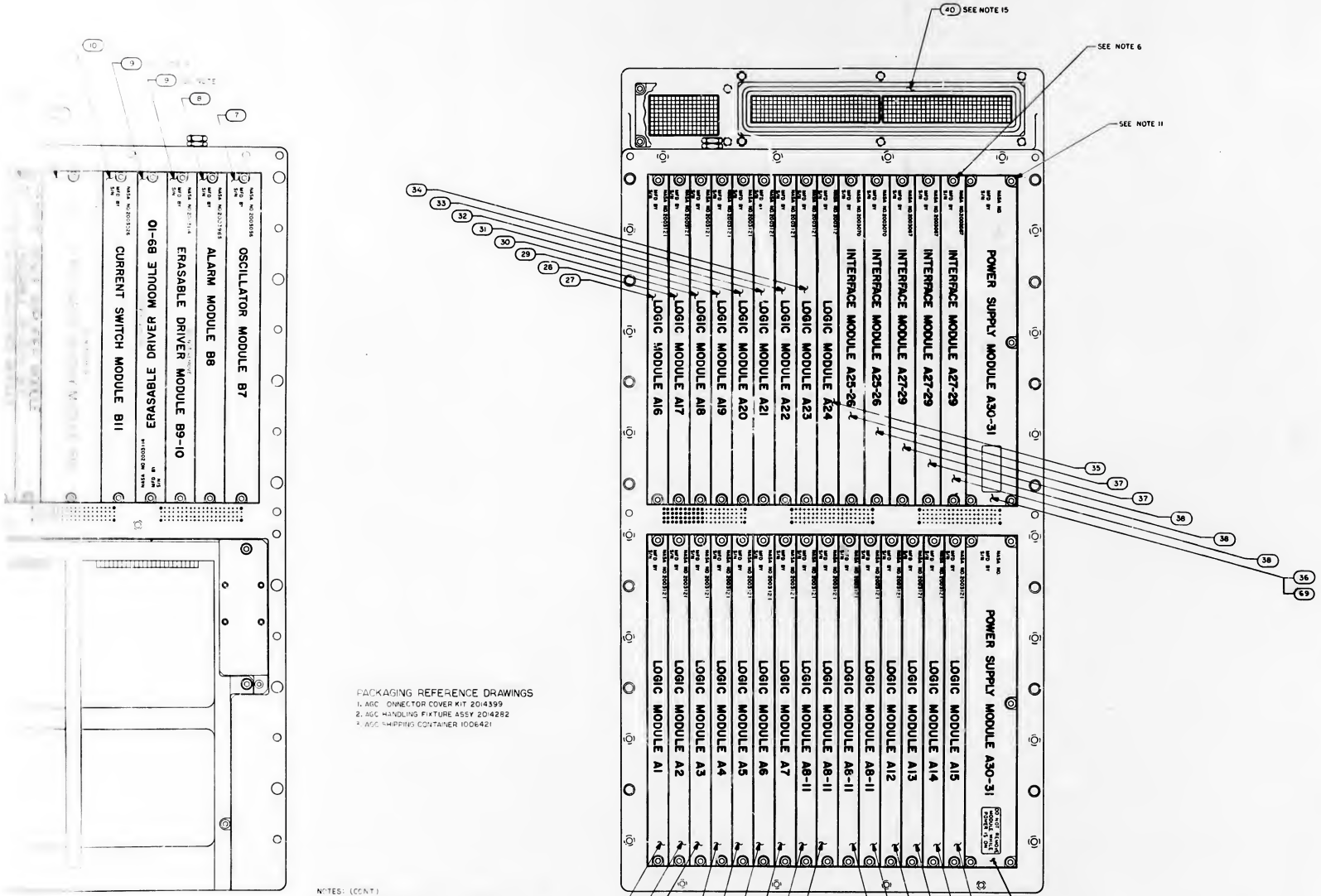

PACKAGING REFERENCE DRAWINGS
1. AGC CONNECTOR COVER KIT 2014399
2. AGC HANDLING FIXTURE ASSY 2014282
3. AGC SHIPPING CONTAINER 1006421

NOTES: (CONT.)
23. SHIM, AS REQUIRED, PRIOR TO ASSY OF FIND NO. 6, SURFACE C TO WITHIN ±.002 OF SURFACE B USING FIND NO. 72, NOT TO INCLUDE .004 REF DIMENSION OF FIND NO. 72
24. SHIM, AS REQUIRED, PRIOR TO ASSY OF FIND NO. 6, SURFACE C TO WITHIN ±.002 OF SURFACE B USING FIND NO. 71

QTY REQD	PART OR IDENTIFYING NO	NOMENCLATURE OR DESCRIPTION	FIND NO
		LIST OF MATERIALS	

NEXT ASSY	USED ON	APPLICATION

UNLESS OTHERWISE SPECIFIED DIMENSIONS ARE IN INCHES. CAPACITOR VALUES ARE IN μf RESISTOR VALUES ARE IN OHMS TOLERANCES ON FRACTIONS DECIMALS ANGLES ± ± ± DO NOT SCALE THIS DRAWING MATERIAL

MIT INSTRUMENTATION LAB CAMBRIDGE MASS

DRAWN CHECKED APPROVED APPROVED APPROVED CLD APPROVED QDC DATE

MANNED SPACECRAFT CENTER HOUSTON, TEXAS

COMPUTER ASSEMBLY

CODE IDENT NO 80230 | SIZE J | DRAWING NO 2 03382

SCALE 1/1 | SHEET 2 OF 2

CHART A SEE NOTES 36 & 37			
PART NO. FOR CIR 8 CIR CONFIGURATION		PART NO. FOR CIR 0 CIR CONFIGURATION	MODULES
2003282	-011	2003884	-011	LOGIC MODULE A1
	-021		-021	A2
	-031		-031	A3
	-041		-041	A4
	-051		-051	A5
	-061		-061	A6
	-071		-071	A7
	-081		-081	A8-A11
	-091		-091	A12
	-111		-111	A13
	-121		-121	A14
	-131		-131	A15
	-141		-141	A16
	-151		-151	A17
	-161		-161	A18
	-171		-171	A19
	-181		-181	A20
	-191		-191	A21
	-211		-211	A22
	-221		-221	A23
	-231		-231	LOGIC MODULE A24

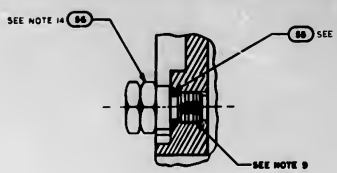

PARTIAL SECTION F F
SCALE: 2/1

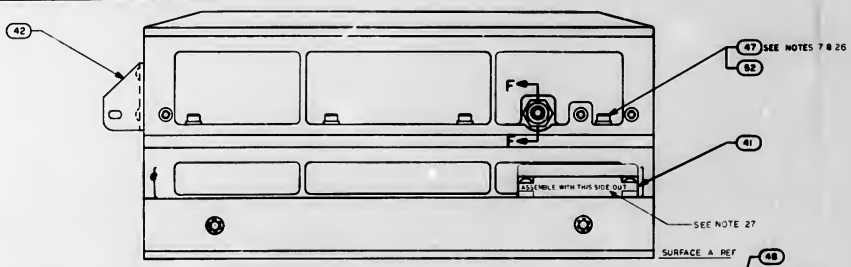

VIEW B-B

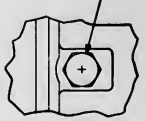

VIEW E-E

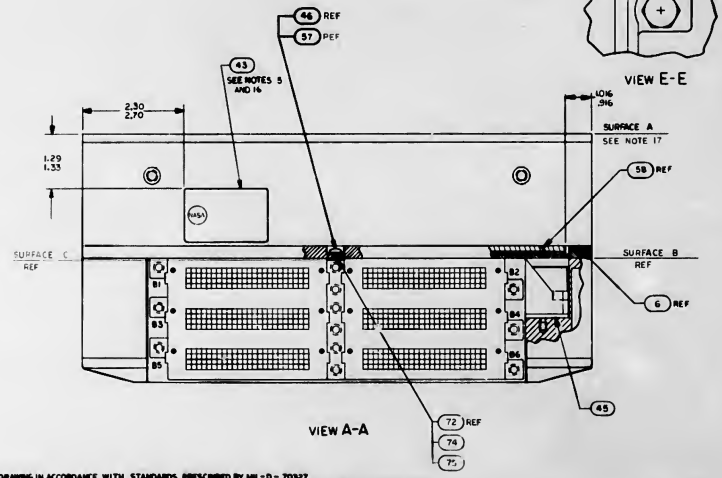

VIEW A-A

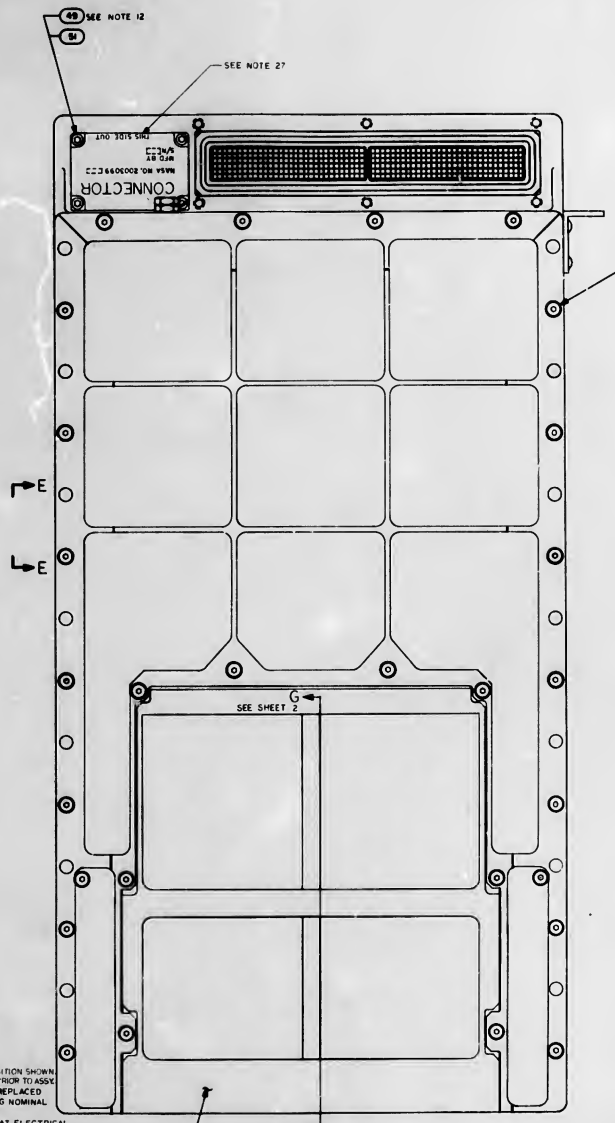

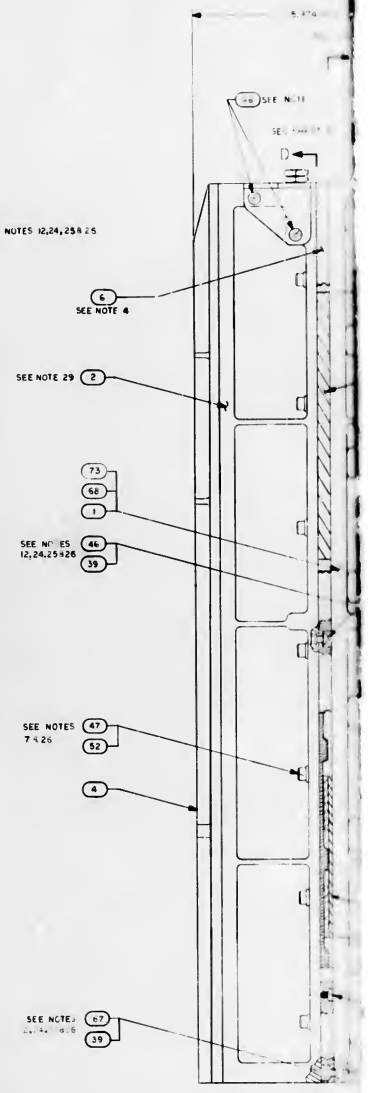

NOTES:

1. INTERPRET DRAWING IN ACCORDANCE WITH STANDARDS PRESCRIBED BY MIL-D-70327
2. PHANTOM LINES DENOTE AGE COLDPLATE AND HANDLING FIXTURE TO BE SUPPLIED BY NORTH AMERICAN AVIATION, INC
3. ADD SILICONE COMPOUND 1006439 TO MODULE MATING METAL SURFACES AND TRAY MATING SURFACES
4. ASSEMBLE FIND NO. 53 AND FIND NO. 63 TO FIND NO. 6 AND FIND NO. 6 TO FIND NO. 2 PRIOR TO ASSEMBLY OF FIND NO. 2 TO FIND NO. 1 OR FIND NO. 68 OR FIND NO. 73
5. BOND FIND NO. 43 TO FIND NO. 1 OR FIND NO. 68 OR FIND NO. 73 PER ND1002004 TYPE IV
6. UNLESS OTHERWISE SPECIFIED TORQUE ALL MODULE MOUNTING SCREWS 15/19 INCH POUNDS
7. TORQUE FIND NO. 47 TO 28/32 INCH POUNDS
8. FINISH IS REQUIRED TO SATISFY ICD GAEC 510-10001
9. APPLY SEALING COMPOUND MIL-S-22473 GRADE H TO FIND NO. 53, FIND NO. 56 AND FIND NO. 44
10. COMPLETED ASSEMBLY SHALL BE TESTED IN ACCORDANCE WITH AND SHALL MEET ALL THE REQUIREMENTS OF PS206007
11. TORQUE FOR FIND NO. 36 AND FIND NO. 69 MOUNTING SCREWS TO BE 4/6 INCH POUNDS
12. TORQUE FOR FIND NO. 46, 49, 50 AND 67 TO BE 18/22 INCH POUNDS
13. TORQUE FOR FIND NO. 53 TO BE 4/6 INCH POUNDS
14. TORQUE FOR FIND NO. 44 AND FIND NO. 56 TO BE 137/157 INCH POUNDS
15. FIND NO. 40 SHALL BE SUPPLIED AS PART OF THIS ASSEMBLY
16. MARK COMPUTER ASSEMBLY AND RELATED PART NO., APPLICABLE DASH NO., SERIAL NO. AND CONTRACT NO. PER 1004260 AND SERIALIZE PER ND1002023
17. FINISH SURFACE [A] PER ICD NAA MMO1-01302-116 THIS ASSEMBLY MUST BE CAPABLE OF MEETING ELECTRICAL BONDING REQUIREMENTS OF ICD NAA MMO1-01302-116
18. BOND FIND NO. 58 TO FIND NO. 6 IN POSITION SHOWN USING 1006336, CURE AT ROOM TEMP 24 HRS PRIOR TO ASSY.
19. REFERENCED MODULES MUST NOT BE REPLACED OR INTERCHANGED WITHOUT REPEATING NOMINAL SELECTION PROCEDURE PER NOTE 10
20. THE VALUE OF C1 TO BE DETERMINED AT ELECTRICAL TEST AND SELECTED FROM APPROPRIATE CHART
21. WHEN THE VALUE OF C1 IS ZERO NO COMPONENT SHALL BE USED
22. ENCAPSULATE AREA SHOWN AFTER SELECTION AND INSTALLATION OF C1 USING ND1002009 METHOD C OR D USING PRIMER PER SCD102513
23. WELD PER ND1002005
24. ASSEMBLE HARDWARE WITH SMOOTH FACE OF FIND NO. 39 IN CONTACT WITH SCREW HEAD
25. FIND NO. 39, 48, 55 & 57 TO BE DISCARDED AND REPLACED WITH NEW PARTS EACH TIME THEY ARE DISASSEMBLED
26. SEAL EXPOSED HARDWARE ASSEMBLIES WITH .002 MIN THICK COATING OF FIND NO. 66. OVERALL COMPUTER ASSEMBLY DIMENSIONS SHALL NOT BE EXCEEDED. CURE AT ROOM TEMP 24 HRS
27. STENCILING SHOWN FOR ORIENTATION ONLY
28. KEEP ALL MATING THREADS OF SCREWS, TRAY AND MID SPACER INSERTS FREE OF SILICONE COMPOUND
29. FILL FEMALE INSULATORS OF 841 AND 842 CONNECTORS USING FIND NO. 70 PRIOR TO ASSEMBLY OF FIND NO. 5 TO FIND NO. 2
30. FIND NO. 12 ERASEABLE MEMORY, SENSE AMPLIFIER MODULE USE EITHER 2003982-021 OR 2013982-031
31. FIND NO. 62 FIXED MEMORY, SENSE AMPLIFIER MODULE USE EITHER 2013981-021 OR 2013981-031
32. BOND FIND NO. 72 ALONG EDGES TO FIND NO. 5 PER ND1002004, TYPE IV PRIOR TO ASSEMBLY OF FIND NO. 6
33. SEE SHEET 2
34. SEE SHEET 2
35. SEE SHEET 2
36. SEE SHEET 2
37. SEE SHEET 2
38. SEE SHEET 2

2003 G

REVISIONS					
SYM	ZONE	DESCRIPTION	DR	CHK	DATE	APPROVED
A		INITIAL RELEASE TORR 32963				
B		REVISED PER TORR 32963				
C		REVISED PER TORR 33[illegible]				
D		REVISED PER TORR [illegible]				
E						
F		REVISED PER TORR 33635				
6		REVISED PER TORR 34265				

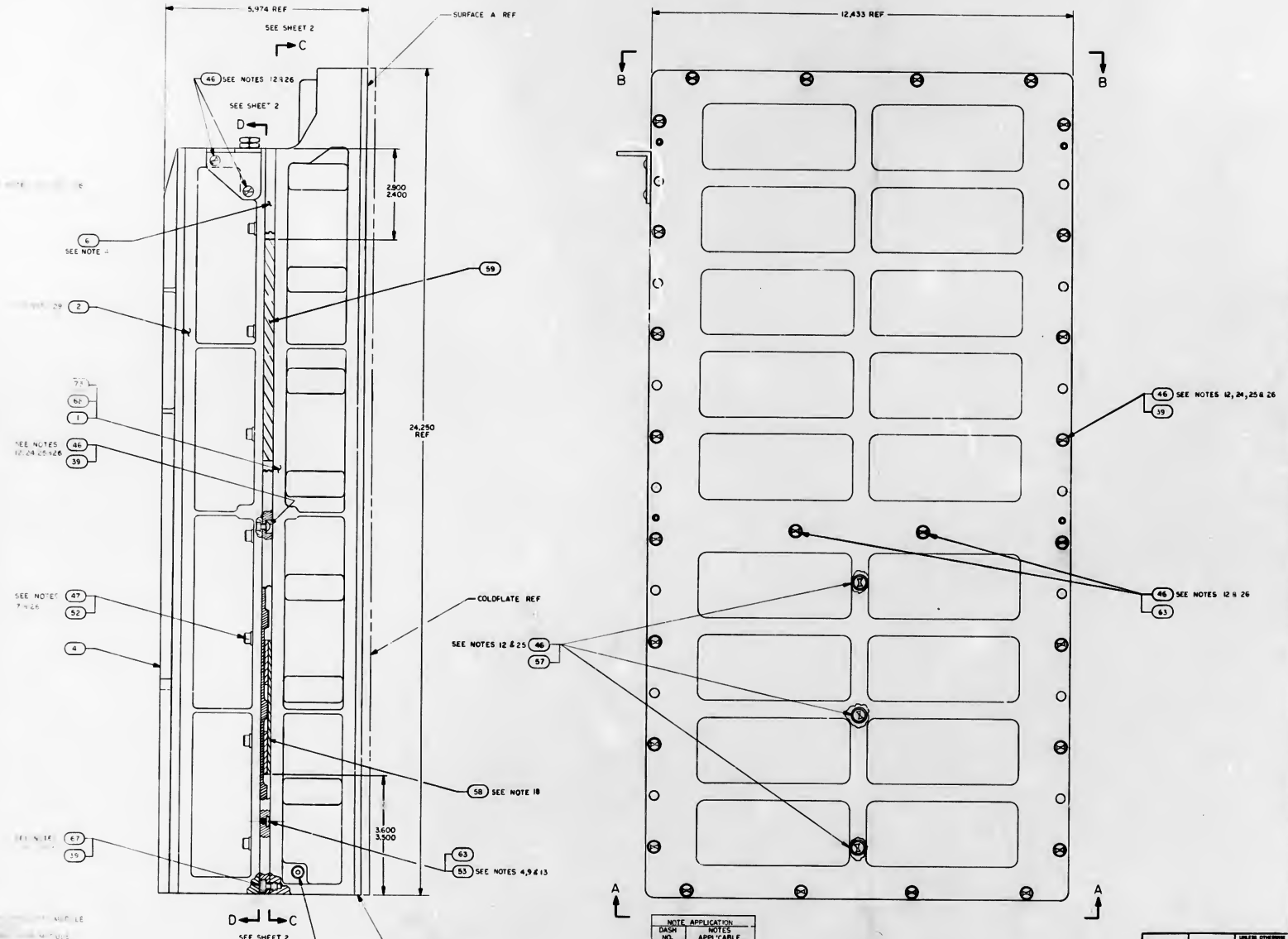

NOTE APPLICATION	
DASH NO.	NOTES APPL'CABLE
-011	1 THRU 34 & 37
-021	1 THRU 35, 37 & 38
-031	1 THRU 31 & 36

AR	—	—	2004895-002	SHIM AGC		76
AR	—	—	2004895-001	SHIM AGC		74
1	—	—	2003092-041	TRAY A WIRED ASSY		73
—	AR	AR	2[illegible]	SHIM AGC		72
—	AR	AR	2[illegible]-006	SHIM		71
			2005944	AGC WIRE LIST		6[illegible]
AR	AR	AR	MIL-S-8660	SILICONE COMPOUND		70
2	2	—	2003692-011	POWER SUPPLY MODULE A30-31		69
—	1	—	SEE NOTE 35	TRAY "A" WIRED ASSY		68
33	33	33	2004732-002	SCREW, COATED		67
AR	AR	AR	1006338-000	SEALING COMPOUND, SILICONE RUBBER		66
AR	AR	AR	1006776-22	INSULATION, SLEEVING ELECTRICAL		65
1	1	1	SEE NOTE 20	CAPACITOR		64
10	10	10	2004148-007	WASHER, FLAT		63
1	1	1	[illegible] NOTE 31	SENSE AMPLIFIER MODULE, FIXED MEMORY B14		62
—	AR	AR	2004895-003	SHIM AGC		61
—	AR	AR	2004895-001	SHIM AGC		60
1	1	1	2004899-001	PAD VIBRATION		59
1	1	1	2003970	VIBRATION PAD ASSY		58
4	4	4	NAS1598-008N	WASHER, SEALING		57
1	1	1	2018773	VALVE PRESSURE ASSEMBLY		56
1	1	1	1000159-5	PACKING, PREFORMED "O" RING		55
2	2	2	2004984-001	WASHER, FLAT		54
8	8	8	2004139	PAD, THREADED		53
18	18	18	2004894-014	WASHER, FLAT		52
4	4	4	2004894-012	WASHER, FLAT		51
2	2	2	1001489-36	SCREW, HEX SOCKET HEAD		50
4	4	4	1004722-2	SCREW, CAPTIVE		49
1	1	1	1000159-7	PACKING, PREFORMED "O" RING		48
18	18	18	2004732-003	SCREW, COATED		47
33	33	33	2004732-001	SCREW, COATED		46
2	2	2	1006347	GASKET, PLATE		45
1	1	1	2004986	PLUG, MACHINE THREAD		44
1	1	1	1004260-19	NAME PLATE, TYPE II		43
1	1	1	2004113-001	BRACKET, CABLE		42
1	1	1	2003099-011	CONNECTOR ASSEMBLY		41
1	1	1	1006380	GASKET, RETAINED		40
58	58	58	2004707	WASHER, KNURLED		39
3	3	3	2003067-041	INTERFACE MODULE A27-29		38
2	2	2	2003070-031	INTERFACE MODULE A25-26		37
—	—	2	2003887-011	POWER SUPPLY MODULE A30-31		36
1	1	1	SEE NOTE 34 & 17	LOGIC MODULE A24		35
1	1	1		LOGIC MODULE A23		34
1	1	1		LOGIC MODULE A22		33
1	1	1		LOGIC MODULE A21		32
1	1	1		LOGIC MODULE A20		31
1	1	1		LOGIC MODULE A19		30
1	1	1		LOGIC MODULE A18		29
1	1	1		LOGIC MODULE A17		28
1	1	1		LOGIC MODULE A16		27
1	1	1		LOGIC MODULE A15		26
1	1	1		LOGIC MODULE A14		25
1	1	1		LOGIC MODULE A13		24
1	1	1		LOGIC MODULE A12		23
4	4	4		LOGIC MODULE A8-11		22
1	1	1		LOGIC MODULE A7		21
1	1	1		LOGIC MODULE A6		20
1	1	1		LOGIC MODULE A5		19
1	1	1		LOGIC MODULE A4		18
1	1	1		LOGIC MODULE A3		17
1	1	1		LOGIC MODULE A2		16
1	1	1	SEE NOTES 34 & 17	LOGIC MODULE A1		15
2	2	2	2003140-031	ROW DRIVER MODULE B16-17		14
1	1	1	2003027-031	STRAND SELECT MODULE B15		13
1	1	1	SEE NOTE 10	SENSE AMPL MOD, ERASABLE MEMORY B13		12
1	1	1	2003111-021	ERASABLE MEMORY MODULE B12		11
1	1	1	2003026-031	CURRENT SWITCH MODULE B11		10
2	2	2	2003114-021	ERASABLE DRIVER MODULE B9-10		9
1	1	1	2003[illegible]3-021	ALARM MODULE B8		8
1	1	1	2003036-031	OSCILLATOR MODULE B7		7
1	1	1	2003978-001	MID SPACER		6
1	1	1	2003059-021	INTERCONNECTION HEADER ASSEMBLY		5
1	1	1	2003976-011	TRAY B COVER		4
1	1	1	2003977-011	TRAY A COVER		3
1	1	1	2003093-021	TRAY B WIRED ASSEMBLY		2
—	—	1	2003092-031	TRAY A WIRED ASSEMBLY		1
QTY REQD (-011)	QTY REQD (-021)	QTY REQD (-031)	PART OR IDENTIFYING NO	NOMENCLATURE OR DESCRIPTION		FIND NO

LIST OF MATERIALS

UNLESS OTHERWISE SPECIFIED DIMENSIONS ARE IN INCHES
CAPACITOR VALUES ARE IN μf
RESISTOR VALUES ARE IN OHMS
TOLERANCES ON
FRACTIONS DECIMALS ANGLES
± — ± —
DO NOT SCALE THIS DRAWING

MATERIAL —

2003991
NEXT ASSY USED ON
APPLICATION

MIT INSTRUMENTATION LAB CAMBRIDGE MASS

MANNED SPACECRAFT CENTER
HOUSTON TEXAS

COMPUTER ASSEMBLY

CODE IDENT NO 80230 SIZE J DRAWING NO 2003993

SCALE 1/2 SHEET 1 OF 2

C1	
PART NO.	VALUE UUF
1006777-1	0
-15	150
-18	330
-20	470
-22	680
1006777-23	820
SEE NOTE 21	0
1006777-16	220
1006777-17	270

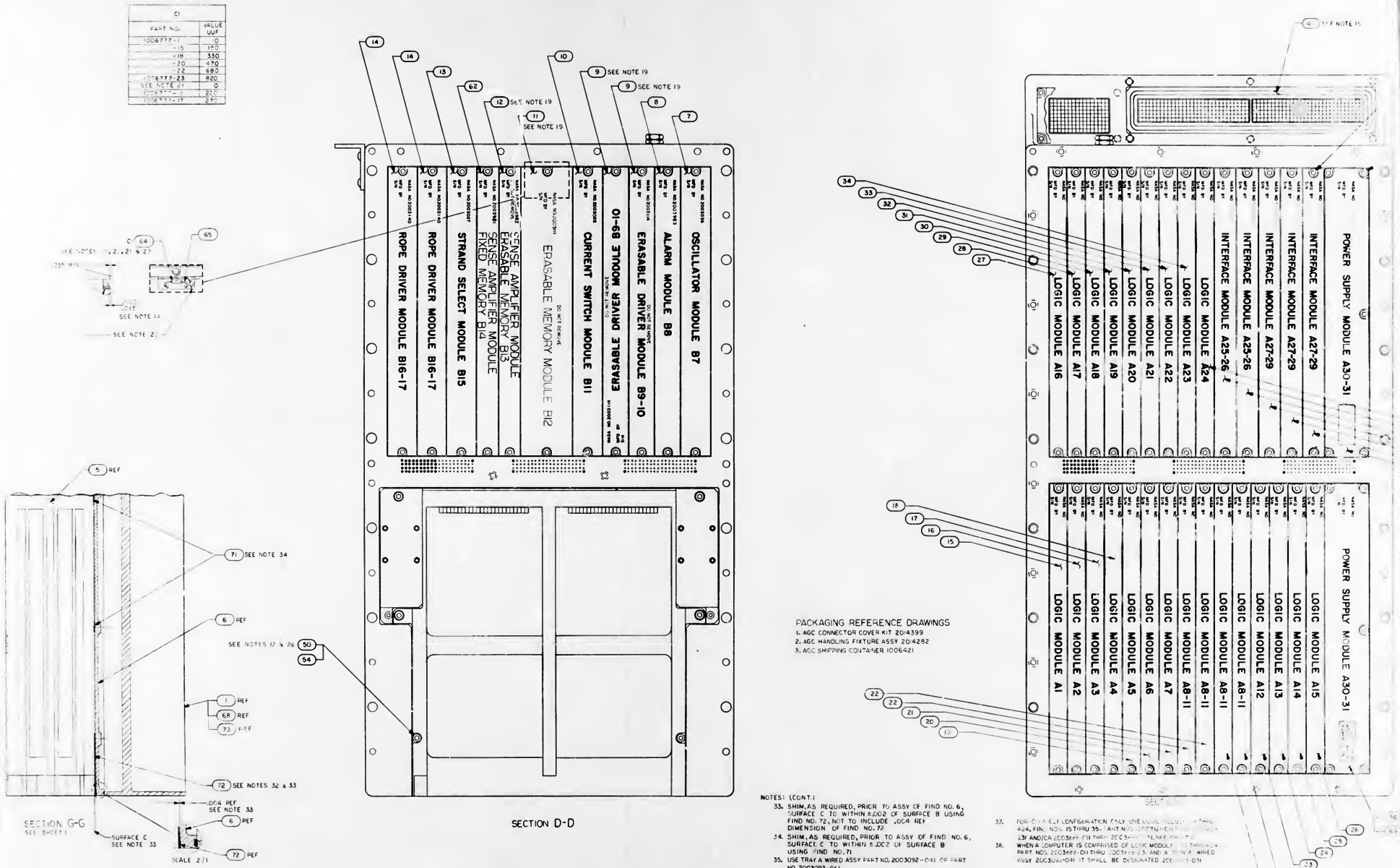

NOTES: (CONT.)

33. SHIM, AS REQUIRED, PRIOR TO ASSY OF FIND NO. 6, SURFACE C TO WITHIN ±.002 OF SURFACE B USING FIND NO. 72, NOT TO INCLUDE .004 REF DIMENSION OF FIND NO. 72
34. SHIM, AS REQUIRED, PRIOR TO ASSY OF FIND NO. 6, SURFACE C TO WITHIN ±.002 OF SURFACE B USING FIND NO. 71
35. USE TRAY A WIRED ASSY PART NO. 2003092-041 OR PART NO. 2003092-061
36. FOR -031 CONFIGURATION ONLY USE LOGIC MODULE [illegible] THRU A24 PART NOS. 2003888-011 THRU 2003888-231, SEE CHART 'A'
37. FOR -[illegible] CONFIGURATION ONLY USE LOGIC MODULE [illegible] THRU A24, FIN. NOS. 15 THRU 35. PART NOS. [illegible] 231 AND/OR 2003888-011 THRU 2003888-[illegible] SEE CHART 'A'
38. WHEN A COMPUTER IS COMPRISED OF LOGIC MODULE [illegible] THRU A24 PART NOS. 2003888-011 THRU 2003888-231 AND A TRAY A WIRED ASSY 2003092-041 IT SHALL BE DESIGNATED 2003[illegible]-031

2003993 G

REVISIONS					
SYM	ZONE	DESCRIPTION	BY	CHK	DATE / APPROVED
A		INIT. RELEASE TRW 31518			
B		RELEASED PER TDRR 32985			
C		REVISED PER TDRR 33 [illegible]			
D		REVISED PER TDRR 33 [illegible]			
E					
F		REVISED PER TDRR 33 [illegible]			
G		REVISED PER TDRR 34265			

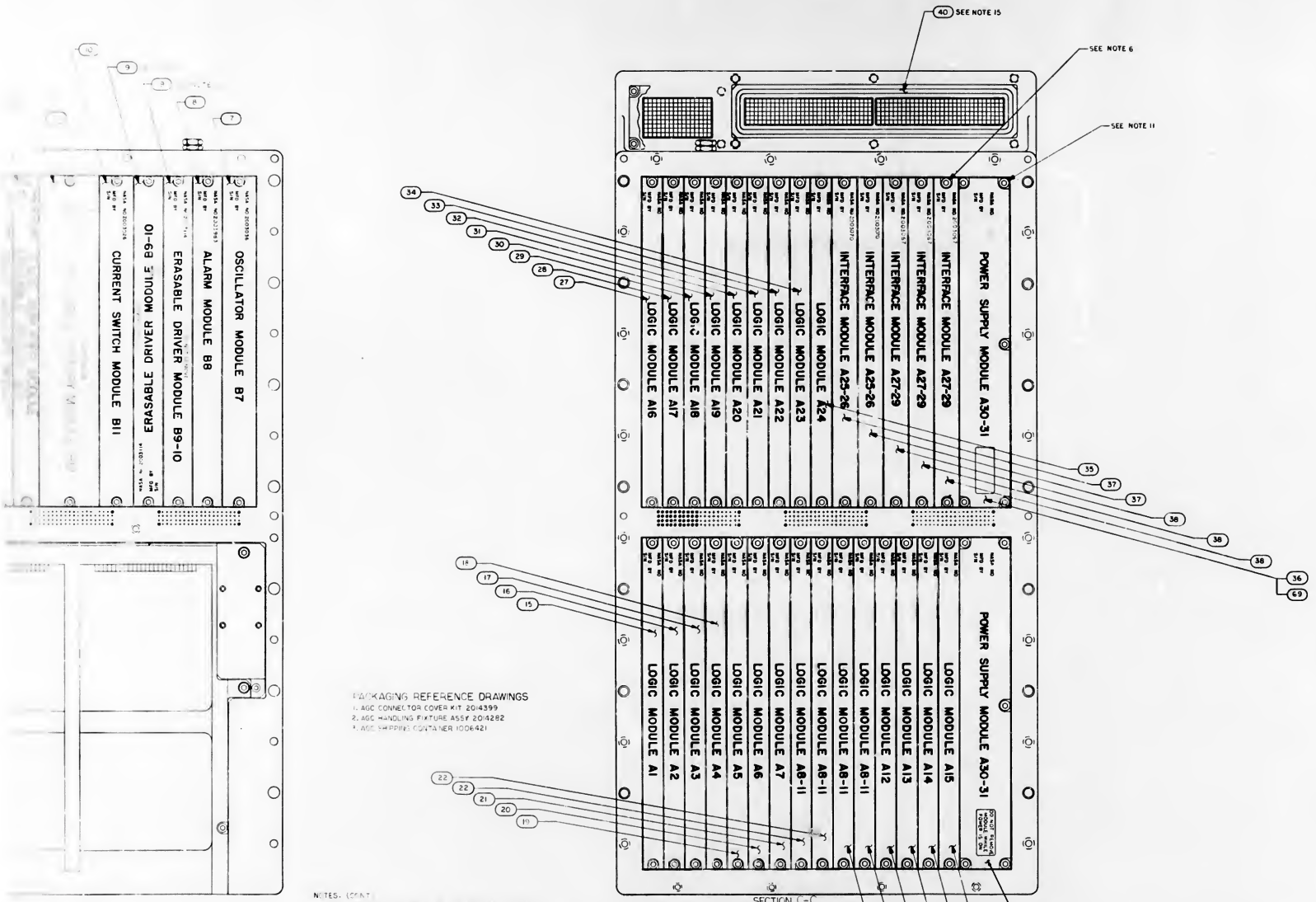

PACKAGING REFERENCE DRAWINGS
1. AGC CONNECTOR COVER KIT 2014399
2. AGC HANDLING FIXTURE ASSY 2014282
3. AGC SHIPPING CONTAINER 1006421

NOTES. (CONT.)

33. SHIM AS REQUIRED, PRIOR TO ASSY OF FIND NO. 6, SURFACE C TO WITHIN ±.002 OF SURFACE B USING FIND NO. 72, NOT TO INCLUDE .004 REF DIMENSION OF FIND NO. 72
34. SHIM AS REQUIRED, PRIOR TO ASSY OF FIND NO. 6, SURFACE C TO WITHIN ±.002 OF SURFACE B USING FIND NO. 71
35. USE TRAY A WIRED ASSY PART NO. 2003092-041 OR PART NO. 2003092-061
36. FOR -011 CONFIGURATION ONLY USE LOGIC MODULE A1 THRU A24 PART NOS. 2003868-011 THRU 2003868-231, SEE CHART 'A'
37. FOR -011 & -021 CONFIGURATION ONLY USE LOGIC MODULE A1 THRU A24, FIND NOS. 15 THRU 35, PART NOS. 2003121-011 THRU 2003121-231 AND/OR 2003868-011 THRU 2003868-231, SEE CHART 'A'
38. WHEN A COMPUTER IS COMPRISED OF LOGIC MODULES A1 THRU A24, PART NOS. 2003868-011 THRU 2003868-231 AND A TRAY 'A' WIRED ASSY 2003092-041 IT SHALL BE DESIGNATED 2003993-031

QTY REQD	PART OR IDENTIFYING NO	NOMENCLATURE OR DESCRIPTION	FIND NO
		LIST OF MATERIALS	

UNLESS OTHERWISE SPECIFIED DIMENSIONS ARE IN INCHES
CAPACITOR VALUES ARE IN μf
RESISTOR VALUES ARE IN OHMS
TOLERANCES ON
FRACTIONS DECIMALS ANGLES
± ± ±
DO NOT SCALE THIS DRAWING
MATERIAL

NEXT ASSY | USED ON
APPLICATION

MIT INSTRUMENTATION LAB CAMBRIDGE MASS

DRAWN
CHECKED
APPROVED
APPROVED

MANNED SPACECRAFT CENTER
HOUSTON TEXAS

COMPUTER ASSEMBLY

CODE IDENT NO 80230 | SIZE J | DRAWING NO 2003999

DATE | SCALE 1/1 | SHEET | OF 2

CHART A SEE NOTES 36 & 37				
PART NO. FOR -011 & -021 CONFIGURATION		PART NO. FOR -011 & -021 CONFIGURATION		MODULES
2003121	-011	2003888	-011	LOGIC MODULE A1
↓	-021	↓	-021	A2
	-031		-031	A3
	-041		-041	A4
	-051		-051	A5
	-061		-061	A6
	-071		-071	A7
	-081		-081	A8-A11
	-091		-091	A12
	-111		-111	A13
	-121		-121	A14
	-131		-131	A15
	-141		-141	A16
	-151		-151	A17
	-161		-161	A18
	-171		-171	A19
	-181		-181	A20
	-191		-191	A21
	-211		-211	A22
↑	-221	↑	-221	A23
2003121	-231	2003888	-231	LOGIC MODULE A24

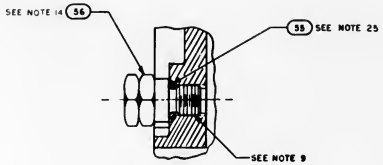

PARTIAL SECTION F F
SCALE: 2/1

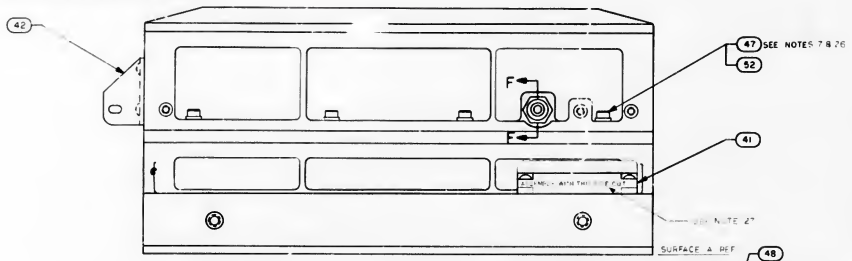

VIEW B-B

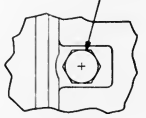

VIEW E-E

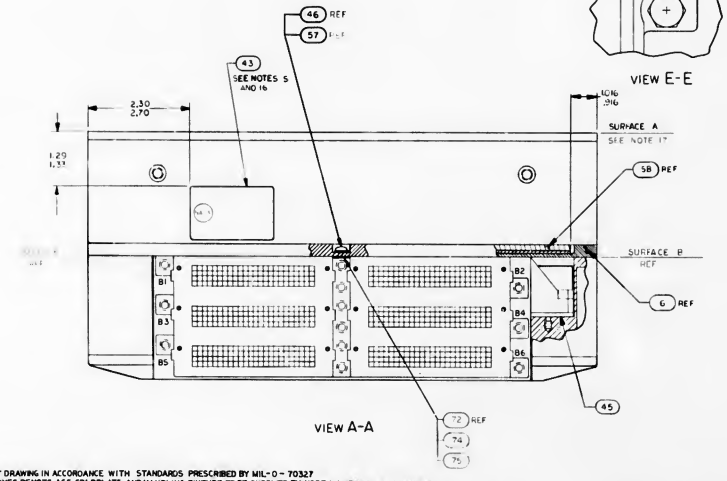

VIEW A-A

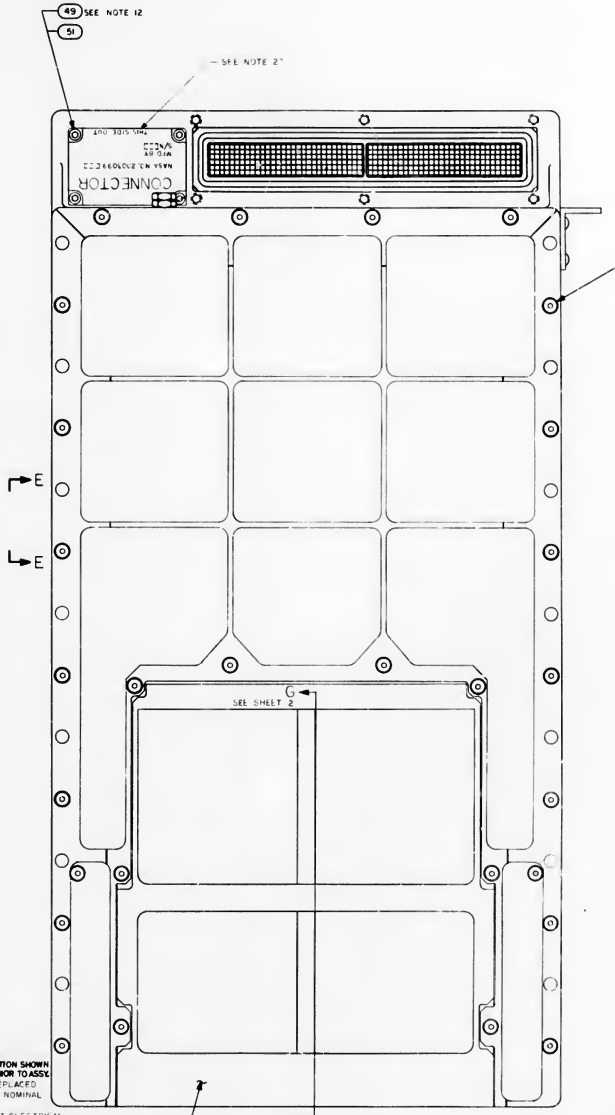

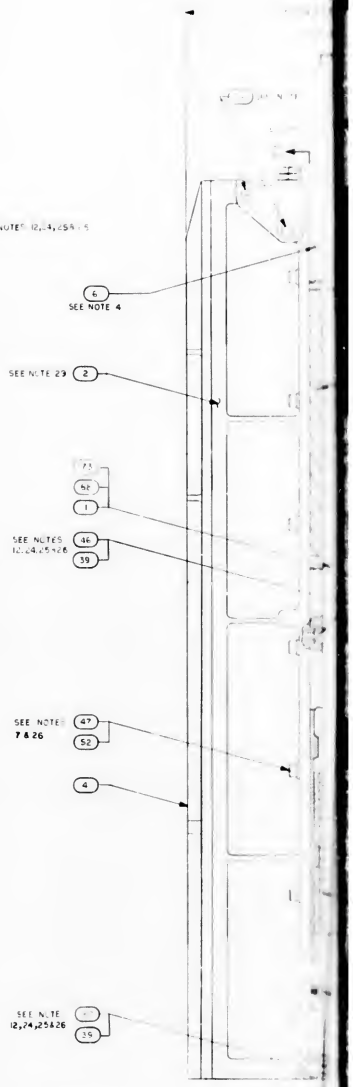

NOTES:

1. INTERPRET DRAWING IN ACCORDANCE WITH STANDARDS PRESCRIBED BY MIL-D-70327
2. PHANTOM LINES DENOTE AGC COLDPLATE AND HANDLING FIXTURE TO BE SUPPLIED BY NORTH AMERICAN AVIATION, INC
3. ADD SILICONE COMPOUND ID06879 TO MODULE MATING METAL SURFACES AND TRAY MATING SURFACES
4. ASSEMBLE FIND NO.53 AND FIND NO.63 TO FIND NO.6 AND FIND NO.6 TO FIND NO.2 PRIOR TO ASSEMBLY OF FIND NO.2 TO FIND NO.1 OR FIND NO.68 OR FIND NO.73
5. BOND FIND NO.43 TO FIND NO.1 CR FIND NO.68 CR FIND NO.73 PER ND10020C4 TYPE IV
6. UNLESS OTHERWISE SPECIFIED TORQUE ALL MODULE MOUNTING SCREWS 15/19 INCH POUNDS
7. TORQUE FIND NO.47 TO 28/32 INCH POUNDS
8. FINISH IS REQUIRED TO SATISFY ICD GAEC 510-10001
9. APPLY SEALING COMPOUND MIL-S-22473 GRADE H TO FIND NO.53, FIND NO.56 AND FIND NO.44
10. COMPLETED ASSEMBLY SHALL BE TESTED IN ACCORDANCE WITH AND SHALL MEET ALL THE REQUIREMENTS OF PS201600?
11. TORQUE FOR FIND NO.36 AND FIND NO.69 MOUNTING SCREWS TO BE 4/6 INCH POUNDS
12. TORQUE FOR FIND NO.46, 49, 50 AND 67 TO BE 18/22 INCH POUNDS
13. TORQUE FOR FIND NO.53 TO BE 4/6 INCH POUNDS
14. TORQUE FOR FIND NO.44 AND FIND NO.56 TO BE 137/157 INCH POUNDS
15. FIND NO.40 SHALL BE SUPPLIED AS PART OF THIS ASSEMBLY
16. MARK COMPUTER ASSEMBLY AND RELATED PART NO., APPLICABLE DASH NO., SERIAL NO. AND CONTRACT NO. PER 1004260 AND SERIALIZE PER ND10020D23
17. FINISH SURFACE [A] PER ICD NAA MH01-01302-116 THIS ASSEMBLY MUST BE CAPABLE OF MEETING ELECTRICAL BONDING REQUIREMENTS OF ICD NAA MH01-01302-116
16. BOND FIND NO.58 TO FIND NO.6 IN POSITION SHOWN USING ID06338 CURE AT ROOM TEMP 24 HRS PRIOR TO ASSY.
19. NEW MODULES MUST NOT BE REPLACED OR INTERCHANGED WITHOUT REPEATING NOMINAL SELECTION PROCEDURE PER NOTE 10
20. THE VALUE OF C1 TO BE DETERMINED AT ELECTRICAL TEST AND SELECTED FROM APPROPRIATE CHART
21. WHEN THE VALUE OF C1 IS ZERO NO COMPONENT SHALL BE USED
22. ENCAPSULATE AREA SHOWN AFTER SELECTION AND INSTALLATION OF C1 USING ND10020D9 METHOD C OR D USING PRIMER PER SCD10125B
23. WELD PER ND10020D5
24. ASSEMBLE HARDWARE WITH SMOOTH FACE OF FIND NO. 39 IN CONTACT WITH SCREW HEAD
25. FIND NO.39, 46, 55 & 57 TO BE DISCARDED AND REPLACED WITH NEW PARTS EACH TIME THEY ARE DISASSEMBLED
26. SEAL EXPOSED HARDWARE ASSEMBLIES WITH .002 MIN THICK COATING OF FIND NO.66. OVERALL COMPUTER ASSEMBLY DIMENSIONS SHALL NOT BE EXCEEDED CURE AT ROOM TEMP 24 HRS
27. STENCILING SHOWN FOR ORIENTATION ONLY
28. KEEP ALL MATING THREADS OF SCREWS, TRAY AND MID SPACER INSERTS FREE OF SILICONE COMPOUND
29. FILL FEMALE INSULATORS OF B41 AND B42 CONNECTORS USING FIND NO.70 PRIOR TO ASSEMBLY OF FIND NO.5 TO FIND NO.2
31. [illegible] FIND NO. 2 REPLACEABLE MEMBER [illegible] USE EITHER [illegible]
32. BEND FIND NO. [illegible] ALONG EDGE [illegible] PER ND TYPE 2 PRIOR TO ASSEMBLY OF FIND NO. [illegible]
33. SEE SHEET 2
34. SEE SHEET 2
35. SEE SHEET 2
36. SEE SHEET 2
37. SEE SHEET 2
38. SEE SHEET 2
39. SEE SHEET 2
40. SEE SHEET 2
41. SEE SHEET 2
42. SEE SHEET 2

2003193

REVISIONS						
SYM	ZONE	DESCRIPTION	DR	CHK	DATE	APPROVED
A		INITIAL RELEASE TDRR 32558				
B		REVISED PER TDRR 32965				
C		REVISED PER TDRR [illegible]				
D		REVISED PER TDRR [illegible]				
E		[illegible]				
F		REVISED PER TDRR 33636				
6		REVISED PER TDRR 34265	SA			
H		REVISED PER TDRR 34[illegible]5				

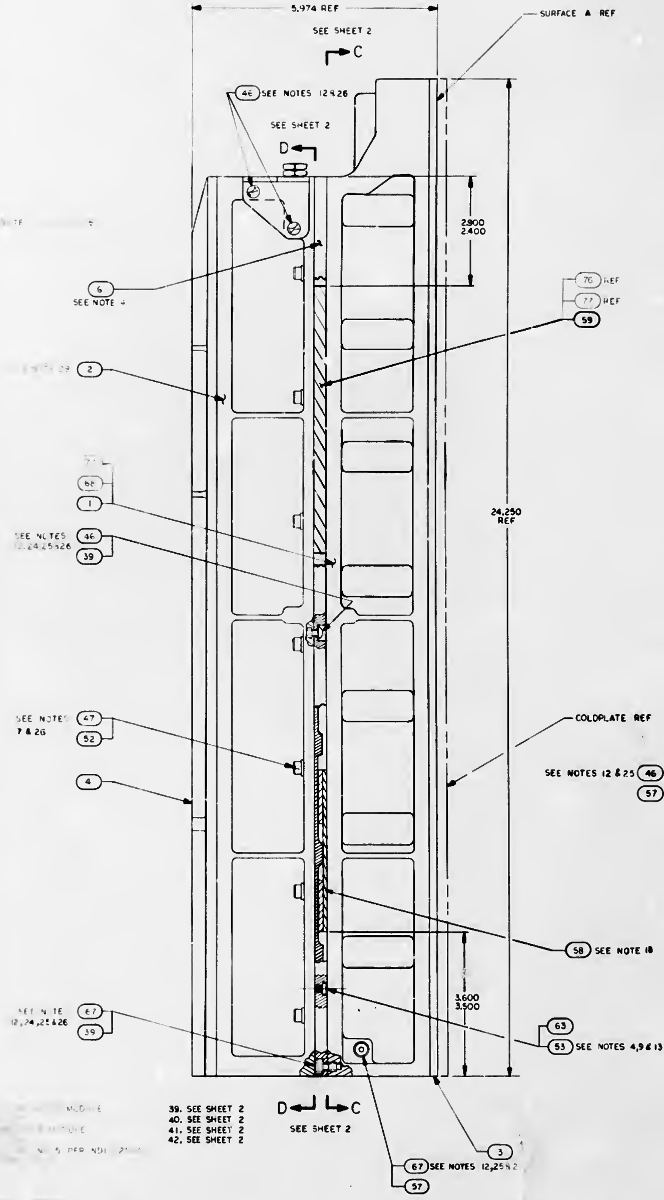

39. SEE SHEET 2
40. SEE SHEET 2
41. SEE SHEET 2
42. SEE SHEET 2

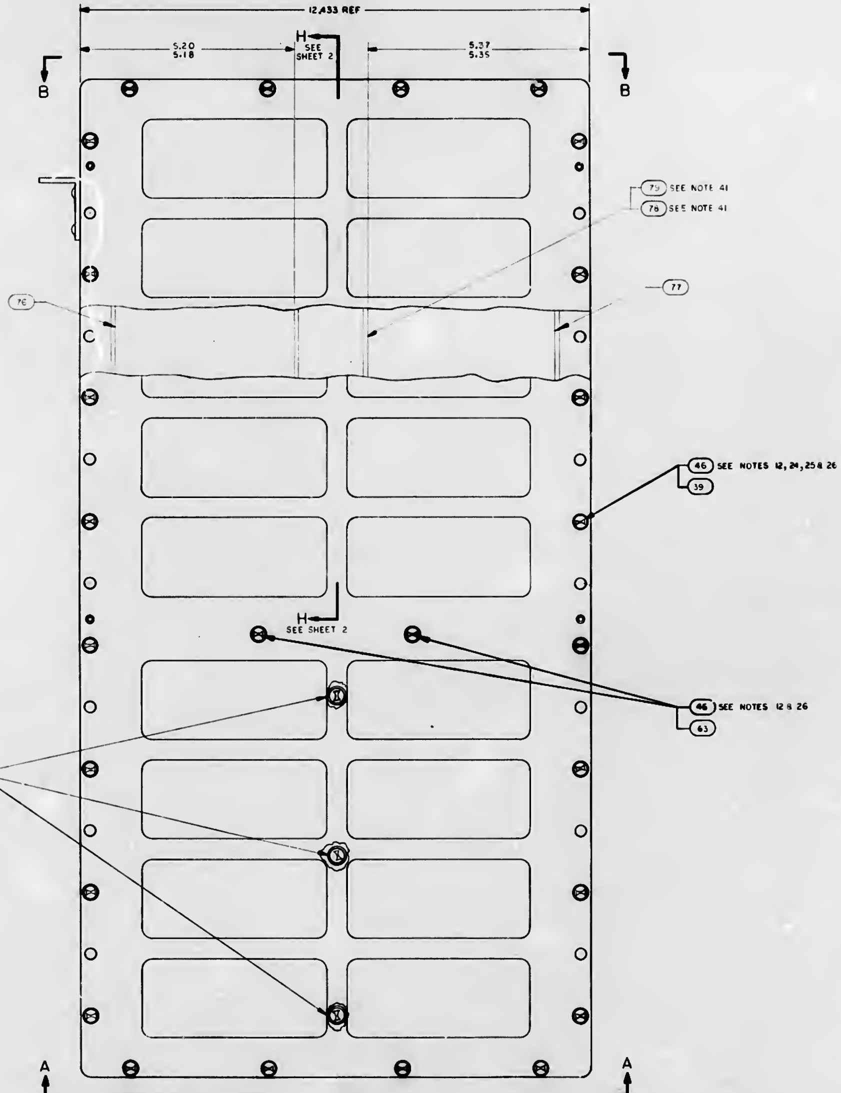

NOTE APPLICATION	
DASH NO.	NOTES APPLICABLE
-011	1 THRU 34 & 37
-021	1 THRU 35,37 & 38
-031	1 THRU 31 & 36 & 39 THRU 42

QTY REQD -031	QTY REQD -021	QTY REQD -011	PART OR IDENTIFYING NO	NOMENCLATURE OR DESCRIPTION	FIND NO
1	—	—	2004691	SHIM VIBRATION DAMPENING	79
1	—	—	2004690	PAD VIBRATION DAMPENING	78
1	—	—	2004899-007	PAD VIBRATION	77
1	—	—	2004899-006	PAD VIBRATION	76
AR	—	—	2004895-002	SHIM AGC	75
AR	—	—	2004895-001	SHIM AGC	74
1	—	—	2003092-041	TRAY A WIRED ASSY	73
—	AR	AR	2010801	SHIM AGC	72
—	AR	AR	2010800-000	SHIM	71
			2005944	AGC WIRE LIST	[illegible]
AR	AR	AR	MIL-S-8660	SILICONE COMPOUND	70
2	2	—	2003892-011	POWER SUPPLY MODULE A30-31	69
—	1	—	SEE NOTE 35	TRAY "A" WIRED ASSY	68
33	33	33	2004732-002	SCREW, COATED	67
AR	AR	AR	1006338-000	SEALING COMPOUND, SILICONE RUBBER	66
AR	AR	AR	1006776-22	INSULATION, SLEEVING ELECTRICAL	65
1	1	1	SEE NOTE 20	CAPACITOR	64
10	10	10	2004148-007	WASHER, FLAT	63
1	1	1	SEE NOTE 31	SENSE AMPLIFIER MODULE, FIXED MEMORY B14	62
—	~~AR~~	~~AR~~	~~2004895-002~~	~~SHIM AGC~~	~~61~~
—	~~AR~~	~~AR~~	~~2004895-001~~	~~SHIM AGC~~	~~60~~
—	1	1	2004899-001	PAD VIBRATION	59
1	1	1	2003970	VIBRATION PAD ASSY	58
4	4	4	NAS1598-D08N	WASHER, SEALING	57
1	1	1	2018773	VALVE PRESSURE ASSEMBLY	56
1	1	1	1000159-5	PACKING, PREFORMED "O" RING	55
2	2	2	2004984-001	WASHER, FLAT	54
8	8	8	2004130	PAD, THREADED	53
18	18	18	2004894-014	WASHER, FLAT	52
4	4	4	2004894-012	WASHER, FLAT	51
2	2	2	1001489-36	SCREW, HEX SOCKET HEAD	50
4	4	4	1004722-2	SCREW, CAPTIVE	49
1	1	1	1000159-7	PACKING, PREFORMED "O" RING	48
18	18	18	2004732-003	SCREW, COATED	47
33	33	33	2004732-001	SCREW, COATED	46
2	2	2	1006347	GASKET, PLATE	45
1	1	1	2004986	PLUG, MACHINE THREAD	44
1	1	1	1004260-19	NAME PLATE, TYPE I	43
1	1	1	2004113-001	BRACKET, CABLE	42
1	1	1	2003099-011	CONNECTOR ASSEMBLY	41
1	1	1	1006380	GASKET, RETAINED	40
58	58	58	2004707	WASHER, KNURLED	39
3	3	3	2003067-041	INTERFACE MODULE A27-29	38
2	2	2	2003070-031	INTERFACE MODULE A25-26	37
—	—	2	2003887-011	POWER SUPPLY MODULE A30-31	36
1	1	1	SEE NOTES 36 & 37	LOGIC MODULE A24	35
1	1	1		LOGIC MODULE A23	34
1	1	1		LOGIC MODULE A22	33
1	1	1		LOGIC MODULE A21	32
1	1	1		LOGIC MODULE A20	31
1	1	1		LOGIC MODULE A19	30
1	1	1		LOGIC MODULE A18	29
1	1	1		LOGIC MODULE A17	28
1	1	1		LOGIC MODULE A16	27
1	1	1		LOGIC MODULE A15	26
1	1	1		LOGIC MODULE A14	25
1	1	1		LOGIC MODULE A13	24
1	1	1		LOGIC MODULE A12	23
4	4	4		LOGIC MODULE A8-11	22
1	1	1		LOGIC MODULE A7	21
1	1	1		LOGIC MODULE A6	20
1	1	1		LOGIC MODULE A5	19
1	1	1		LOGIC MODULE A4	18
1	1	1		LOGIC MODULE A3	17
1	1	1		LOGIC MODULE A2	16
1	1	1	SEE NOTES 36 & 37	LOGIC MODULE A1	15
2	2	2	2003140-031	ROPE DRIVER MODULE B16-17	14
1	1	1	2003027-031	STRAND SELECT MODULE B15	13
1	1	1	SEE NOTE 30	SENSE AMPL MOD, ERASABLE MEMORY B13	12
1	1	1	2003111-021	ERASABLE MEMORY MODULE B12	11
1	1	1	2003026-031	CURRENT SWITCH MODULE B11	10
2	2	2	2003114-021	ERASABLE DRIVER MODULE B9-10	9
1	1	1	2003983-021	ALARM MODULE B8	8
1	1	1	2003036-031	OSCILLATOR MODULE B7	7
1	1	1	2003978-001	MID SPACER	6
1	1	1	2003059-021	INTERCONNECTION HEADER ASSEMBLY	5
1	1	1	2003976-011	TRAY B COVER	4
1	1	1	2003977-011	TRAY A COVER	3
1	1	1	2003093-021	TRAY B WIRED ASSEMBLY	2
—	—	1	2003092-031	TRAY A WIRED ASSEMBLY	1

LIST OF MATERIALS

2003991	
NEXT ASSY	USED ON
APPLICATION	

UNLESS OTHERWISE SPECIFIED
DIMENSIONS ARE IN INCHES
CAPACITOR VALUES ARE IN µf
RESISTOR VALUES ARE IN OHMS
TOLERANCES ON
FRACTIONS DECIMALS ANGLES
± — ± — ± —
DO NOT SCALE THIS DRAWING
MATERIAL
—

MIT
INSTRUMENTATION LAB
CAMBRIDGE MASS

DRAWN
CHECKED
APPROVED
APPROVED
APPROVED
APPROVED
NASA
DATE

MANNED SPACECRAFT CENTER
HOUSTON, TEXAS

COMPUTER ASSEMBLY

CODE IDENT NO 80230
SIZE J
DRAWING NO 200[illegible]993
SCALE 1/1
SHEET 1 OF 2

993 H

C1	
PART NO.	VALUE UUF
3006777-1	10
-15	150
-18	330
-20	470
-22	680
3006777-23	820
SEE NOTE 41	0
3006777-16	220
3006777-17	270

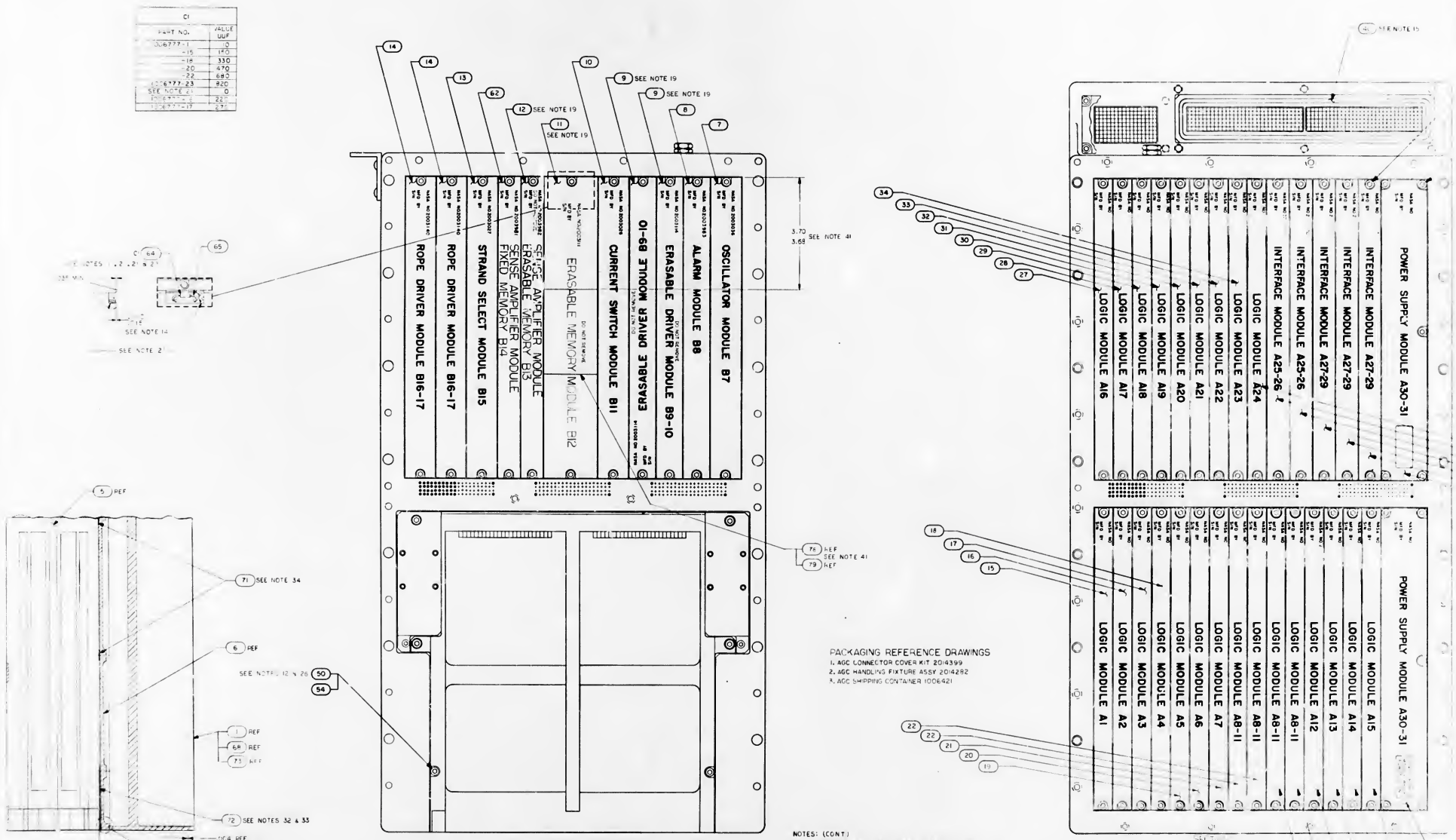

NOTES: (CONT)

33. SHIM, AS REQUIRED, PRIOR TO ASSY OF FIND NO. 6, SURFACE C TO WITHIN ±.002 OF SURFACE B USING FIND NO. 72, NOT TO INCLUDE .004 REF DIMENSION OF FIND NO. 72
34. SHIM, AS REQUIRED, PRIOR TO ASSY OF FIND NO. 6, SURFACE C TO WITHIN ±.002 OF SURFACE B USING FIND NO. 71
35. USE TRAY A WIRED ASSY PART NO. 2003092-001 OR PART NO. 2003092-061
36. FOR -031 CONFIGURATION ONLY USE LOGIC MODULE WITHRU A24 PART NOS 2003888-011 THRU 2003888-231, SEE CHART A
37. FOR -011 CONFIGURATION ONLY USE LOGIC MODULE [illegible] A24, FIND NOS 15 THRU 35, PART NOS [illegible] 231 AND/OR 2003[illegible]-011 THRU 2003[illegible] SEE [illegible]
38. WHEN A COMPUTER IS COMPRISED OF LOGIC MODULE [illegible] PART NOS 2003[illegible]-011 THRU 2003[illegible] AND A TRAY A WIRED ASSY 2003092-041 IT SHALL BE DESIGNATED 200[illegible]-041

2003993 H

REVISIONS					
SYM	ZONE	DESCRIPTION	BY	CHK	DATE / APPROVED
A		INITIAL RELEASE TORR 32358			
B		REVISED PER TORR 32965			
C		REVISED PER TORR 33363			
D		REVISED PER TORR 33609			
E		REVISED PER TORR 33			
F		REVISED PER TORR 3363			
G		REVISED PER TORR 34245			
H		REVISED PER TORR 34245			

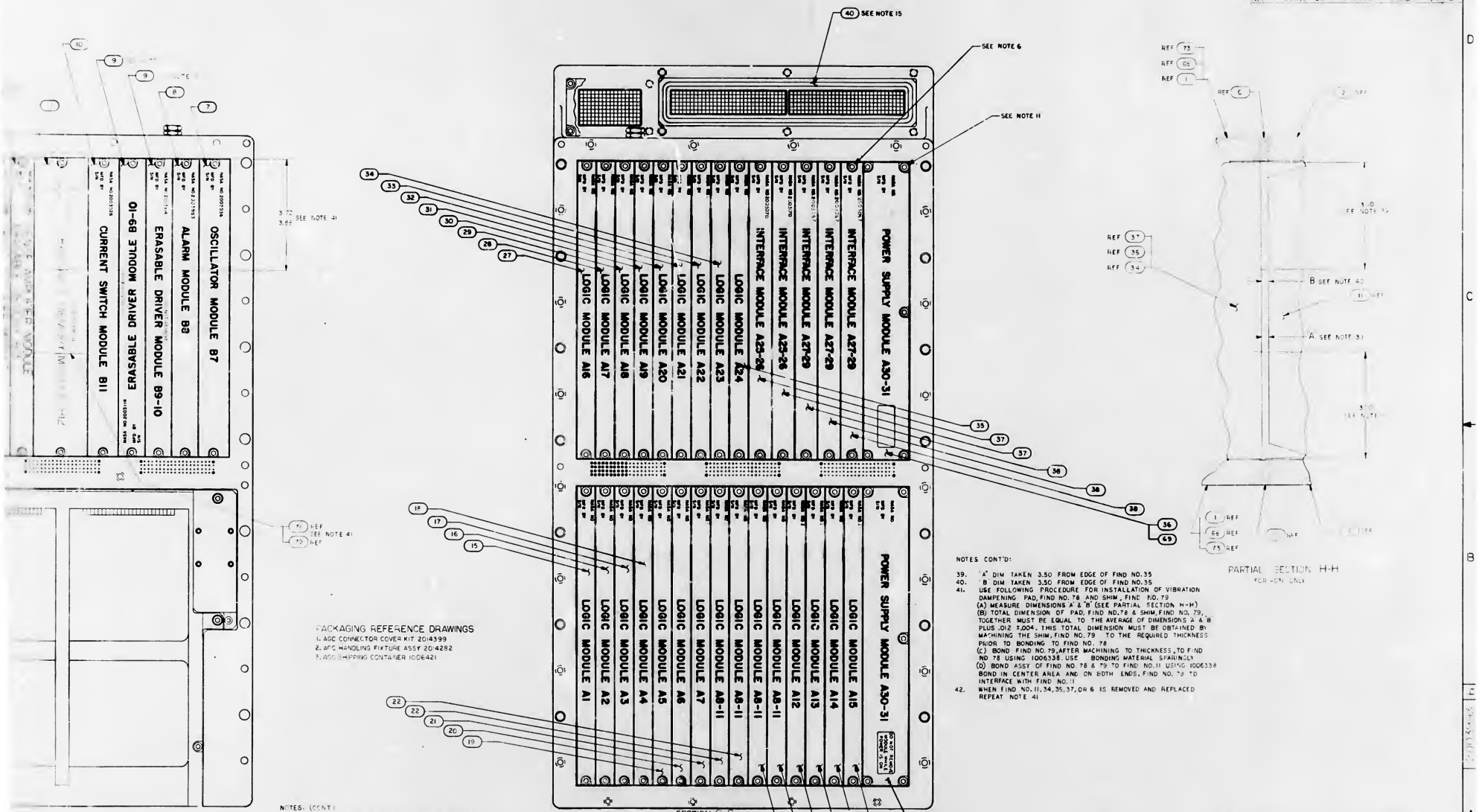

NOTES CONT'D:

39. "A" DIM TAKEN 3.50 FROM EDGE OF FIND NO.35
40. "B" DIM TAKEN 3.50 FROM EDGE OF FIND NO.35
41. USE FOLLOWING PROCEDURE FOR INSTALLATION OF VIBRATION DAMPENING PAD, FIND NO. 78 AND SHIM, FIND NO. 79
    (A) MEASURE DIMENSIONS "A" & "B" (SEE PARTIAL SECTION H-H)
    (B) TOTAL DIMENSION OF PAD, FIND NO.78 & SHIM, FIND NO. 79, TOGETHER MUST BE EQUAL TO THE AVERAGE OF DIMENSIONS "A" & "B" PLUS .012 ±.004. THIS TOTAL DIMENSION MUST BE OBTAINED BY MACHINING THE SHIM, FIND NO. 79 TO THE REQUIRED THICKNESS PRIOR TO BONDING TO FIND NO. 78
    (C) BOND FIND NO. 79, AFTER MACHINING TO THICKNESS, TO FIND NO 78 USING 1006338. USE BONDING MATERIAL SPARINGLY
    (D) BOND ASSY OF FIND NO 78 & 79 TO FIND NO.11 USING 1006338 BOND IN CENTER AREA AND ON BOTH ENDS, FIND NO. 79 TO INTERFACE WITH FIND NO. 11
42. WHEN FIND NO.11, 34, 35, 37, OR 6 IS REMOVED AND REPLACED REPEAT NOTE 41

NOTES: (CONT)

33. SHIM AS REQUIRED, PRIOR TO ASSY OF FIND NO. 6, SURFACE C TO WITHIN ±.002 OF SURFACE B USING FIND NO. 72, NOT TO INCLUDE .004 REF DIMENSION OF FIND NO. 72
34. SHIM AS REQUIRED, PRIOR TO ASSY OF FIND NO. 6, SURFACE C TO WITHIN ±.002 OF SURFACE B USING FIND NO. 71
35. USE TRAY A WIRED ASSY PART NO. 2003092-041 OR PART NO. 2003092-061
36. FOR -031 CONFIGURATION ONLY USE LOGIC MODULE A1 THRU A24 PART NOS. 2003888-011 THRU 2003888-231, SEE CHART "A"
37. FOR -011 & -021 CONFIGURATION ONLY USE LOGIC MODULE A1 THRU A24, FIND NOS. 15 THRU 35, PART NOS. 2003121-011 THRU 2003121-231 AND/OR 2003888-011 THRU 2003888-231, SEE CHART "A"
38. WHEN A COMPUTER IS COMPRISED OF LOGIC MODULES A1 THRU A24, PART NOS. 2003888-011 THRU 2003888-231 AND A TRAY "A" WIRED ASSY 2003092-041 IT SHALL BE DESIGNATED 2003993-031

QTY REQD	PART OR IDENTIFYING NO	NOMENCLATURE OR DESCRIPTION	FIND NO
		LIST OF MATERIALS	

UNLESS OTHERWISE SPECIFIED DIMENSIONS ARE IN INCHES. CAPACITOR VALUES ARE IN µf. RESISTOR VALUES ARE IN OHMS. TOLERANCES ON FRACTIONS ±, DECIMALS ±, ANGLES ±. DO NOT SCALE THIS DRAWING. MATERIAL —

NEXT ASSY | USED ON | APPLICATION

MIT INSTRUMENTATION LAB CAMBRIDGE, MASS

MANNED SPACECRAFT CENTER HOUSTON, TEXAS

DRAWN | CHECKED | APPROVED | APPROVED

COMPUTER ASSEMBLY

CODE IDENT NO 80230 | SIZE J | DRAWING NO 2003993

SCALE 1/1 | SHEET 2 OF 2

CHART A SEE NOTES 36 & 37				
PART NO FOR -011 & -021 CONFIGURATION		PART NO FOR -011 & -021 CONFIGURATION		MODULES
2003921	-011	2003888	-011	LOGIC MODULE A1
↓	-021	↓	-021	↓ A2
	-031		-031	A3
	-041		-041	A4
	-051		-051	A5
	-061		-061	A6
	-071		-071	A7
	-081		-081	A8-A11
	-091		-091	A12
	-111		-111	A13
	-121		-121	A14
	-131		-131	A15
	-141		-141	A16
	-151		-151	A17
	-161		-161	A18
	-171		-171	A19
	-181		-181	A20
	-191		-191	A21
	-211		-211	A22
↑	-221	↑	-221	↑ A23
2003921	-231	2003888	-231	LOGIC MODULE A24

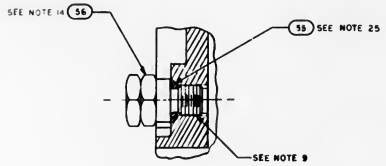

PARTIAL SECTION F F
SCALE: 2/1

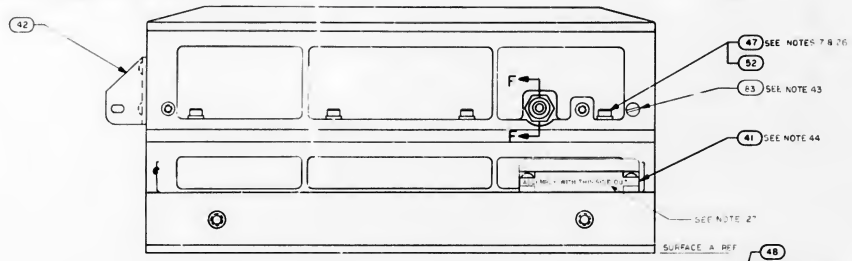

VIEW B-B

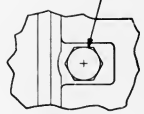

VIEW E-E

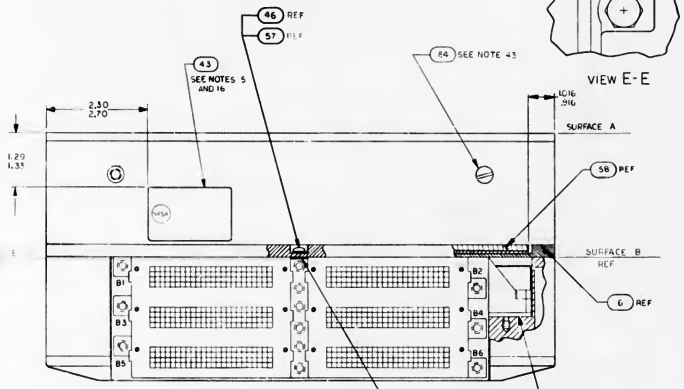

VIEW A-A

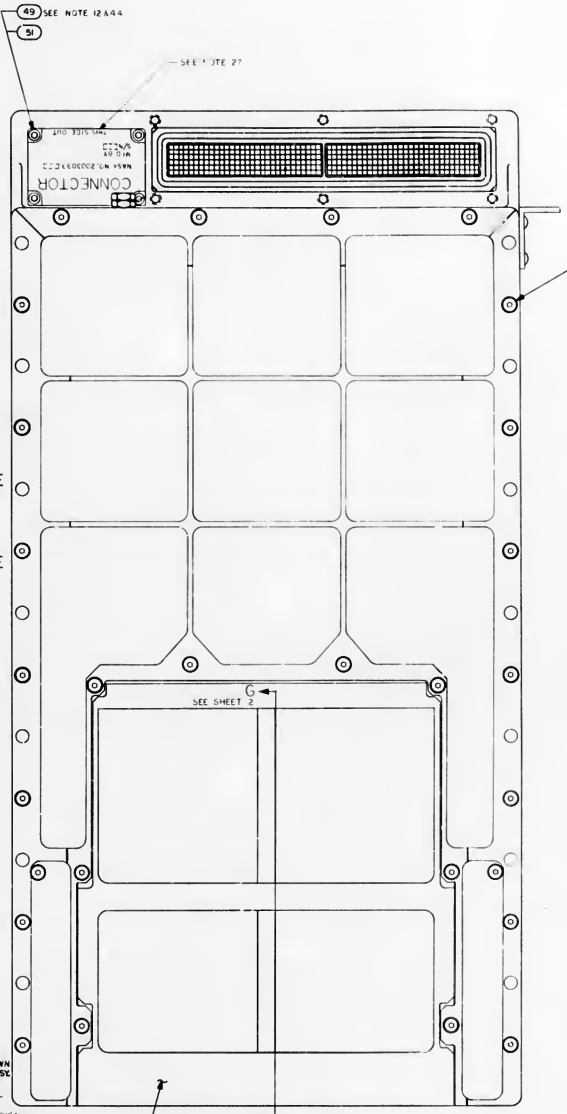

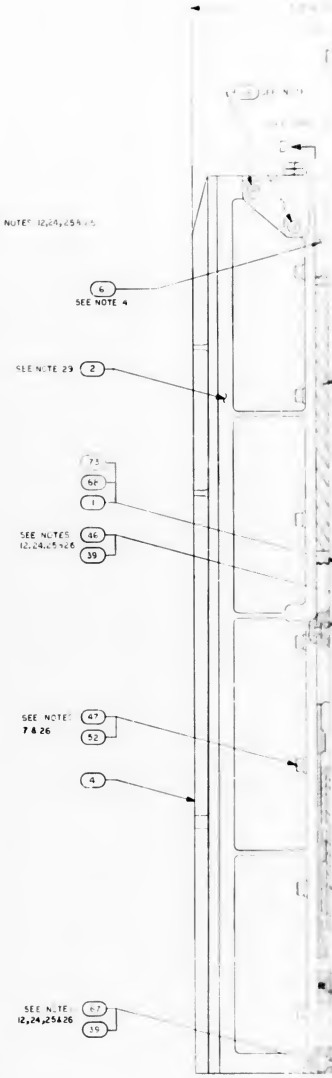

NOTES :

1. INTERPRET DRAWING IN ACCORDANCE WITH STANDARDS PRESCRIBED BY MIL-D-70327
2. PHANTOM LINES DENOTE AGC COLDPLATE AND HANDLING FIXTURE TO BE SUPPLIED BY NORTH AMERICAN AVIATION, INC
3. ADD SILICONE COMPOUND 1006879 TO MODULE MATING METAL SURFACES AND TRAY MATING SURFACES
4. ASSEMBLE FIND NO 53 AND FIND NO 63 TO FIND NO 6 AND FIND NO 6 TO FIND NO 2 PRIOR TO ASSEMBLY OF FIND NO 2 TO FIND NO 1 OR FIND NO 68 OR FIND NO 73
5. BOND FIND NO. 43 TO FIND NO. 1 OR FIND NO 68 OR FIND NO. 73 PER ND1002022 & MIL-T-10500 III
6. UNLESS OTHERWISE SPECIFIED TORQUE ALL MODULE MOUNTING SCREWS 15/19 INCH POUNDS
7. TORQUE FIND NO. 47 TO 28/32 INCH POUNDS
8. ~~FINISH IS REQUIRED TO SATISFY ICD GAEC 510-1001~~
9. APPLY SEALING COMPOUND MIL-S-22473 GRADE H TO FIND NO. 53, FIND NO. 56 AND FIND NO. 44
10. COMPLETED ASSEMBLY SHALL BE TESTED IN ACCORDANCE WITH AND SHALL MEET ALL THE REQUIREMENTS OF PS2016007
11. TORQUE FOR FIND NO. 36 AND FIND NO. 69 MOUNTING SCREWS TO BE 10/12 INCH POUNDS
12. TORQUE FOR FIND NO. 46, 49, 50 AND 67 TO BE 18/22 INCH POUNDS
13. TORQUE FOR FIND NO. 53 TO BE 4/6 INCH POUNDS
14. TORQUE FOR FIND NO. 44 AND FIND NO. 56 TO BE 137/157 INCH POUNDS
15. FIND NO. 40 SHALL BE SUPPLIED AS PART OF THIS ASSEMBLY
16. MARK COMPUTER ASSEMBLY AND RELATED PART NO., APPLICABLE DASH NO., SERIAL NO. AND CONTRACT NO. PER 1004260 AND SERIALIZE PER ND1002023
17. FINISH SURFACE [A-2] ~~PER ICD NAA MN01-01302-116 THIS ASSEMBLY MUST BE CAPABLE OF MEETING ELECTRICAL BONDING REQUIREMENTS OF ICD NAA MN01-01302-116~~
18. BOND FIND NO. 58 TO FIND NO. 6 IN POSITION SHOWN USING 1006338 CURE AT ROOM TEMP 24 HRS PRIOR TO ASSY.
19. REFERENCED MODULES MUST NOT BE REPLACED OR INTERCHANGED WITHOUT REPEATING NOMINAL SELECTION PROCEDURE PER NOTE 10
20. THE VALUE OF C1 TO BE DETERMINED AT ELECTRICAL TEST AND SELECTED FROM APPROPRIATE CHART
21. WHEN THE VALUE OF C1 IS ZERO NO COMPONENT SHALL BE USED
22. ENCAPSULATE AREA SHOWN AFTER SELECTION AND INSTALLATION OF C1 USING ND1002009 METHOD C OR D USING PRIMER PER SCD1012513
23. WELD PER ND1002005
24. ASSEMBLE HARDWARE WITH SMOOTH FACE OF FIND NO. 39 IN CONTACT WITH SCREW HEAD
25. FIND NO. 39, 48, 55 & 57 TO BE DISCARDED AND REPLACED WITH NEW PARTS EACH TIME THEY ARE DISASSEMBLED
26. SEAL EXPOSED HARDWARE ASSEMBLIES WITH .002 MIN THICK COATING OF FIND NO. 80. OVERALL COMPUTER ASSEMBLY DIMENSIONS SHALL NOT BE EXCEEDED CURE AT ROOM TEMP 24 HRS
27. STENCILING SHOWN FOR ORIENTATION ONLY
28. KEEP ALL MATING THREADS OF SCREWS, TRAY AND MID SPACER INSERTS FREE OF SILICONE COMPOUND
29. FILL FEMALE INSULATORS OF B41 AND B42 CONNECTORS USING FIND NO 70 PRIOR TO ASSEMBLY OF FIND NO 4 TO FIND NO 2

[illegible] FIND NO 12 [illegible] USE EITHER [illegible]

31. [illegible] USE EITHER [illegible]

32. [illegible] FIND NO 5 PER [illegible] TO ASSEMBLY [illegible]

33. SEE SHEET 2
34. SEE SHEET 2
35. SEE SHEET 2
36. SEE SHEET 2
37. SEE SHEET 2
38. SEE SHEET 2
39. SEE SHEET 2
40. SEE SHEET 2
41. SEE SHEET 2
42. SEE SHEET 2

2003993 J

REVISIONS					
SYM	ZONE	EN CHANGE	BY	CHK	DATE	APPROVED
A		INITIAL RELEASE				
B		REVISED PER TDRR 3				
C		REVISED PER TDRR 3				
D		REVISED PER TDRR 3				
E						
F		REVISED PER TDRR 3363				
G		REVISED PER TDRR 36260	G.A.			
H		RELEASE PER TDRR 36253				
J		REVISED PER TDRR 36259				

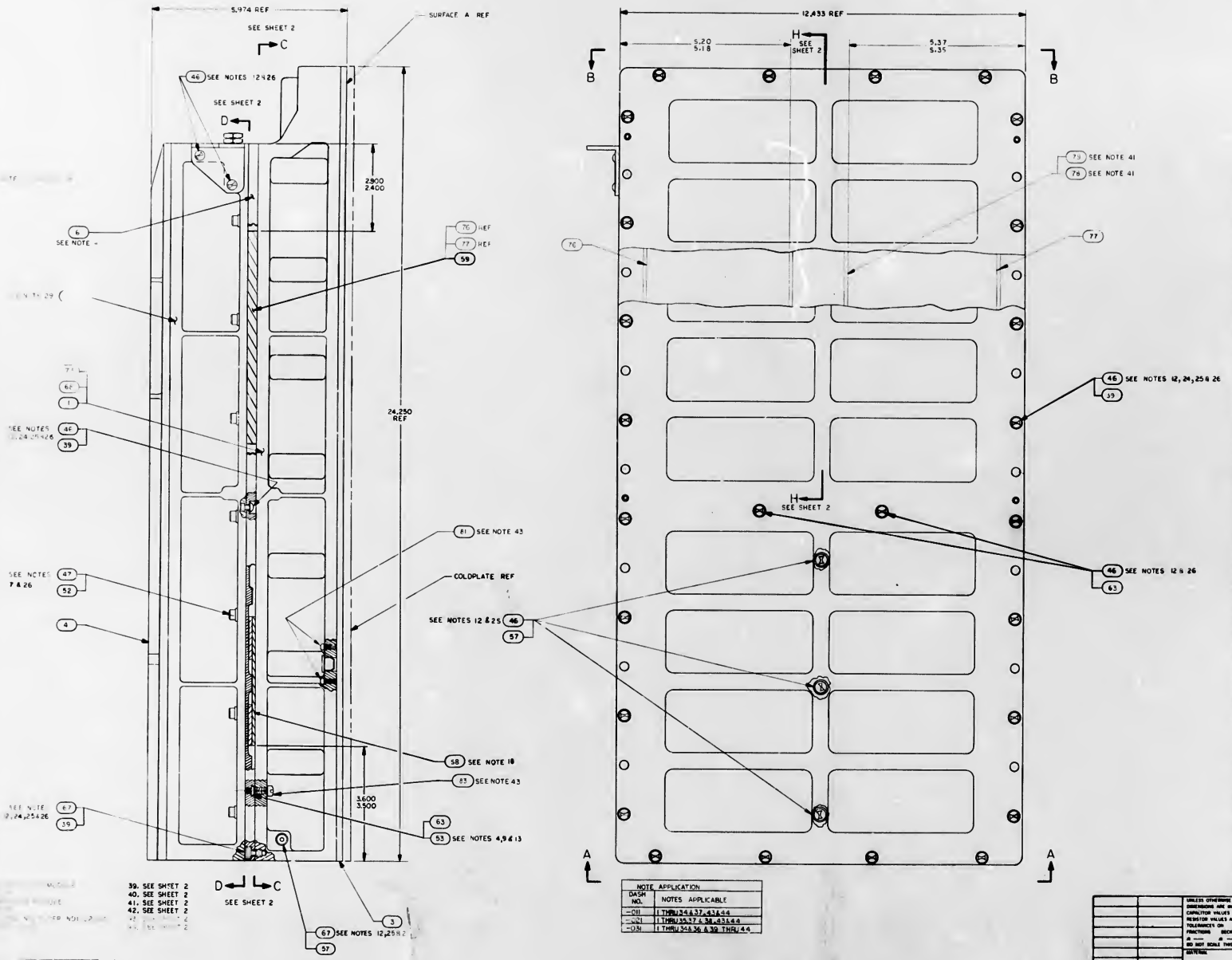

NOTE APPLICATION	
DASH NO.	NOTES APPLICABLE
-011	1 THRU 34 & 37, 43 & 44
-021	1 THRU 35, 37 & 38, 43 & 44
-031	1 THRU 34 & 36 & 39 THRU 44

QTY REQD (-011)	QTY REQD (-021)	QTY REQD (-031)	PART IDENTIFIER NO	NOMENCLATURE OR DESCRIPTION	FIGURE NO
4	4	4	1010485-432	SCREW, NYLON	76
11	11	11	1010485-332	SCREW, NYLON	75
6	6	6	1010485-235	SCREW, NYLON	81
28	28	28	1010485-100	SCREW, NYLON	81
AR	AR	AR	1006338-003	SEALING COMPOUND, SILICONE RUBBER	80
1	—	—	2004698	SHIM, VIBRATION DAMPENING	79
1	—	—	2004699	PAD, VIBRATION DAMPENING	78
1	—	—	2004893-007	PAD, VIBRATION	77
1	—	—	2004893-006	PAD, VIBRATION	76
AR	—	—	2004895-002	SHIM, AGC	75
AR	—	—	2004895-001	SHIM, AGC	74
1	—	—	2003092-041	TRAY A, WIRED ASSY	73
AR	AR	AR	2010801	SHIM, AGC	72
AR	AR	AR	2010800-000	SHIM	71
			2005944	AGCW RE LIST	70
AR	AR	AR	MIL-S-8660	SILICONE COMPOUND	70
2	2	—	2003092-011	POWER SUPPLY MODULE A30-31	69
—	1	—	SEE NOTE 15	TRAY "A" WIRED ASSY	68
33	33	33	2004732-002	SCREW, COATED	67
AR	AR	AR	1006338-000	SEALING COMPOUND, SILICONE RUBBER	66
AR	AR	AR	1006776-22	INSULATION, SLEEVING ELECTRICAL	65
1	1	1	SEE NOTE 20	CAPACITOR	64
10	10	10	2004148-007	WASHER, FLAT	63
1	1	1	SEE NOTE 31	SENSE AMPLIFER MODULE, FIXED MEMORY B14	62
—	AR	AR	2004898-002	SHIM AGC	61
—	AR	AR	2004898-001	SHIM AGC	60
—	1	1	2004899-001	PAD VIBRATION	59
1	1	1	2003970	VIBRATION PAD ASSY	58
4	4	4	NAS1598-D08N	WASHER, SEALING	57
1	1	1	2018773	VALVE PRESSURE ASSEMBLY	56
1	1	1	1000159-5	PACKING, PREFORMED "O" RING	55
2	2	2	2004984-001	WASHER, FLAT	54
8	8	8	2004139	PAD, THREADED	53
18	18	18	2004894-014	WASHER, FLAT	52
4	4	4	2004894-012	WASHER, FLAT	51
2	2	2	1001489-36	SCREW, HEX SOCKET HEAD	50
4	4	4	1004722-2	SCREW, CAPTIVE	49
1	1	1	1000159-7	PACKING, PREFORMED "O" RING	48
18	18	18	2004732-003	SCREW, COATED	47
33	33	33	2004732-001	SCREW, COATED	46
2	2	2	1006347	GASKET, FLATE	45
1	1	1	2004986	PLUG, MACHINE THREAD	44
1	1	1	1004260-19	NAME PLATE, TYPE 2	43
1	1	1	2004113-001	BRACKET, CABLE	42
1	1	1	2003059-011	CONNECTOR ASSEMBLY	41
1	1	1	1006380	GASKET, RETAINED	40
58	58	58	2004707	WASHER, KNURLED	39
3	3	3	2003067-041	INTERFACE MODULE A27-29	38
2	2	2	2003070-031	INTERFACE MODULE A25-26	37
—	—	2	2003087-011	POWER SUPPLY MODULE A30-31	36
1	1	1	SEE NOTES 36 & 37	LOGIC MODULE A24	35
1	1	1		LOGIC MODULE A23	34
1	1	1		LOGIC MODULE A22	33
1	1	1		LOGIC MODULE A21	32
1	1	1		LOGIC MODULE A20	31
1	1	1		LOGIC MODULE A19	30
1	1	1		LOGIC MODULE A18	29
1	1	1		LOGIC MODULE A17	28
1	1	1		LOGIC MODULE A16	27
1	1	1		LOGIC MODULE A15	26
1	1	1		LOGIC MODULE A14	25
1	1	1		LOGIC MODULE A13	24
1	1	1		LOGIC MODULE A12	23
4	4	4		LOGIC MODULE A8-11	22
1	1	1		LOGIC MODULE A7	21
1	1	1		LOGIC MODULE A6	20
1	1	1		LOGIC MODULE A5	19
1	1	1		LOGIC MODULE A4	18
1	1	1		LOGIC MODULE A3	17
1	1	1		LOGIC MODULE A2	16
1	1	1	SEE NOTES 36 & 37	LOGIC MODULE A1	15
2	2	2	2003140-031	ROPE DRIVER MODULE B16-17	14
1	1	1	2003037-031	STRAND SELECT MODULE B15	13
1	1	1	SEE NOTE 30	SENSE AMPL MOD, ERASABLE MEMORY B13	12
1	1	1	2003111-022	ERASABLE MEMORY MODULE B12	11
1	1	1	2003026-031	CURRENT SWITCH MODULE B11	10
2	2	2	2003114-021	ERASABLE DRIVER MODULE B9-10	9
1	1	1	2003083-021	ALARM MODULE B8	8
1	1	1	2003036-011	OSCILLATOR MODULE B7	7
1	1	1	2003978-001	MID SPACER	6
1	1	1	2003059-021	INTERCONNECTION HEADER ASSEMBLY	5
1	1	1	2003976-011	TRAY B COVER	4
1	1	1	2003977-011	TRAY A COVER	3
1	1	1	2003093-021	TRAY B WIRED ASSEMBLY	2
—	—	1	2003092-031	TRAY A WIRED ASSEMBLY	1

LIST OF MATERIALS

UNLESS OTHERWISE SPECIFIED DIMENSIONS ARE IN INCHES CAPACITOR VALUES ARE IN µf RESISTOR VALUES ARE IN OHMS TOLERANCES ON FRACTIONS ± DECIMALS .XX ± .XXX ± ANGLES ± DO NOT SCALE THIS DRAWING

MATERIAL —

2003991

NEXT ASSY | USED ON

APPLICATION

MIT INSTRUMENTATION LAB CAMBRIDGE 39 MASS

MANNED SPACECRAFT CENTER HOUSTON TEXAS

DRAWN | CHECKED | APPROVED | APPROVED | APPROVED DEPT | APPROVED ENG | APPROVED DATE

COMPUTER ASSEMBLY

CODE IDENT NO 80230 | SIZE J | DRAWING NO 2003993 | SCALE — | SHEET 1 OF 2

C1	
PART NO.	VALUE UUF
1006777-1	10
-15	150
-19	330
-20	470
-22	680
1006777-23	820
SEE NOTE 21	0
1006777-[illegible]	220
1006777-17	270

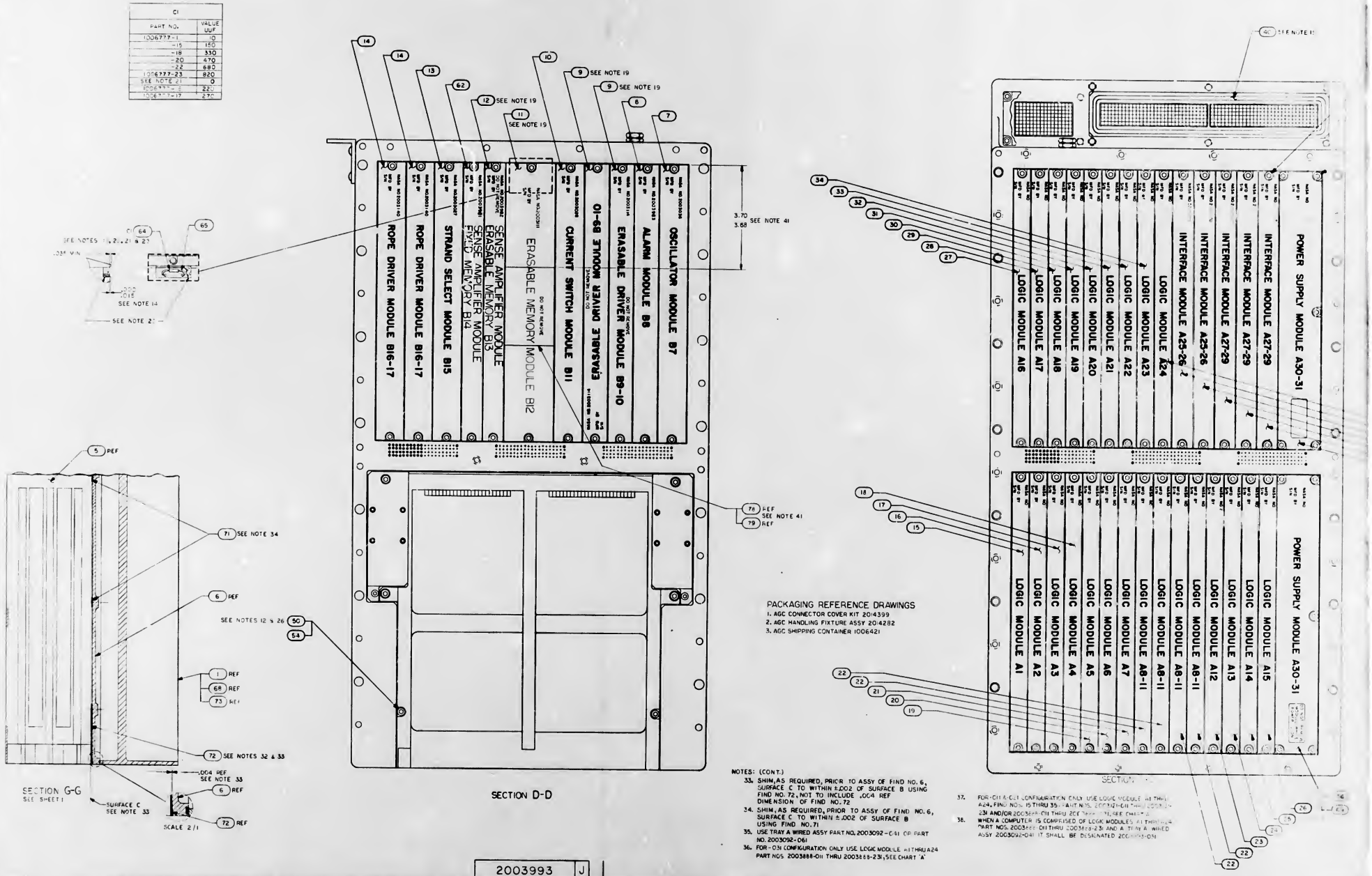

NOTES: (CONT.)

33. SHIM, AS REQUIRED, PRIOR TO ASSY OF FIND NO. 6, SURFACE C TO WITHIN ±.002 OF SURFACE B USING FIND NO. 72, NOT TO INCLUDE .004 REF DIMENSION OF FIND NO. 72
34. SHIM, AS REQUIRED, PRIOR TO ASSY OF FIND NO. 6, SURFACE C TO WITHIN ±.002 OF SURFACE B USING FIND NO. 71
35. USE TRAY A WIRED ASSY PART NO. 2003092-041 OR PART NO. 2003092-061
36. FOR-011 CONFIGURATION ONLY USE LOGIC MODULE A1 THRU A24 PART NOS. 2003888-011 THRU 2003888-23, SEE CHART 'A'
37. FOR-011 A-011 CONFIGURATION ONLY USE LOGIC MODULE A1 THRU A24, FIND NOS. 15 THRU 35. PART NOS. 2003[illegible]-011 THRU 2003[illegible]-23 AND/OR 2003[illegible]-011 THRU 2003[illegible]-23, SEE CHART 'A'. WHEN A COMPUTER IS COMPRISED OF LOGIC MODULES A1 THRU A24 PART NOS. 2003[illegible]-011 THRU 2003[illegible]-23 AND A TRAY A WIRED ASSY 2003092-041 IT SHALL BE DESIGNATED 2003[illegible]-011
38. [illegible]

2003993 J

REVISIONS					
SYM	ZONE	DESCRIPTION	BY	CHK	DATE	APPROVED
A		INIT A [illegible]				
B		RELEASED PER TORR 32965	SHW			
C		[illegible]				
D		REVISED PER TORR 33[illegible]				
E		[illegible]				
F		REVISED PER TORR 33638				
G		REVISED PER TORR 34065				
H		REVISED PER TORR 34065				
J		REVISED PER TORR 34359				

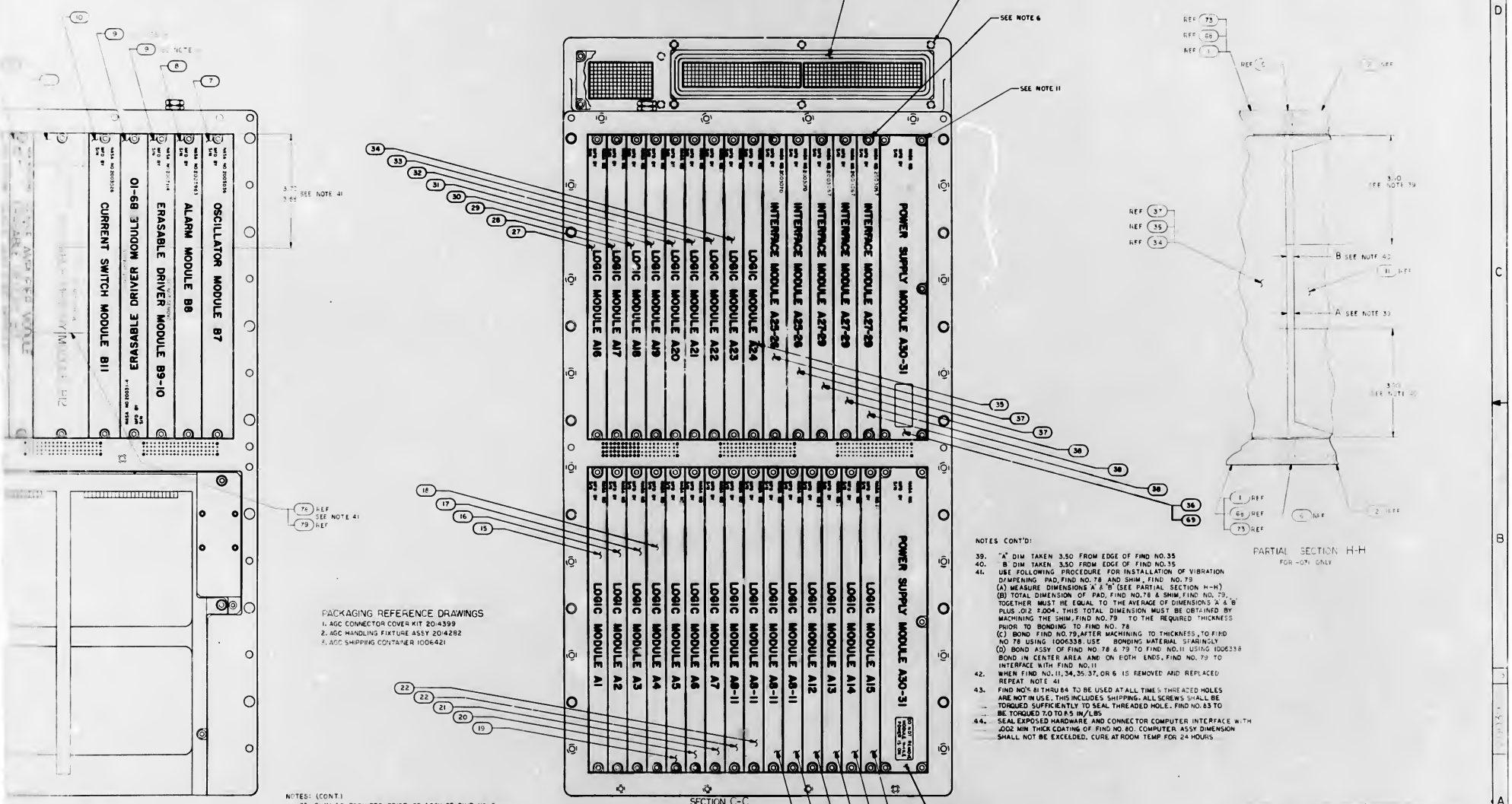

PACKAGING REFERENCE DRAWINGS
1. AGC CONNECTOR COVER KIT 2014399
2. AGC HANDLING FIXTURE ASSY 2014282
3. AGC SHIPPING CONTAINER 1006421

NOTES CONT'D:

39. "A" DIM TAKEN 3.50 FROM EDGE OF FIND NO.35
40. B DIM TAKEN 3.50 FROM EDGE OF FIND NO.35
41. USE FOLLOWING PROCEDURE FOR INSTALLATION OF VIBRATION DAMPENING PAD, FIND NO. 78 AND SHIM, FIND NO. 79
(A) MEASURE DIMENSIONS 'A' & 'B' (SEE PARTIAL SECTION H-H)
(B) TOTAL DIMENSION OF PAD, FIND NO.78 & SHIM, FIND NO. 79, TOGETHER MUST BE EQUAL TO THE AVERAGE OF DIMENSIONS 'A' & 'B' PLUS .012 ±.004. THIS TOTAL DIMENSION MUST BE OBTAINED BY MACHINING THE SHIM, FIND NO.79 TO THE REQUIRED THICKNESS PRIOR TO BONDING TO FIND NO. 78
(C) BOND FIND NO.79, AFTER MACHINING TO THICKNESS, TO FIND NO 78 USING 1006338 USE BONDING MATERIAL SPARINGLY
(D) BOND ASSY OF FIND NO.78 & 79 TO FIND NO.11 USING 1006338 BOND IN CENTER AREA AND ON BOTH ENDS, FIND NO. 79 TO INTERFACE WITH FIND NO.11
42. WHEN FIND NO.11, 34, 35, 37, OR 6 IS REMOVED AND REPLACED REPEAT NOTE 41
43. FIND NO'S 81 THRU 84 TO BE USED AT ALL TIMES THREADED HOLES ARE NOT IN USE. THIS INCLUDES SHIPPING. ALL SCREWS SHALL BE TORQUED SUFFICIENTLY TO SEAL THREADED HOLE. FIND NO. 83 TO BE TORQUED 7.0 TO 8.5 IN/LBS
44. SEAL EXPOSED HARDWARE AND CONNECTOR COMPUTER INTERFACE WITH .002 MIN THICK COATING OF FIND NO. 80. COMPUTER ASSY DIMENSION SHALL NOT BE EXCEEDED. CURE AT ROOM TEMP FOR 24 HOURS

NOTES: (CONT.)

33. SHIM, AS REQUIRED, PRIOR TO ASSY OF FIND NO. 6, SURFACE C TO WITHIN ±.002 OF SURFACE B USING FIND NO. 72, NOT TO INCLUDE .004 REF DIMENSION OF FIND NO. 72
34. SHIM, AS REQUIRED, PRIOR TO ASSY OF FIND NO. 6, SURFACE C TO WITHIN ±.002 OF SURFACE B USING FIND NO. 71
35. USE TRAY A WIRED ASSY PART NO. 2003092-041 OR PART NO. 2003092-061
36. FOR -031 CONFIGURATION ONLY USE LOGIC MODULE A1 THRU A24 PART NOS. 2003888-011 THRU 2003888-231, SEE CHART 'A'
37. FOR -011 & -021 CONFIGURATION ONLY USE LOGIC MODULE A1 THRU A24, FIND NOS. 15 THRU 35, PART NOS. 2003121-011 THRU 2003121-231 AND/OR 2003888-011 THRU 2003888-231, SEE CHART 'A'
38. WHEN A COMPUTER IS COMPRISED OF LOGIC MODULES A1 THRU A24, PART NOS. 2003888-011 THRU 2003888-231 AND A TRAY 'A' WIRED ASSY 2003092-041 IT SHALL BE DESIGNATED 2003993-031

QTY REQD	PART OR IDENTIFYING NO	NOMENCLATURE OR DESCRIPTION	FIND NO
		LIST OF MATERIAL	

UNLESS OTHERWISE SPECIFIED DIMENSIONS ARE IN INCHES
CAPACITOR VALUES ARE IN μf
RESISTOR VALUES ARE IN OHMS
TOLERANCES ON
FRACTIONS ±1/64 DECIMALS ±.005 ANGLES ±1°
DO NOT SCALE THIS DRAWING
MATERIAL

NEXT ASSY | USED ON
APPLICATION

NAVAL INSTRUMENTATION LAB
CAMBRIDGE, MASS.

MANNED SPACECRAFT CENTER
HOUSTON TEXAS

DRAWN
CHECKED
APPROVED
APPROVED

COMPUTER ASSEMBLY

CODE IDENT NO 80230 | SIZE J | DRAWING NO 03993
SCALE 1/1 | SHEET 2 OF 2

CHART A SEE NOTES 36&37			
PART NO. FOR -011 & -021 CONFIGURATION	PART NO. FOR -011 & -021 CONFIGURATION	MODULES	
2003121 -011	2003888 -011	LOGIC MODULE A1	
-021	-021	A2	
-031	-031	A3	
-041	-041	A4	
-051	-051	A5	
-061	-061	A6	
-071	-071	A7	
-081	-081	A8-A11	
-091	-091	A12	
-111	-111	A13	
-121	-121	A14	
-131	-131	A15	
-141	-141	A16	
-151	-151	A17	
-161	-161	A18	
-171	-171	A19	
-181	-181	A20	
-191	-191	A21	
-211	-211	A22	
-221	-221	A23	
2003121 -231	2003888 -231	LOGIC MODULE A24	

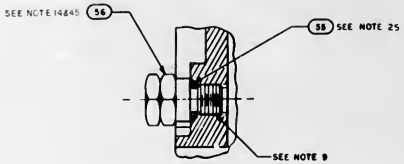

PARTIAL SECTION F F
SCALE: 2/1

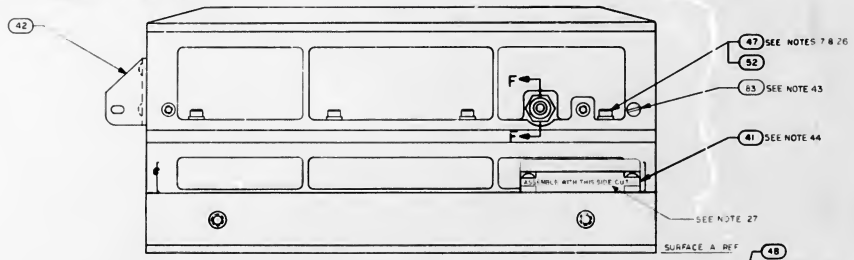

VIEW B-B

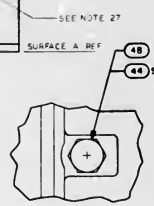

VIEW E-E

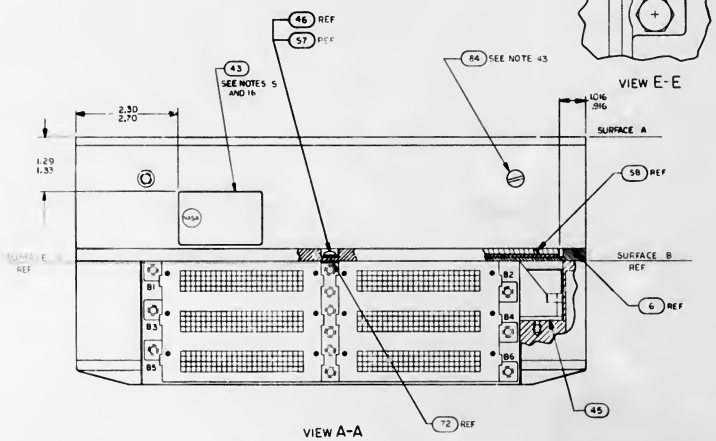

VIEW A-A

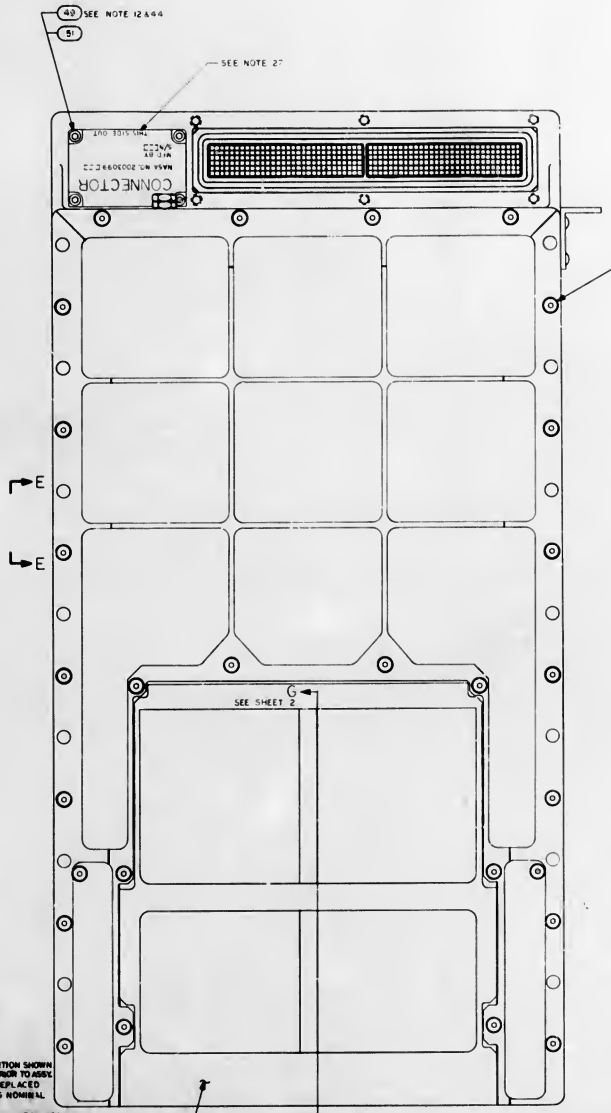

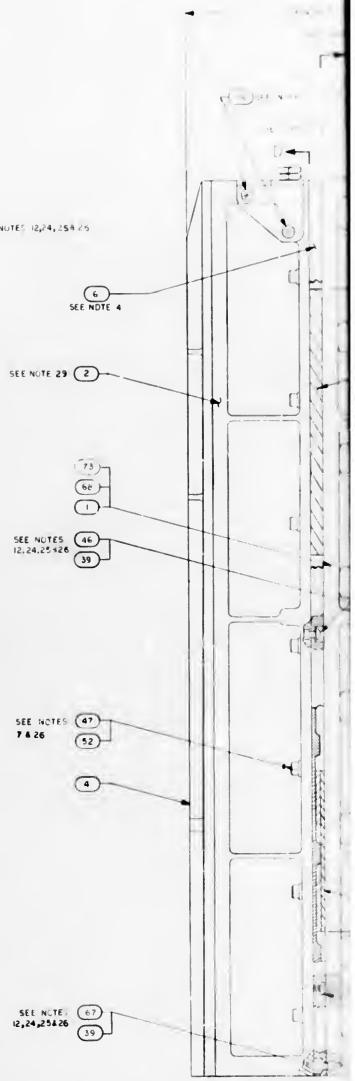

NOTES:

1. INTERPRET DRAWING IN ACCORDANCE WITH STANDARDS PRESCRIBED BY MIL-D-70327
2. PHANTOM LINES DENOTE AGC COLDPLATE AND HANDLING FIXTURE TO BE SUPPLIED BY NORTH AMERICAN AVIATION, INC
3. ADD SILICONE COMPOUND 1006879 TO MODULE MATING METAL SURFACES AND TRAY MATING SURFACES
4. ASSEMBLE FIND NO. 53 AND FIND NO 63 TO FIND NO 6 AND FIND NO. 6 TO FIND NO.2 PRIOR TO ASSEMBLY OF FIND NO.2 TO FIND NO.1 OR FIND NO. 68 OR FIND NO. 73
5. BOND FIND NO.43 TO FIND NO.1 OR FIND NO.68 OR FIND NO.73 PER NDG0219, METHOD II
6. UNLESS OTHERWISE SPECIFIED TORQUE ALL MODULE MOUNTING SCREWS 15/19 INCH POUNDS
7. TORQUE FIND NO.47 TO 28/32 INCH POUNDS
8. FINISH IS ~~AE HMAO TO SATISF ICD 6AEC-510-10001~~
9. APPLY SEALING COMPOUND MIL-S-22473 GRADE H TO FIND NO.53, FIND NO.56 AND FIND NO. 44
10. COMPLETED ASSEMBLY SHALL BE TESTED IN ACCORDANCE WITH AND SHALL MEET ALL THE REQUIREMENTS OF PS2016007
11. TORQUE FOR FIND NO.36 AND FIND NO.69 MOUNTING SCREWS TO BE 10/12 INCH POUNDS
12. TORQUE FOR FIND NO. 46, 49, 50 AND 67 TO BE 18/22 INCH POUNDS
13. TORQUE FOR FIND NO.53 TO BE 4/6 INCH POUNDS
14. TORQUE FOR FIND NO. 44 AND FIND NO. 56 TO BE .137/.157 INCH POUNDS
15. FIND NO. 40 SHALL BE SUPPLIED AS PART OF THIS ASSEMBLY
16. MARK "MOTHER ASSEMBLY" AND RELATED PART NO., APPLICABLE DASH NO., SERIAL NO. AND CONTRACT NO. PER 1004260 AND SERIALIZE PER ND1002023
17. FINISH SURFACE ~~"AA"~~ PER ICD NAA WHO1-01302-116 THIS ASSEMBLY MUST BE CAPABLE OF MEETING ELECTRICAL BONDING REQUIREMENTS OF ICD NAA WHO1-01302-116
18. BOND FIND NO.58 TO FIND NO. 6 IN POSITION SHOWN USING 1006336 CURE AT ROOM TEMP 24 HRS PRIOR TO ASSY.
19. REFERENCED MODULES MUST NOT BE REPLACED OR INTERCHANGED WITHOUT REPEATING NOMINAL SELECTION PROCEDURE PER NOTE 10
20. THE VALUE OF C1 TO BE DETERMINED AT ELECTRICAL TEST AND SELECTED FROM APPROPRIATE CHART
21. WHEN THE VALUE OF C1 IS ZERO NO COMPONENT SHALL BE USED
22. ENCAPSULATE AREA SHOWN AFTER SELECTION AND INSTALLATION OF C1 USING NDG0200 SEALER C DEPO. USING PRIMER PER SCD0012543
23. WELD PER ND1002009
24. ASSEMBLE HARDWARE WITH SMOOTH FACE OF FIND NO. 39 IN CONTACT WITH [illegible]
25. [illegible] AND REPLACED WITH NEW PARTS EACH [illegible] THEY ARE [illegible]
26. SEAL EPOXIDE [illegible] WITH .002 MIN THICK COATING OF FIND NO.80. OVERALL COMPUTER ASSEMBLY DIMENSIONS SHALL NOT BE EXCEEDED. CURE AT ROOM TEMP 24 HRS.
27. STENCILING SHOWN FOR ORIENTATION ONLY
28. KEEP ALL MATING THREADS OF SCREWS, TRAY AND MID SPACER INSERTS FREE OF SILICONE COMPOUND
29. FILL FEMALE INSULATORS OF B41 AND B42 CONNECTORS USING FIND NO. 70 PRIOR TO ASSEMBLY OF FIND NOS TO FIND NO.2
30. FIND NO. 12 ERASEABLE MEMORY, SENSE AMPLIFIER MODULE USE EITHER 2003391-011 OR 2003391-021
31. FIND NO. 62 FIXED MEMORY, SENSE AMPLIFIER MODULE USE EITHER 2003391-021 OR 2003391-031
32. FIND FIND NO. 72 [illegible] EDGES TO FIND NO.5 PER NDG0200 TYPE II PRIOR TO ASSEMBLY OF FIND NO.5
33. SEE SHEET 2
34. SEE SHEET 2
35. SEE SHEET 2
36. SEE SHEET 2
37. SEE SHEET 2
38. SEE SHEET 2
39. SEE SHEET 2
40. SEE SHEET 2
41. SEE SHEET 2
42. SEE SHEET 2

2003993 K

2003993 KE 1/2 SH 1/2

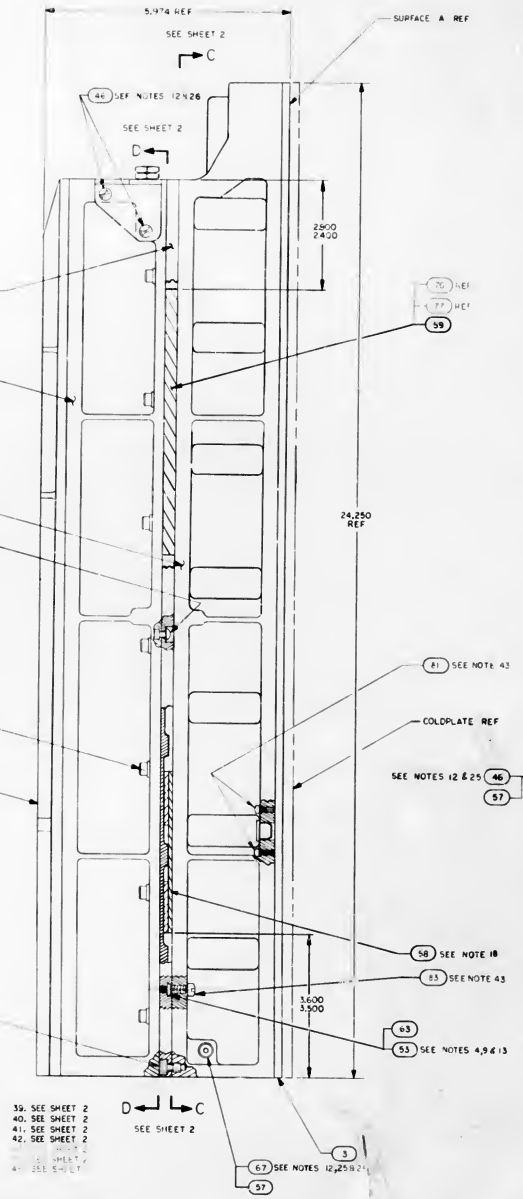

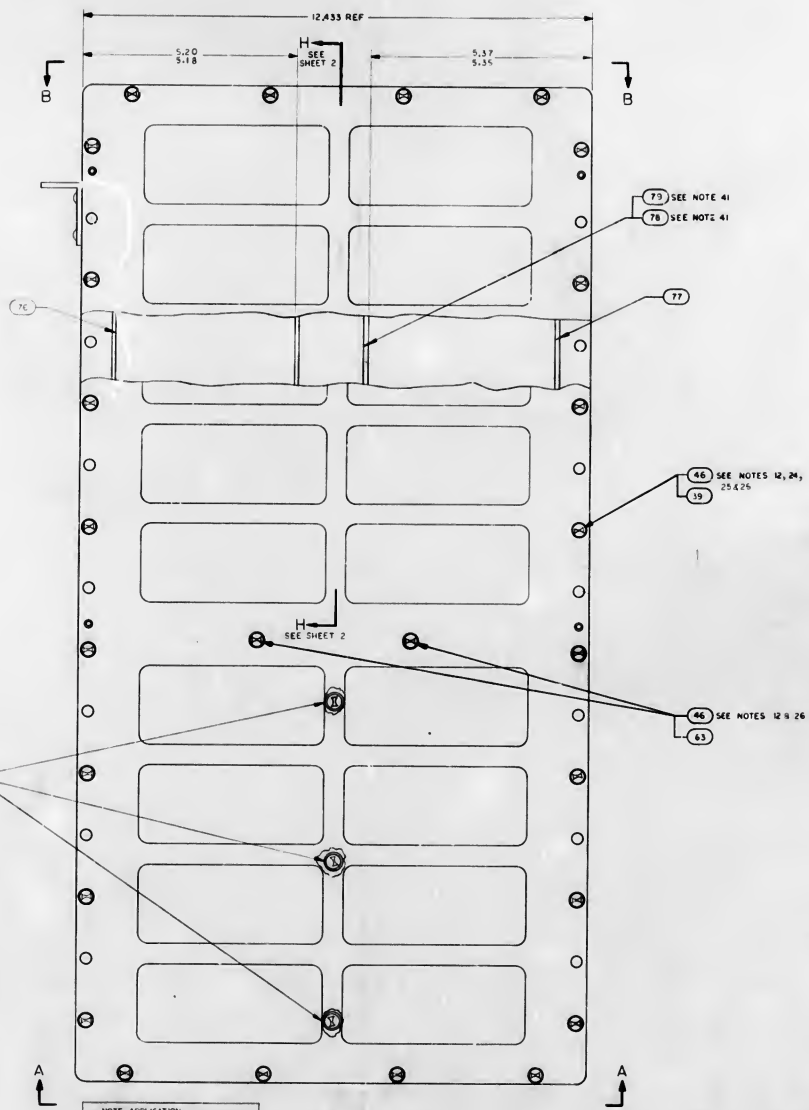

NOTE APPLICATION	
DASH NO.	NOTES APPLICABLE
-011	1 THRU 34, 37, 43 & 44 & 45
-021	1 THRU 35, 37, 43, 44 & 45
-031	1 THRU 34, 36 & 39 THRU 45
-041	1 THRU 34, 37, 38, 39 THRU 45

QTY				PART OR IDENTIFYING NO	NOMENCLATURE OR DESCRIPTION	FIND NO
4	4	4	4	1010485-432	SCREW, NYLON	84
11	11	11	11	1010485-332	SCREW, NYLON	83
6	6	6	6	1010485-235	SCREW, NYLON	82
28	28	28	28	1010485-100	SCREW, NYLON	81
AR	AR	AR	AR	1006338-003	SEALING COMPOUND, SILICONE RUBBER	80
1	1	—	—	2004691	SHIM, VIBRATION DAMPENING	79
1	1	—	—	2004690	PAD, VIBRATION DAMPENING	78
1	1	—	—	2004699-017	PAD, VIBRATION	77
1	1	—	—	2004699-006	PAD, VIBRATION	76
~~AR~~	~~—~~	~~—~~	~~—~~	~~2004699-012~~	~~SHIM AGC~~	75
~~AR~~	~~—~~	~~—~~	~~—~~	~~2004699-011~~	~~SHIM AGC~~	74
1	1	—	—	2003092-041	TRAY A WIRED ASSY	73
AR	AR	AR	AR	2004901	SHIM AGC	72
AR	AR	AR	AR	2010800-000	SHIM	71
X	X	X	X	2005944	AGC WIRE LIST	REF
AR	AR	AR	AR	MIL-S-16640	SILICONE COMPOUND	70
2	2	2	—	2003892-011	POWER SUPPLY MODULE A30-31	69
—	—	1	—	SEE NOTE 35	TRAY A WIRED ASSY	68
33	33	33	33	2004732-002	SCREW, COATED	67
~~AR~~	~~AR~~	~~AR~~	~~AR~~	~~1006338-003~~	~~SEALING COMPOUND, SILICONE RUBBER~~	66
AR	AR	AR	AR	1006776-22	INSULATION, SLEEVING, ELECTRICAL	65
1	1	1	1	SEE NOTE 10	CAPACITOR	64
10	10	10	10	2004148-007	WASHER, FLAT	63
1	1	1	1	SEE NOTE 31	SENSE AMPLIFIER MODULE, FIXED MEMORY B14	62
~~—~~	~~—~~	~~1~~	~~1~~	~~2004899-004~~	~~SHIM AGC~~	61
~~—~~	~~—~~	~~1~~	~~1~~	~~2004899-001~~	~~SHIM AGC~~	60
—	—	1	1	2004899-001	PAD, VIBRATION	59
1	1	1	1	2003970	VIBRATION TRD ASSY	58
4	4	4	4	NAS1598-D08N	WASHER, SEALING	57
1	1	1	1	2018773	VALVE, PRESSURE ASSEMBLY	56
1	1	1	1	1000159-5	PACKING, PREFORMED "O" RING	55
2	2	2	2	2004984-001	WASHER, FLAT	54
6	6	6	6	2004159	PAD, THREADED	53
18	18	18	18	2004894-014	WASHER, FLAT	52
4	4	4	4	2004894-012	WASHER, FLAT	51
2	2	2	2	1000469-36	SCREW, HEX SOCKET HEAD	50
4	4	4	4	1004722-2	SCREW, CAPTIVE	49
1	1	1	1	1000159-7	PACKING, PREFORMED "O" RING	48
18	18	18	18	2004732-005	SCREW, COATED	47
33	33	33	33	2004732-001	SCREW, COATED	46
2	2	2	2	1006347	GASKET, PLATE	45
1	1	1	1	2004986	PLUG, MACHINE THREAD	44
1	1	1	1	1004260-19	NAME PLATE, TYPE 1	43
1	1	1	1	2004113-001	BRACKET, CABLE	42
1	1	1	1	2003099-011	CONNECTOR ASSEMBLY	41
1	1	1	1	1006380	GASKET, RETAINED	40
58	58	58	58	2004717	WASHER, KNURLED	39
3	3	3	3	2003067-041	INTERFACE MODULE A27-29	38
2	2	2	2	2003070-031	INTERFACE MODULE A25-26	37
—	—	—	2	2003887-011	POWER SUPPLY MODULE A30-31	36
1	1	1	1	SEE NOTES 36 & 37	LOGIC MODULE A24	35
1	1	1	1		LOGIC MODULE A23	34
1	1	1	1		LOGIC MODULE A22	33
1	1	1	1		LOGIC MODULE A21	32
1	1	1	1		LOGIC MODULE A20	31
1	1	1	1		LOGIC MODULE A19	30
1	1	1	1		LOGIC MODULE A18	29
1	1	1	1		LOGIC MODULE A17	28
1	1	1	1		LOGIC MODULE A16	27
1	1	1	1		LOGIC MODULE A15	26
1	1	1	1		LOGIC MODULE A14	25
1	1	1	1		LOGIC MODULE A13	24
1	1	1	1		LOGIC MODULE A12	23
4	4	4	4		LOGIC MODULE A8-11	22
1	1	1	1		LOGIC MODULE A7	21
1	1	1	1		LOGIC MODULE A6	20
1	1	1	1		LOGIC MODULE A5	19
1	1	1	1		LOGIC MODULE A4	18
1	1	1	1		LOGIC MODULE A3	17
1	1	1	1		LOGIC MODULE A2	16
1	1	1	1	SEE NOTES 36 & 37	LOGIC MODULE A1	15
2	2	2	2	2003140-031	ROPE DRIVER MODULE B6-7	14
1	1	1	1	2003027-031	STRAND SELECT MODULE B15	13
1	1	1	1	SEE NOTE 30	SENSE AMPL MOD, ERASABLE MEMORY B13	12
1	1	1	1	2003111-021	ERASABLE MEMORY MODULE B12	11
1	1	1	1	2003026-031	CURRENT SWITCH MODULE B11	10
2	2	2	2	2003114-021	ERASABLE DRIVER MODULE B9-10	9
1	1	1	1	2003083-021	ALARM MODULE B8	8
—	1	1	1	2003036-031	OSCILLATOR MODULE B7	7
1	1	1	1	2003978-001	MID SPACER	6
1	1	1	1	2003059-021	INTERCONNECTION HEADER ASSEMBLY	5
1	1	1	1	2003976-011	TRAY B COVER	4
1	1	1	1	2003977-011	TRAY A COVER	3
1	1	1	1	2003093-021	TRAY B WIRED ASSEMBLY	2
—	—	1	1	2003092-031	TRAY A WIRED ASSEMBLY	1

LIST OF MATERIALS

UNLESS OTHERWISE SPECIFIED DIMENSIONS ARE IN INCHES CAPACITOR VALUES ARE IN µf RESISTO. VALUES ARE IN OHMS TOLERANCES ON FRACTIONS DECIMALS ANGLES ± — ± — ± — DO NOT SCALE THIS DRAWING.

MATERIAL —

2003991

NEXT ASSY | USED ON

APPLICATION

MIT INSTRUMENTATION LAB CAMBRIDGE MASS.

DRAWN
CHECKED
APPROVED
APPROVED

APPROVED MIT
APPROVED NASA
APPROVED MSC

MANNED SPACECRAFT CENTER
HOUSTON TEXAS

COMPUTER ASSEMBLY

CODE IDENT NO 80230 | SIZE J | DRAWING NO 2003993

SCALE — | SHEET 1 OF 2

C1	
PART NO.	VALUE UUF
1006777-1	10
-15	150
-18	330
-20	470
-22	680
1006777-23	820
SEE NOTE 21	0
1006777-6	220
1006777-17	270

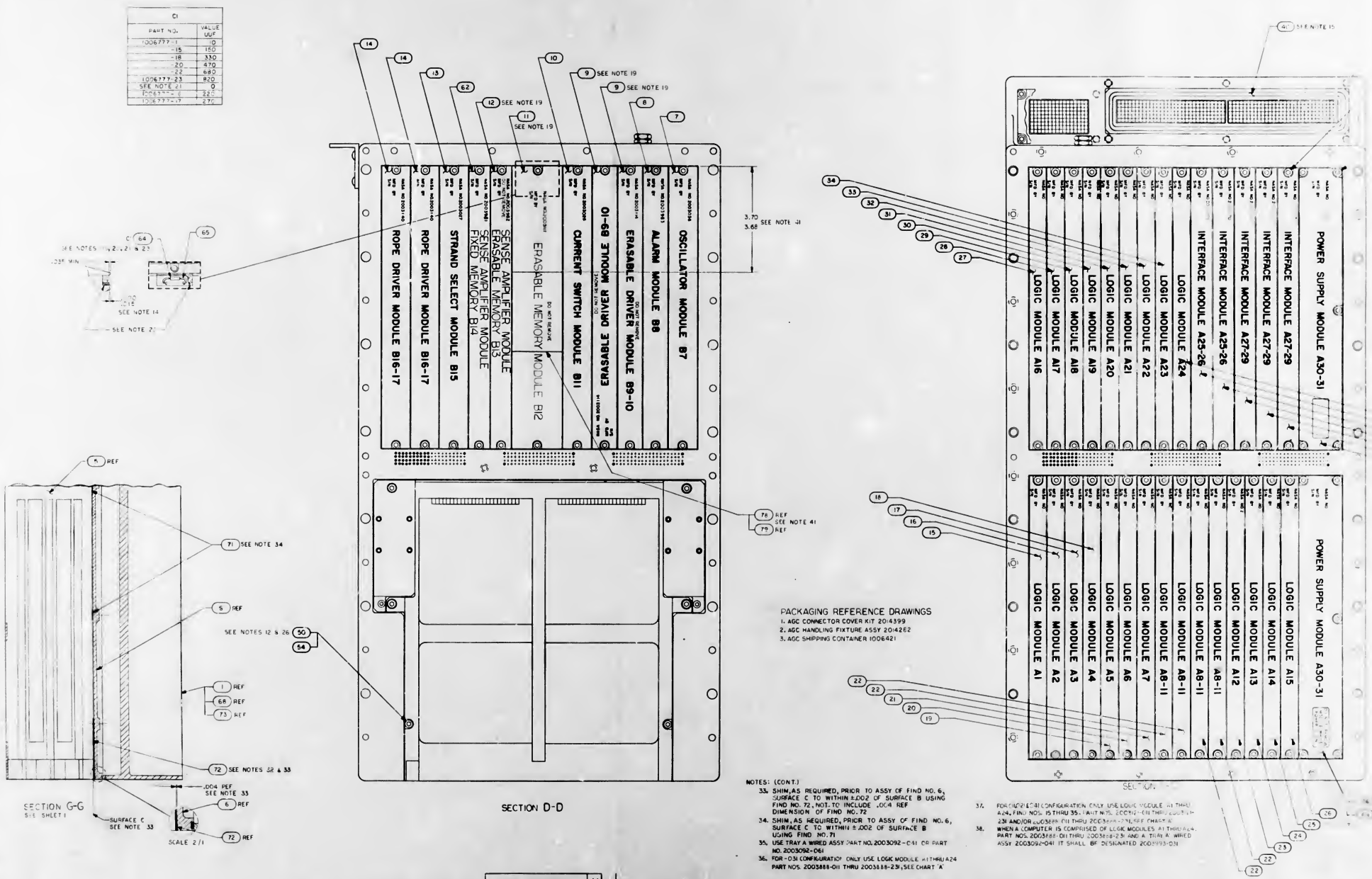

PACKAGING REFERENCE DRAWINGS

1. AGC CONNECTOR COVER KIT 2014399
2. AGC HANDLING FIXTURE ASSY 2014262
3. AGC SHIPPING CONTAINER 1006421

NOTES: (CONT.)

33. SHIM, AS REQUIRED, PRIOR TO ASSY OF FIND NO. 6, SURFACE C TO WITHIN ±.002 OF SURFACE B USING FIND NO. 72, NOT TO INCLUDE .004 REF DIMENSION OF FIND NO. 72
34. SHIM, AS REQUIRED, PRIOR TO ASSY OF FIND NO. 6, SURFACE C TO WITHIN ±.002 OF SURFACE B USING FIND NO. 71
35. USE TRAY A WIRED ASSY PART NO. 2003092-041 OR PART NO. 2003092-061
36. FOR -031 CONFIGURATION ONLY USE LOGIC MODULE A1 THRU A24 PART NOS. 2003888-011 THRU 2003888-231, SEE CHART 'A'
37. FOR -031 & -041 CONFIGURATION ONLY USE LOGIC MODULE A1 THRU A24, FIND NOS. 15 THRU 35. PART NOS. 2003888-011 THRU 2003888-231 AND/OR 2003888-011 THRU 2003888-271, SEE CHART 'A'
38. WHEN A COMPUTER IS COMPRISED OF LOGIC MODULES A1 THRU A24, PART NOS. 2003888-011 THRU 2003888-231 AND A TRAY A WIRED ASSY 2003092-041 IT SHALL BE DESIGNATED 2003993-031

2003993 K

REVISIONS						
SYM	ZONE	DESCRIPTION	DR	CHK	DATE	APPROVED
A		[illegible] TDRR 32558				
B		RELEASED PER TDRR 32965				
		[illegible]				
		REVISED PER TDRR 33106				
		[illegible] 5				
F		REVISED PER TDRR 3363-				
G		REVISED PER TDRR 34265				
H		REVISED PER TDRR 34285				
J		REVISED PER TDRR 34359				
K		REVISED PER TDRR [illegible]				

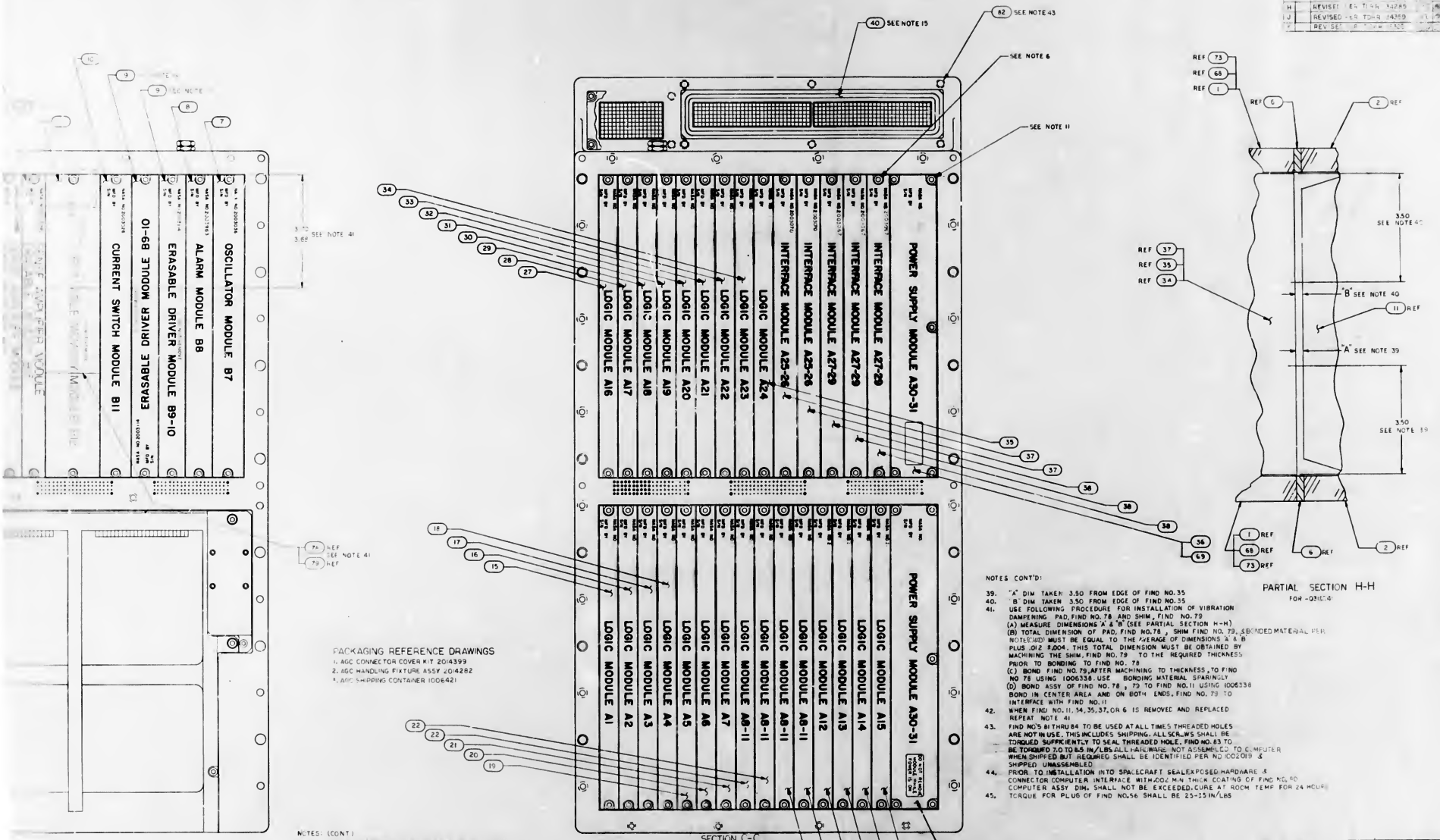

PARTIAL SECTION H-H
FOR -031&041

PACKAGING REFERENCE DRAWINGS
1. AGC CONNECTOR COVER KIT 2014399
2. AGC HANDLING FIXTURE ASSY 2014282
3. AGC SHIPPING CONTAINER 1006421

NOTES: (CONT)

33. SHIM, AS REQUIRED, PRIOR TO ASSY OF FIND NO. 6, SURFACE C TO WITHIN ±.002 OF SURFACE B USING FIND NO 72, NOT TO INCLUDE .004 REF DIMENSION OF FIND NO. 72
34. SHIM, AS REQUIRED, PRIOR TO ASSY OF FIND NO. 6, SURFACE C TO WITHIN ±.002 OF SURFACE B USING FIND NO 71
35. USE TRAY A WIRED ASSY PART NO. 2003092-041 OR PART NO. 2003092-061
36. FOR -031 CONFIGURATION ONLY USE LOGIC MODULE A1 THRU A24 PART NOS 2003888-011 THRU 2003888-231, SEE CHART 'A'
37. FOR -021 & -041 CONFIGURATION ONLY USE LOGIC MODULE A1 THRU A24, FIND NOS. 15 THRU 35, PART NOS. 2003121-011 THRU 2003121-231 AND/OR 2003888-011 THRU 2003888-231, SEE CHART 'A'
38. WHEN A COMPUTER IS COMPRISED OF LOGIC MODULES A1 THRU A24, PART NOS. 2003888-011 THRU 2003888-231 AND A TRAY 'A' WIRED ASSY 2003092-041 IT SHALL BE DESIGNATED 2003993-031

NOTES CONT'D:

39. "A" DIM TAKEN 3.50 FROM EDGE OF FIND NO. 35
40. "B" DIM TAKEN 3.50 FROM EDGE OF FIND NO. 35
41. USE FOLLOWING PROCEDURE FOR INSTALLATION OF VIBRATION DAMPENING PAD, FIND NO. 78 AND SHIM, FIND NO. 79
    (A) MEASURE DIMENSIONS 'A' & 'B' (SEE PARTIAL SECTION H-H)
    (B) TOTAL DIMENSION OF PAD, FIND NO. 78, SHIM FIND NO. 79, & BONDED MATERIAL PER NOTE (C&D) MUST BE EQUAL TO THE AVERAGE OF DIMENSIONS 'A' & 'B' PLUS .012 ±.004. THIS TOTAL DIMENSION MUST BE OBTAINED BY MACHINING THE SHIM, FIND NO. 79 TO THE REQUIRED THICKNESS PRIOR TO BONDING TO FIND NO. 78
    (C) BOND FIND NO. 79, AFTER MACHINING TO THICKNESS, TO FIND NO 78 USING 1006338. USE BONDING MATERIAL SPARINGLY
    (D) BOND ASSY OF FIND NO. 78, 79 TO FIND NO. 11 USING 1006338 BOND IN CENTER AREA AND ON BOTH ENDS. FIND NO. 79 TO INTERFACE WITH FIND NO. 11
42. WHEN FIND NO. 11, 34, 35, 37, OR 6 IS REMOVED AND REPLACED REPEAT NOTE 41
43. FIND NO'S 81 THRU 84 TO BE USED AT ALL TIMES THREADED HOLES ARE NOT IN USE. THIS INCLUDES SHIPPING. ALL SCREWS SHALL BE TORQUED SUFFICIENTLY TO SEAL THREADED HOLE. FIND NO. 83 TO BE TORQUED 7.0 TO 8.5 IN/LBS ALL HARDWARE NOT ASSEMBLED TO COMPUTER WHEN SHIPPED BUT REQUIRED SHALL BE IDENTIFIED PER ND 1002019 & SHIPPED UNASSEMBLED
44. PRIOR TO INSTALLATION INTO SPACECRAFT SEAL EXPOSED HARDWARE & CONNECTOR COMPUTER INTERFACE WITH .002 MIN THICK COATING OF FIND NO. 80 COMPUTER ASSY DIM. SHALL NOT BE EXCEEDED. CURE AT ROOM TEMP FOR 24 HOURS
45. TORQUE FOR PLUG OF FIND NO. 56 SHALL BE 25-35 IN/LBS

QTY REQD	PART OR IDENTIFYING NO	NOMENCLATURE OR DESCRIPTION	FIND NO
LIST OF MATERIALS			

NEXT ASSY	USED ON
APPLICATION	

UNLESS OTHERWISE SPECIFIED
DIMENSIONS ARE IN INCHES
CAPACITOR VALUES ARE IN μf
RESISTOR VALUES ARE IN OHMS
TOLERANCES ON
FRACTIONS DECIMALS ANGLES
± — ± — ± —
DO NOT SCALE THIS DRAWING
MATERIAL —

MIT
INSTRUMENTATION LAB
CAMBRIDGE MASS

DRAWN
CHECKED
APPROVED
APPROVED
APPROVED NASA
APPROVED NASA
DATE

MANNED SPACECRAFT CENTER
HOUSTON, TEXAS

COMPUTER
ASSEMBLY

CODE IDENT NO	SIZE	DRAWING NO
80230	J	2003993

SCALE 1/1
SHEET 2 OF 2

2003993 KE2/2 SH2/2

CHART A SEE NOTES 36&37			
PART NO.FOR-OR-OBA (SEE PARTS LIST)	PART NO.FOR-OR-OBA (SEE PARTS LIST)	MODULES	
2003121 -011	2003888 -011	LOGIC MODULE	A1
-021	-021		A2
-031	-031		A3
-041	-041		A4
-051	-051		A5
-061	-061		A6
-071	-071		A7
-081	-081		A8-A11
-091	-091		A12
-111	-111		A13
-121	-121		A14
-131	-131		A15
-141	-141		A16
-151	-151		A17
-161	-161		A18
-171	-171		A19
-181	-181		A20
-191	-191		A21
-211	-211		A22
-221	-221		A23
2003121 -231	2003888 -231	LOGIC MODULE	A24

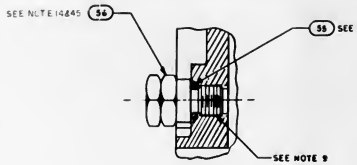

PARTIAL SECTION F F
SCALE: 2/1

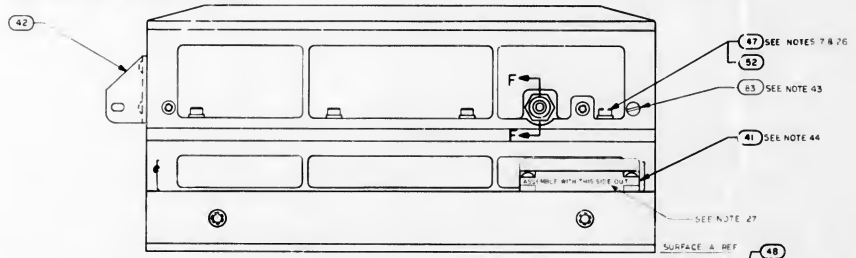

VIEW B-B

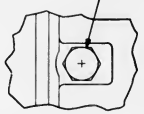

VIEW E-E

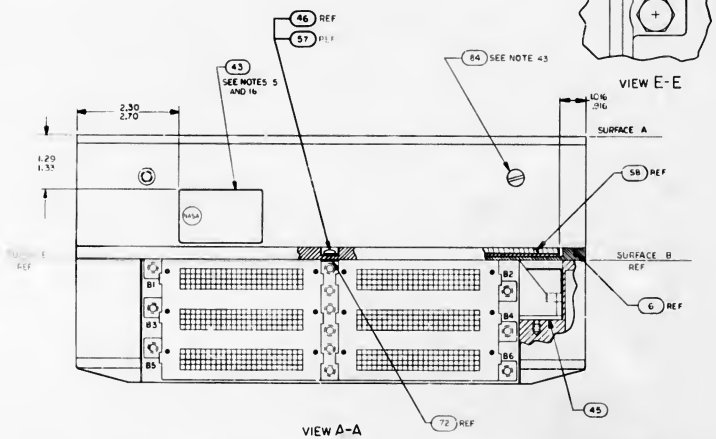

VIEW A-A

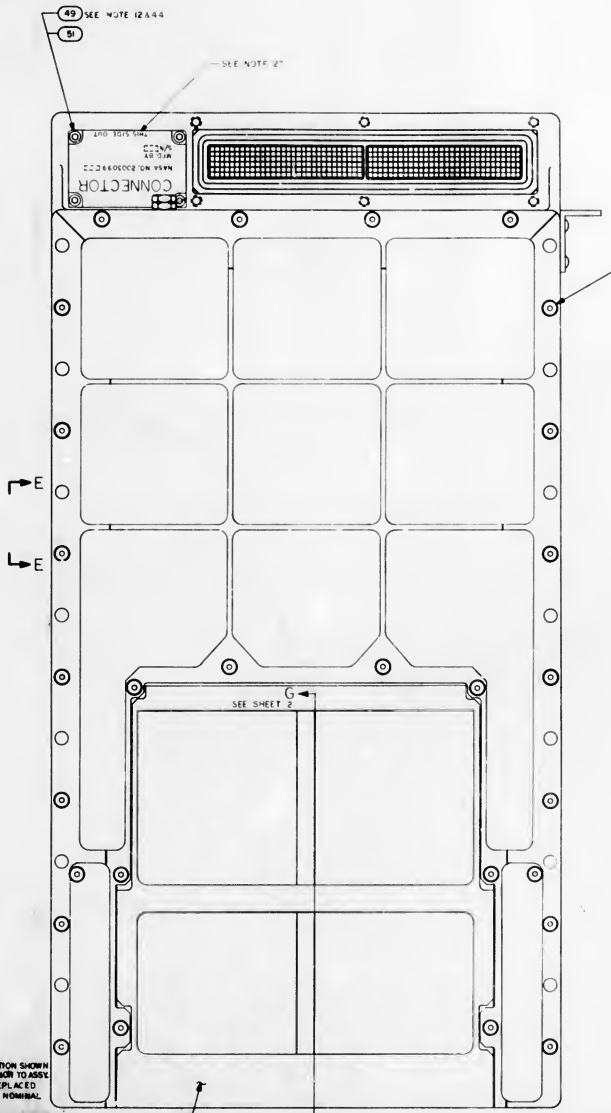

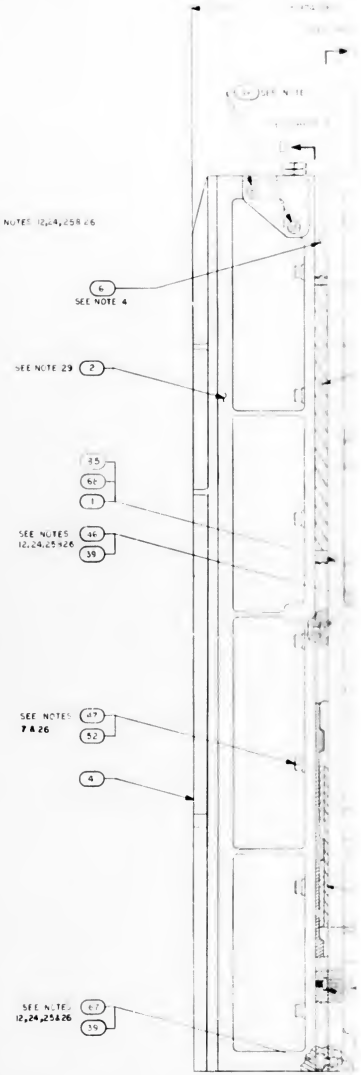

NOTES:
1. INTERPRET DRAWING IN ACCORDANCE WITH STANDARDS PRESCRIBED BY MIL-D-70327
2. PHANTOM LINES DENOTE AGC COLDPLATE AND HANDLING FIXTURE TO BE SUPPLIED BY NORTH AMERICAN AVIATION, INC
3. ADD SILICONE COMPOUND 1006879 TO MODULE MATING METAL SURFACES AND TRAY MATING SURFACES
4. ASSEMBLE FIND NO 53 AND FIND NO 63 TO FIND NO 6 AND FIND NO 6 TO FIND NO 2 PRIOR TO ASSEMBLY OF FIND NO 2 TO FIND NO 1 OR FIND NO 68 OR FIND NO 95
5. BOND FIND NO 43 TO FIND NO 1 OR FIND NO 68 OR FIND NO 95 PER NO1002219, METHOD II
6. UNLESS OTHERWISE SPECIFIED TORQUE ALL MODULE MOUNTING SCREWS 15/19 INCH POUNDS
7. TORQUE FIND NO 4 TO 28/32 INCH POUNDS
8. FINISH IS ~~REQUIRED TO SATISFY ECO 6465-510-1000~~
9. APPLY SEALING COMPOUND MIL-S-22473 GRADE H TO FIND NO 53, FIND NO 56 AND FIND NO 44
10. COMPLETED ASSEMBLY SHALL BE TESTED IN ACCORDANCE WITH AND SHALL MEET ALL THE REQUIREMENTS OF PS2016007
11. TORQUE FOR FIND NO 36 AND FIND NO 69 MOUNTING SCREWS TO BE 10/12 INCH POUNDS
12. TORQUE FOR FIND NO 46, 49, 50 AND 67 TO BE 18/22 INCH POUNDS
13. TORQUE FOR FIND NO 53 TO BE 4/6 INCH POUNDS
14. TORQUE FOR FIND NO 44 AND FIND NO 56 TO BE 137/157 INCH POUNDS
15. FIND NO 40 SHALL BE SUPPLIED AS PART OF THIS ASSEMBLY
16. MARK COMPUTER ASSEMBLY AND RELATED PART NO., APPLICABLE DASH NO., SERIAL NO. AND CONTRACT NO. PER 1004260 AND SERIALIZE PER NO1002023
17. FINISH SURFACE A PER ICD NAA WHOI-01502-116 THIS ASSEMBLY MUST BE CAPABLE OF MEETING ELECTRICAL BONDING REQUIREMENTS OF ICD NAA WHOI-01502-116
18. BOND FIND NO. 58 TO FIND NO. 6 IN POSITION SHOWN USING 1006338 CURE AT ROOM TEMP 24 HRS PRIOR TO ASSY.
19. REFERENCED MODULES MUST NOT BE REPLACED OR INTERCHANGED WITHOUT REPEATING NOMINAL SELECTION PROCEDURE PER NOTE 10
20. THE VALUE OF C1 TO BE DETERMINED AT ELECTRICAL TEST AND SELECTED FROM APPROPRIATE CHART
21. WHEN THE VALUE OF C1 IS ZERO NO COMPONENT SHALL BE USED
22. ENCAPSULATE AREA SHOWN AFTER SELECTION AND INSTALLATION OF C1 USING NO1002009 METHOD C OR D USING PRIMER PER SCD02593
23. WELD PER NO1002005
24. ASSEMBLE HARDWARE WITH SMOOTH FACE OF FIND NO. 39 IN CONTACT WITH SCREW HEAD
25. FIND NO 39, 40, 41, 42, 57, 58 MAY BE DISCARDED AND REPLACED WITH NEW PARTS EACH TIME THEY ARE DISASSEMBLED
26. SEAL EXPOSED HARDWARE ASSEMBLIES WITH .002 MIN THICK COATING OF FIND NO 90 OVERALL COMPUTER ASSEMBLY DIMENSIONS SHALL NOT BE EXCEEDED. CURE AT ROOM TEMP 24 HRS
27. STENCILING SHOWN FOR ORIENTATION ONLY
28. KEEP ALL MATING THREADS OF SCREWS, TRAY AND MID SPACER INSERTS FREE OF SILICONE COMPOUND
29. FILL FEMALE INSULATORS OF B41 AND B42 CONNECTORS USING FIND NO. 70 PRIOR TO ASSEMBLY OF FIND NO. 5 TO FIND NO. 2
30. FIND NO. 12 ERASEABLE MEMORY, [illegible] USE EITHER 2003[illegible] PER 19[illegible]
31. FIND NO. 62 [illegible] MEMORY [illegible] USE EITHER 2[illegible]
32. BOND FIND NO. [illegible] TO FIND NO. 5 PER NO[illegible] TYPE 2 PRIOR TO ASSEMBLY OF FIND NO. [illegible]
33. SEE SHEET 2
34. SEE SHEET 2
35. SEE SHEET 2
36. SEE SHEET 2
37. SEE SHEET 2
38. SEE SHEET 2
39. SEE SHEET 2
40. SEE SHEET 2
41. SEE SHEET 2
42. SEE SHEET 2

2003993 L

SH1/2 2003993 LF1/2

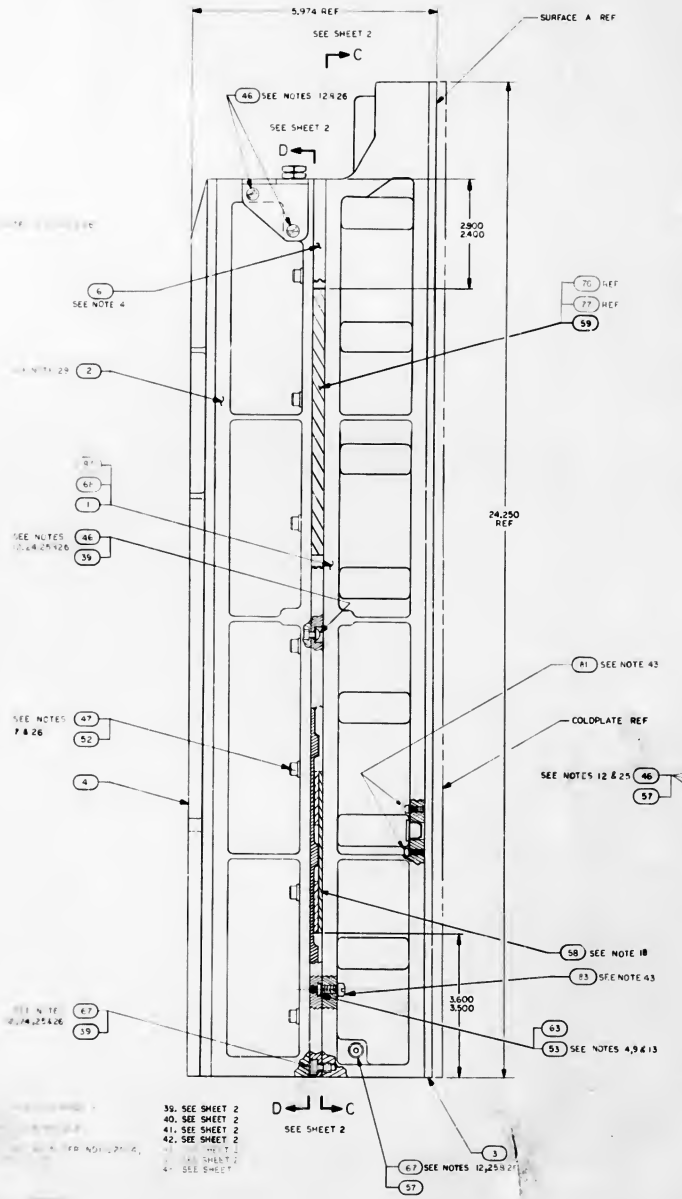

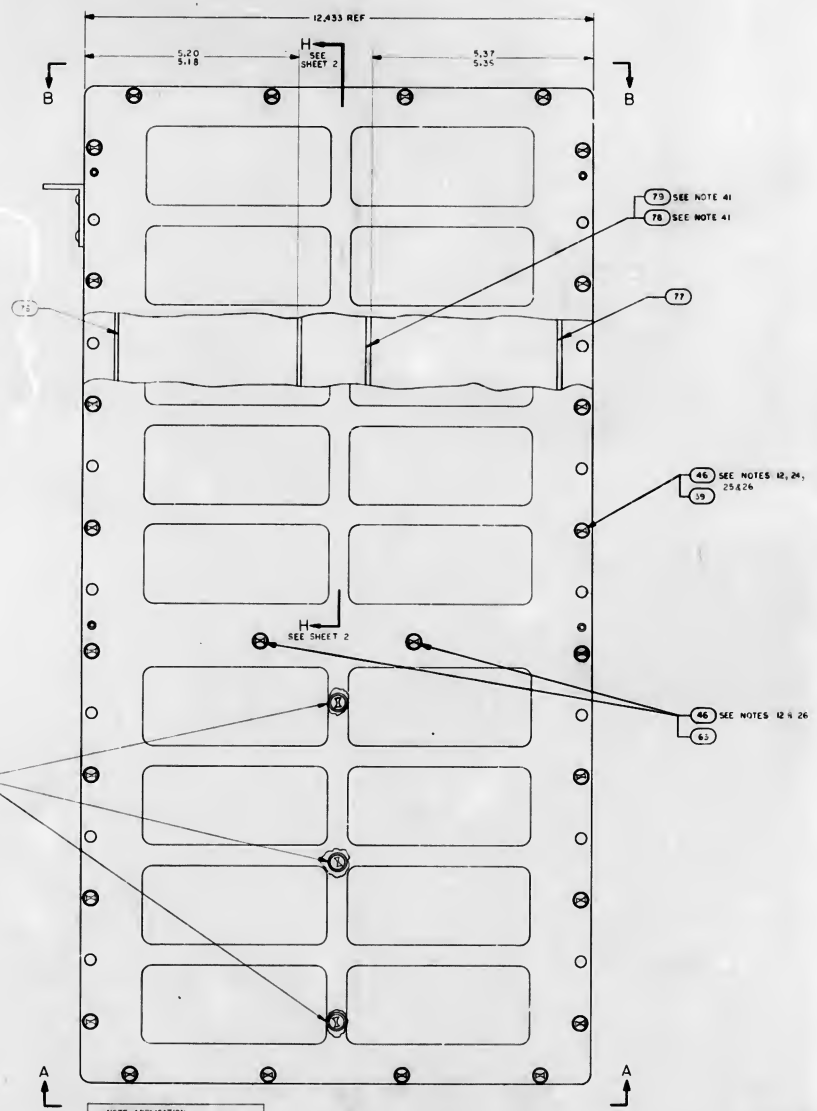

NOTE APPLICATION	
DASH NO.	NOTES APPLICABLE
-011	1 THRU 34, 37, 43 & 44 & 45
-021	1 THRU 35, 37, 43, 44 & 45
-031	1 THRU 34, 36 & 39 THRU 45
-041	1 THRU 34, 37 & 39 THRU 45

REVISIONS					
SYM	ZONE	DESCRIPTION	DR	CHK	DATE	APPROVED
A		[illegible]				
B		[illegible]				
C		[illegible]				
D		[illegible]				
E		[illegible]				
F		REVISED PER TDRR [illegible]				
G		REVISED PER TDRR 34265				
H		REVISED PER TDRR [illegible]				
J		REVISED PER TDRR [illegible]				
K		[illegible]				
L		[illegible]				

QTY REQD				PART OR IDENTIFYING NO	NOMENCLATURE OR DESCRIPTION	FIND NO
4	4	4	4	1010485-132	SCREW, NYLON	94
11	11	11	11	1010485-332	SCREW, NYLON	93
5	6	6	6	1010485-235	SCREW, NYLON	92
28	28	28	28	1010485-100	SCREW, NYLON	91
AR	AR	AR	AR	1006338-003	SEALING COMPOUND, SILICONE RUBBER	90
				2004691	SHIM VIBRATION DAMPENING	89
	1	—	—	2004610	PAD VIBRATION DAMPENING	88
	1	—	—	2004899-007	PAD VIBRATION	87
	1	—	—	2004899-006	PAD VIBRATION	86
	AR	—	—	2004899-002	SHIM AGC	85
	AR	—	—	2004899-001	SHIM AGC	84
—	1	—	—	2005098-001	TRAY A WIRED ASSY	83
AR	AR	AR	AR	2010801	SHIM AGC	82
AR	AR	AR	AR	2010800-000	SHIM	81
				2005944	AGC WIRE LIST	REF
AR	AR	AR	AR	MIL-S-8660	SILICONE COMPOUND	70
1	2	2	—	2003892-011	POWER SUPPLY MODULE A30-31	69
	—	1	—	SEE NOTE 20	TRAY A WIRED ASSY	68
33	33	33	33	2004732-002	SCREW, COATED	67
	48	48	48	2004898-006	FACING COMPOUND, SILICONE RUBBER	66
AR	AR	AR	AR	1001776-22	INSULATION, SLEEVING, ELECTRICAL	65
1	1	1	1	SEE NOTE 30	CAPACITOR	64
10	10	10	10	2004148-007	WASHER, FLAT	63
1	1	1	1	SEE NOTE 31	SENSE AMPLIFIER MODULE, FIXED MEMORY B14	62
	2	2	2	2004899-004	SHIM AGC	61
	2	2	2	2004899-001	SHIM AGC	60
—	—	1	1	2004899-001	PAD VIBRATION	59
1	1	1	1	2003970	VIBRATION PAD ASSY	58
4	4	4	4	NAS598-008N	WASHER, SEALING	57
1	1	1	1	2018773	VALVE, PRESSURE ASSEMBLY	56
1	1	1	1	1000159-5	PACKING, PREFORMED "O" RING	55
2	2	2	2	2004984-001	WASHER, FLAT	54
8	8	8	8	2004430	PAD, THREADED	53
18	18	18	18	2004894-014	WASHER, FLAT	52
4	4	4	4	2004894-012	WASHER, FLAT	51
2	2	2	2	800469-36	SCREW, HEX SOCKET HEAD	50
4	4	4	4	1004722-2	SCREW, CAPTIVE	49
1	1	1	1	1000159-7	PACKING, PREFORMED "O" RING	48
18	18	18	18	2004732-003	SCREW, COATED	47
33	33	33	33	2004732-001	SCREW, COATED	46
2	2	2	2	1006347	GASKET, PLATE	45
1	1	1	1	2004986	PLUG, MACHINE THREAD	44
1	1	1	1	1004260-19	NAME PLATE, TYPE X	43
1	1	1	1	2004113-001	BRACKET, CABLE	42
1	1	1	1	2003099-011	CONNECTOR ASSEMBLY	41
1	1	1	1	1006380	GASKET, RETAINED	40
58	58	58	58	2004717	WASHER, KNURLED	39
3	3	3	3	2003067-041	INTERFACE MODULE A27-29	38
2	2	2	2	2003070-031	INTERFACE MODULE A25-26	37
—	—	—	2	2003887-011	POWER SUPPLY MODULE A30-31	36
1	1	1	1	SEE NOTES 36 & 37	LOGIC MODULE A24	35
1	1	1	1		LOGIC MODULE A23	34
1	1	1	1		LOGIC MODULE A22	33
1	1	1	1		LOGIC MODULE A21	32
1	1	1	1		LOGIC MODULE A20	31
1	1	1	1		LOGIC MODULE A19	30
1	1	1	1		LOGIC MODULE A18	29
1	1	1	1		LOGIC MODULE A17	28
1	1	1	1		LOGIC MODULE A16	27
1	1	1	1		LOGIC MODULE A15	26
1	1	1	1		LOGIC MODULE A14	25
1	1	1	1		LOGIC MODULE A13	24
1	1	1	1		LOGIC MODULE A12	23
4	4	4	4		LOGIC MODULE AB-11	22
1	1	1	1		LOGIC MODULE A7	21
1	1	1	1		LOGIC MODULE A6	20
1	1	1	1		LOGIC MODULE A5	19
1	1	1	1		LOGIC MODULE A4	18
1	1	1	1		LOGIC MODULE A3	17
1	1	1	1		LOGIC MODULE A2	16
1	1	1	1	SEE NOTES 36 & 37	LOGIC MODULE A1	15
2	2	2	2	2003140-031	ROPE DRIVER MODULE B16-17	14
1	1	1	1	2003027-031	STRAND SELECT MODULE B15	13
1	1	1	1	SEE NOTE 30	SENSE AMPL MOD, ERASABLE MEMORY B13	12
1	1	1	1	2003111-021	ERASABLE MEMORY MODULE B12	11
1	1	1	1	2003026-031	CURRENT SWITCH MODULE B11	10
2	2	2	2	2003114-021	ERASABLE DRIVER MODULE B9-10	9
1	1	1	1	2003113-021	ALARM MODULE B8	8
1	1	1	1	2003036-031	OSCILLATOR MODULE B7	7
1	1	1	1	2003978-001	MID SPACER	6
1	1	1	1	2003059-021	INTERCONNECTION HEADER ASSEMBLY	5
1	1	1	1	2003976-011	TRAY B COVER	4
1	1	1	1	2003977-011	TRAY A COVER	3
1	1	1	1	2003093-021	TRAY B WIRED ASSEMBLY	2
1	1	1	1	2003092-031	TRAY A WIRED ASSEMBLY	1

LIST OF MATERIALS

UNLESS OTHERWISE SPECIFIED DIMENSIONS ARE IN INCHES
CAPACITOR VALUES ARE IN µf
RESISTOR VALUES ARE IN OHMS
TOLERANCES ON
FRACTIONS DECIMALS ANGLES
± ± ±
DO NOT SCALE THIS DRAWING
MATERIAL

NEXT ASSY USED ON
APPLICATION

MIT INSTRUMENTATION LAB
CAMBRIDGE MASS

DRAWN
CHECKED
APPROVED
APPROVED
APPROVED MFG
APPROVED QC
DATE

MANNED SPACECRAFT CENTER
HOUSTON TEXAS

COMPUTER ASSEMBLY

CODE IDENT NO 80230 | SIZE J | DRAWING NO 2003993
SCALE 1 | SHEET 1 OF 2

993 | 1

SH1/2 2003993 L52/2

C1	
PART NO.	VALUE UUF
1006777-1	10
-15	150
-18	330
-20	470
-22	680
1006777-23	820
SEE NOTE 21	0
1006777-6	220
1006777-17	270

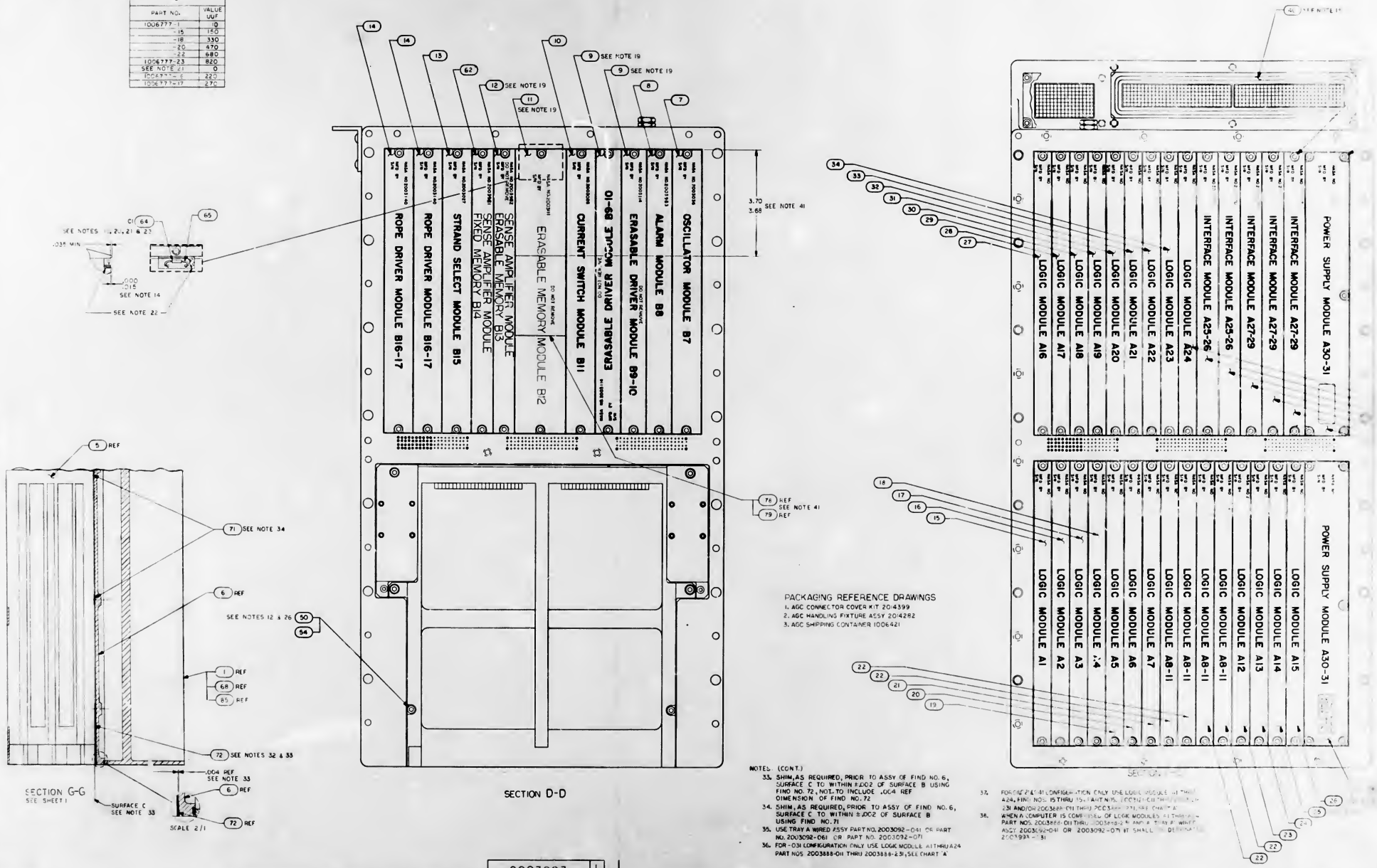

PACKAGING REFERENCE DRAWINGS

1. AGC CONNECTOR COVER KIT 2014399
2. AGC HANDLING FIXTURE ASSY 2014282
3. AGC SHIPPING CONTAINER 1006421

NOTES. (CONT.)

33. SHIM, AS REQUIRED, PRIOR TO ASSY OF FIND NO. 6, SURFACE C TO WITHIN ±.002 OF SURFACE B USING FIND NO. 72, NOT TO INCLUDE .004 REF DIMENSION OF FIND NO. 72
34. SHIM, AS REQUIRED, PRIOR TO ASSY OF FIND NO. 6, SURFACE C TO WITHIN ±.002 OF SURFACE B USING FIND NO. 71
35. USE TRAY & WIRED ASSY PART NO. 2003092-041 OR PART NO. 2003092-061 OR PART NO. 2003092-071
36. FOR -031 CONFIGURATION ONLY USE LOGIC MODULE A1 THRU A24 PART NOS. 2003888-011 THRU 2003888-231, SEE CHART "A"
37. FOR -021 & -041 CONFIGURATION ONLY USE LOGIC MODULE A1 THRU A24, PART NOS. 15 THRU 154 PART NOS. 2003888-011 THRU 2003888-231 AND/OR 2003888-011 THRU 2003888-231, SEE CHART "A"
38. WHEN A COMPUTER IS COMPRISED OF LOGIC MODULES A1 THRU A24 PART NOS. 2003888-011 THRU 2003888-231 AND A TRAY & WIRED ASSY. 2003092-041 OR 2003092-071 IT SHALL BE DESIGNATED 2003993-31

2003993 L

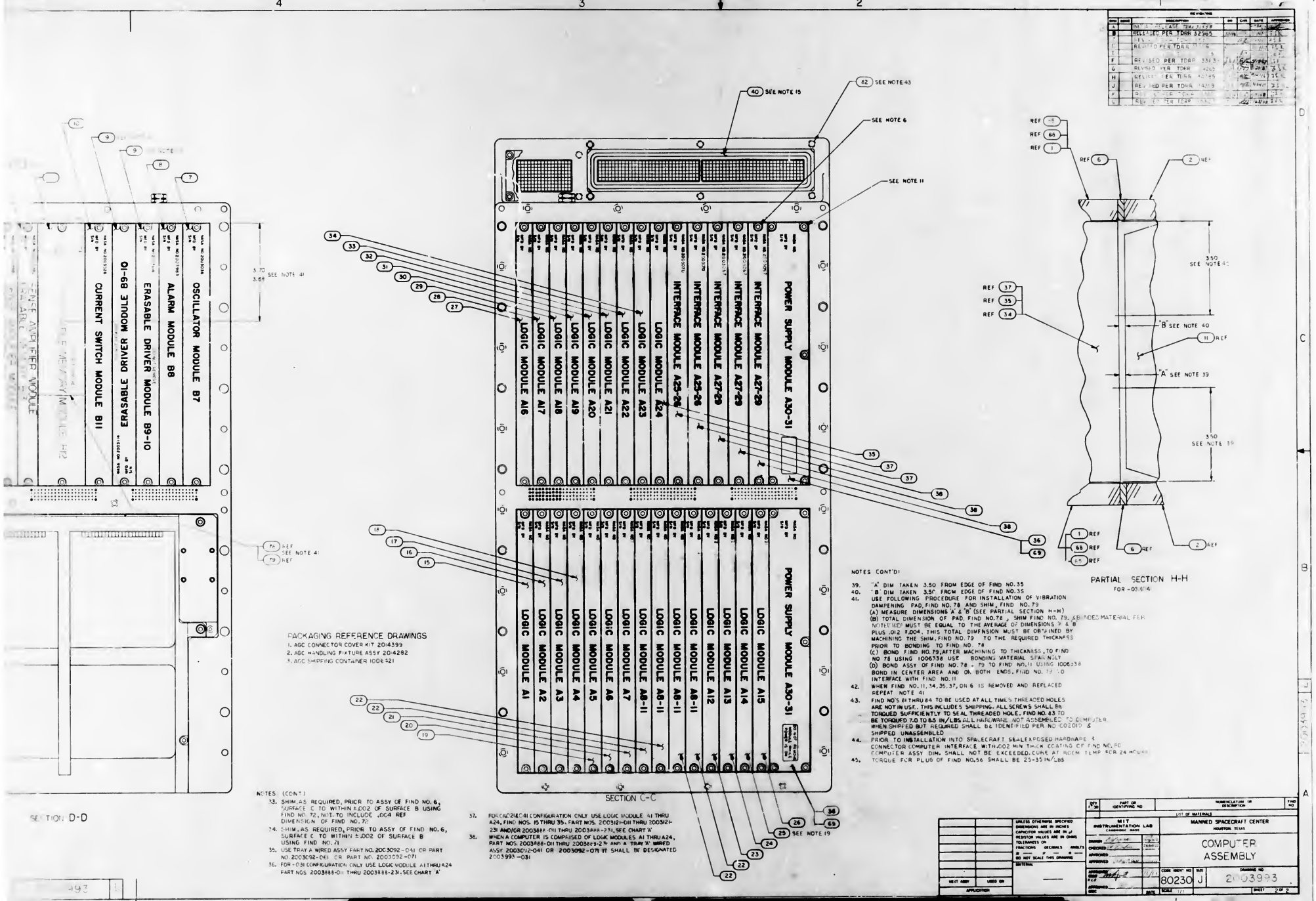
SEE NOTE 15
SEE NOTE 43
SEE NOTE 6
SEE NOTE 11
SEE NOTE 41
SEE NOTE 19
SEE NOTE 40
SEE NOTE 39
REF
LOGIC MODULE A16
LOGIC MODULE A17
LOGIC MODULE A18
LOGIC MODULE A19
LOGIC MODULE A20
LOGIC MODULE A21
LOGIC MODULE A22
LOGIC MODULE A23
LOGIC MODULE A24
INTERFACE MODULE A25-26
INTERFACE MODULE A26-29
INTERFACE MODULE A27-29
INTERFACE MODULE A27-29
POWER SUPPLY MODULE A30-31
LOGIC MODULE A1
LOGIC MODULE A2
LOGIC MODULE A3
LOGIC MODULE A4
LOGIC MODULE A5
LOGIC MODULE A6
LOGIC MODULE A7
LOGIC MODULE A8-11
LOGIC MODULE A12
LOGIC MODULE A13
LOGIC MODULE A14
LOGIC MODULE A15
POWER SUPPLY MODULE A30-31
CURRENT SWITCH MODULE B11
ERASABLE DRIVER MODULE B9-10
ALARM MODULE B8
OSCILLATOR MODULE B7
SECTION C-C
SECTION D-D
PARTIAL SECTION H-H
FOR -031 ONLY
PACKAGING REFERENCE DRAWINGS
1. AGC CONNECTOR COVER KIT 2014399
2. AGC HANDLING FIXTURE ASSY 2014282
3. AGC SHIPPING CONTAINER 1006421
NOTES CONT'D:
39. "A" DIM TAKEN 3.50 FROM EDGE OF FIND NO. 35
40. "B" DIM TAKEN 3.50 FROM EDGE OF FIND NO. 35
41. USE FOLLOWING PROCEDURE FOR INSTALLATION OF VIBRATION DAMPENING PAD, FIND NO. 78 AND SHIM, FIND NO. 79
(A) MEASURE DIMENSIONS "A" & "B" (SEE PARTIAL SECTION H-H)
(B) TOTAL DIMENSION OF PAD, FIND NO. 78, SHIM FIND NO. 79, & BONDED MATERIAL PER NOTE (MD) MUST BE EQUAL TO THE AVERAGE OF DIMENSIONS "A" & "B" PLUS .012 ±.004. THIS TOTAL DIMENSION MUST BE OBTAINED BY MACHINING THE SHIM, FIND NO. 79 TO THE REQUIRED THICKNESS PRIOR TO BONDING TO FIND NO. 78
(C) BOND FIND NO. 79, AFTER MACHINING TO THICKNESS, TO FIND NO. 78 USING 1006338 USE BONDING MATERIAL STAIN ONLY
(D) BOND ASSY OF FIND NO. 78 + 79 TO FIND NO. 11 USING 1006338 BOND IN CENTER AREA AND ON BOTH ENDS. FIND NO. 79 TO INTERFACE WITH FIND NO. 11
42. WHEN FIND NO. 11, 34, 35, 37, OR 6 IS REMOVED AND REPLACED REPEAT NOTE 41
43. FIND NO'S 81 THRU 84 TO BE USED AT ALL TIMES THREADED HOLES ARE NOT IN USE. THIS INCLUDES SHIPPING. ALL SCREWS SHALL BE TORQUED SUFFICIENTLY TO SEAL THREADED HOLE. FIND NO. 83 TO BE TORQUED 7.0 TO 8.5 IN/LBS. ALL HARDWARE NOT ASSEMBLED TO COMPUTER WHEN SHIPPED BUT REQUIRED SHALL BE IDENTIFIED PER NO. 2002013 & SHIPPED UNASSEMBLED
44. PRIOR TO INSTALLATION INTO SPACECRAFT SEAL EXPOSED HARDWARE & CONNECTOR COMPUTER INTERFACE WITH .002 MIN THICK COATING OF FIND NO. 80. COMPUTER ASSY DIM. SHALL NOT BE EXCEEDED. CURE AT ROOM TEMP FOR 24 HOURS
45. TORQUE FOR PLUG OF FIND NO. 56 SHALL BE 25-35 IN/LBS
NOTES (CONT)
33. SHIM, AS REQUIRED, PRIOR TO ASSY OF FIND NO. 6, SURFACE C TO WITHIN ±.002 OF SURFACE B USING FIND NO. 72, NOT TO INCLUDE .004 REF DIMENSION OF FIND NO. 72
34. SHIM, AS REQUIRED, PRIOR TO ASSY OF FIND NO. 6, SURFACE C TO WITHIN ±.002 OF SURFACE B USING FIND NO. 71
35. USE TRAY A WIRED ASSY PART NO. 2003092-041 OR PART NO. 2003092-061 OR PART NO. 2003092-071
36. FOR -031 CONFIGURATION ONLY USE LOGIC MODULE A1 THRU A24 PART NOS. 2003888-011 THRU 2003888-231, SEE CHART "A"
37. FOR 2014041 CONFIGURATION ONLY USE LOGIC MODULE A1 THRU A24, FIND NOS. 15 THRU 35, PART NOS. 2003121-011 THRU 2003121-231 AND/OR 2003888-011 THRU 2003888-231, SEE CHART "A"
38. WHEN A COMPUTER IS COMPRISED OF LOGIC MODULES A1 THRU A24, PART NOS. 2003888-011 THRU 2003889-231 AND A TRAY "A" WIRED ASSY 2003092-041 OR 2003092-071 IT SHALL BE DESIGNATED 2003993-031
MIT INSTRUMENTATION LAB
MANNED SPACECRAFT CENTER
HOUSTON, TEXAS
COMPUTER ASSEMBLY
80230
2003993
SHEET 2 OF 2

CHART A SEE NOTES 36 & 37			
PART NO. FOR [illegible]	PART NO. FOR OR OBA	MODULES	
2003121	-011	2003888	-011	LOGIC MODULE A1
	-021		-021	A2
	-031		-031	A3
	-041		-041	A4
	-051		-051	A5
	-061		-061	A6
	-071		-071	A7
	-081		-081	A8-A11
	-091		-091	A12
	-111		-111	A13
	-121		-121	A14
	-131		-131	A15
	-141		-141	A16
	-151		-151	A17
	-161		-161	A18
	-171		-171	A19
	-181		-181	A20
	-191		-191	A21
	-211		-211	A22
	-221		-221	A23
2003121	-231	2003888	-231	LOGIC MODULE A24

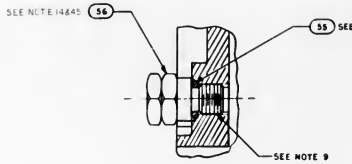

PARTIAL SECTION F F
SCALE: 2/1

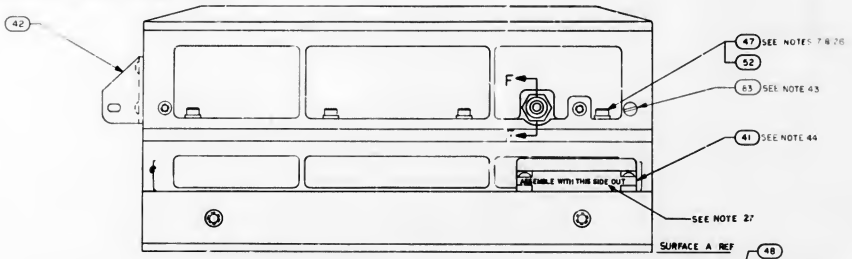

VIEW B-B

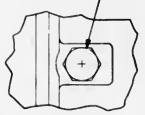

VIEW E-E

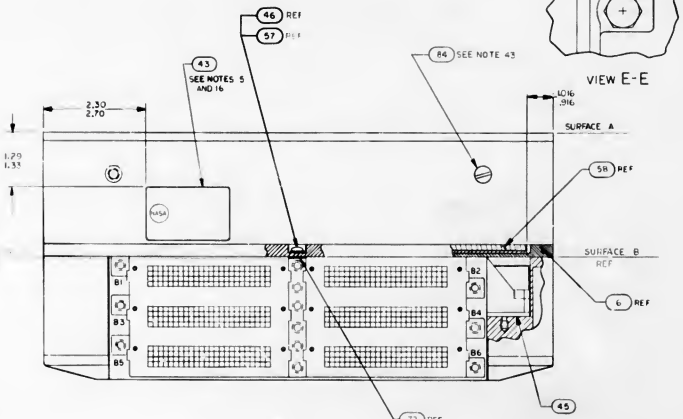

VIEW A-A

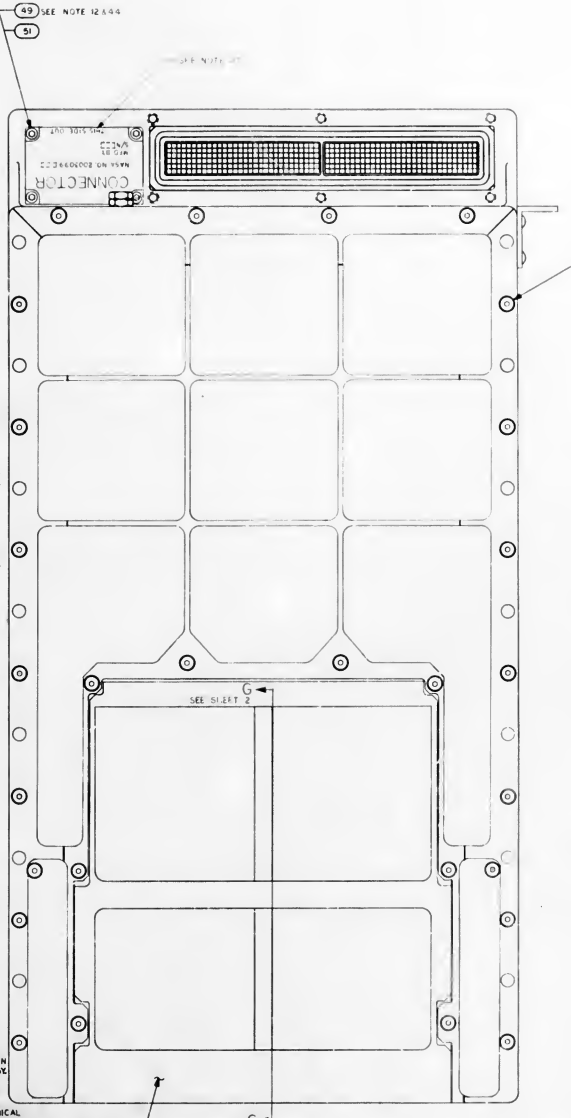

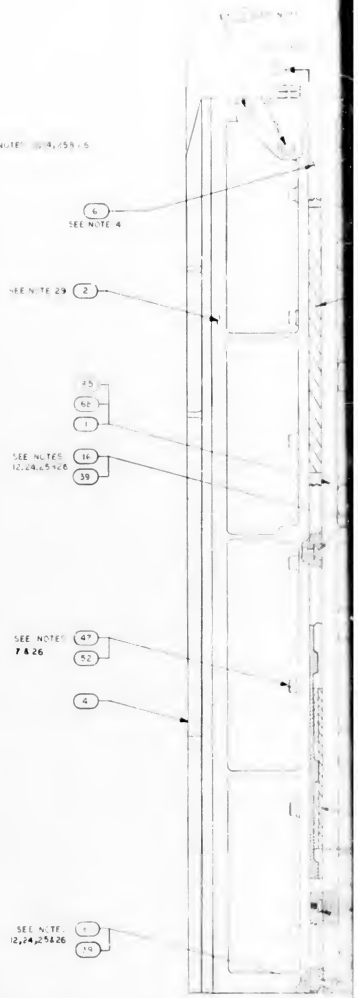

NOTES:

1. INTERPRET DRAWING IN ACCORDANCE WITH STANDARDS PRESCRIBED BY MIL-D-70327
2. PHANTOM LINES DENOTE AGC COLDPLATE AND HANDLING FIXTURE TO BE SUPPLIED BY NORTH AMERICAN AVIATION, INC
3. ADD SILICONE COMPOUND 1006878 TO MODULE MATING METAL SURFACES AND TRAY MATING SURFACES
4. ASSEMBLE FIND NO. 53 AND FIND NO. 63 TO FIND NO. 6 AND FIND NO. 6 TO FIND NO. 2 PRIOR TO ASSEMBLY OF FIND NO. 2 TO FIND NO. 1 OR FIND NO. 68 OR FIND NO. 85
5. BOND FIND NO. 43 TO FIND NO. 1 OR FIND NO. 68 OR FIND NO. 85 PER ND1002219, MIL TMCD II
6. UNLESS OTHERWISE SPECIFIED TORQUE ALL MODULE MOUNTING SCREWS 15/19 INCH POUNDS
7. TORQUE FIND NO. 47 TO 28/32 INCH POUNDS
8. FINISH IS REQUIRED TO SAT15 FF ~~ICD-GAEC-510-10001~~
9. APPLY SEALING COMPOUND MIL-S-22473 GRADE H TO FIND NO. 53, FIND NO. 56 AND FIND NO. 44
10. COMPLETED ASSEMBLY SHALL BE TESTED IN ACCORDANCE WITH AND SHALL MEET ALL THE REQUIREMENTS OF PS2016007
11. TORQUE FIND NO. 36 AND FIND NO. 69 MOUNTING SCREWS TO BE 10/12 INCH POUNDS
12. TORQUE FIND NO. 46, 49, 50 AND 67 TO BE 18/22 INCH POUNDS
13. TORQUE FIND NO. 53 TO BE 4/6 INCH POUNDS
14. TORQUE FIND NO. 44 AND FIND NO. 56 TO BE 137/157 INCH POUNDS
15. FIND NO. 40 SHALL BE SUPPLIED AS PART OF THIS ASSEMBLY
16. MARK COMPUTER ASSEMBLY AND RELATED PART NO., APPLICABLE DASH NO., SERIAL NO. AND CONTRACT NO. PER 1004260 AND SERIALIZE PER ND1002023
17. FINISH SURFACE [A-1] PER ICD NAA WHO1-01302-116 ~~THIS ASSEMBLY MUST BE CAPABLE OF MEETING ELECTRICAL BONDING REQUIREMENTS OF ICD NAA WHO1-01302-116~~
18. BOND FIND NO. 58 TO FIND NO. 6 IN POSITION SHOWN USING 1006338 CURE AT ROOM TEMP 24 HRS PRIOR TO ASSY.
19. REFERENCED MODULES MUST NOT BE REPLACED OR INTERCHANGED WITHOUT REPEATING NOMINAL SELECTION PROCEDURE PER NOTE 10
20. THE VALUE OF C1 TO BE DETERMINED AT ELECTRICAL TEST AND SELECTED FROM APPROPRIATE CHART
21. WHEN THE VALUE OF C1 IS ZERO NO COMPONENT SHALL BE USED
22. ENCAPSULATE AREA SHOWN AFTER SELECTION AND INSTALLATION OF C1 USING ND1002009 METHOD C OR D USING PRIMER PER SCD012513
23. WELD PER ND1002205
24. ASSEMBLE HARDWARE WITH SMOOTH FACE OF FIND NO. 39 IN CONTACT WITH SCREW HEAD
25. FIND NO. 39, 48, 59 & 57 TO BE DISCARDED AND REPLACED WITH NEW PARTS EACH TIME THEY ARE DISASSEMBLED
26. ALL EXPOSED HARDWARE ASSEMBLIES WITH .002 MIN THICK COATING OF FIND NO. 80. OVERALL COMPUTER ASSEMBLY DIMENSIONS SHALL NOT BE EXCEEDED. CURE AT ROOM TEMP 24 HRS
27. STENCILING SHOWN FOR ORIENTATION ONLY
28. KEEP ALL MATING THREADS OF SCREWS, TRAY AND MOD SPACER INSERTS FREE OF SILICONE COMPOUND
29. FILL FEMALE INSULATORS OF B41 AND B42 [illegible] USING FIND NO. 70 PRIOR TO ASSEMBLY OF FIND NO. [illegible]
[illegible] FIND NO. [illegible] USE EITHER [illegible]
31. FIND NO. [illegible] USE EITHER [illegible]
32. [illegible] FIND NO. [illegible]
33. SEE SHEET 2
34. SEE SHEET 2
35. SEE SHEET 2
36. SEE SHEET 2
37. SEE SHEET 2
38. SEE SHEET 2
39. SEE SHEET 2
40. SEE SHEET 2
41. SEE SHEET 2
42. SEE SHEET 2

2003993

2003993 ME1/2 SH1/2

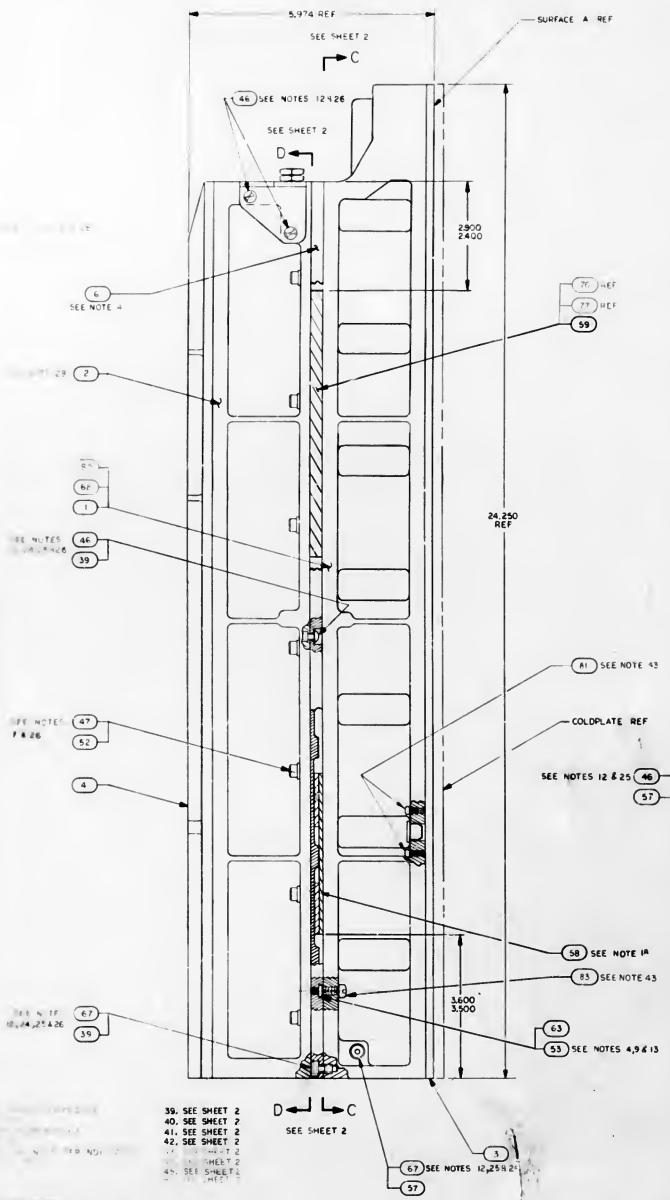

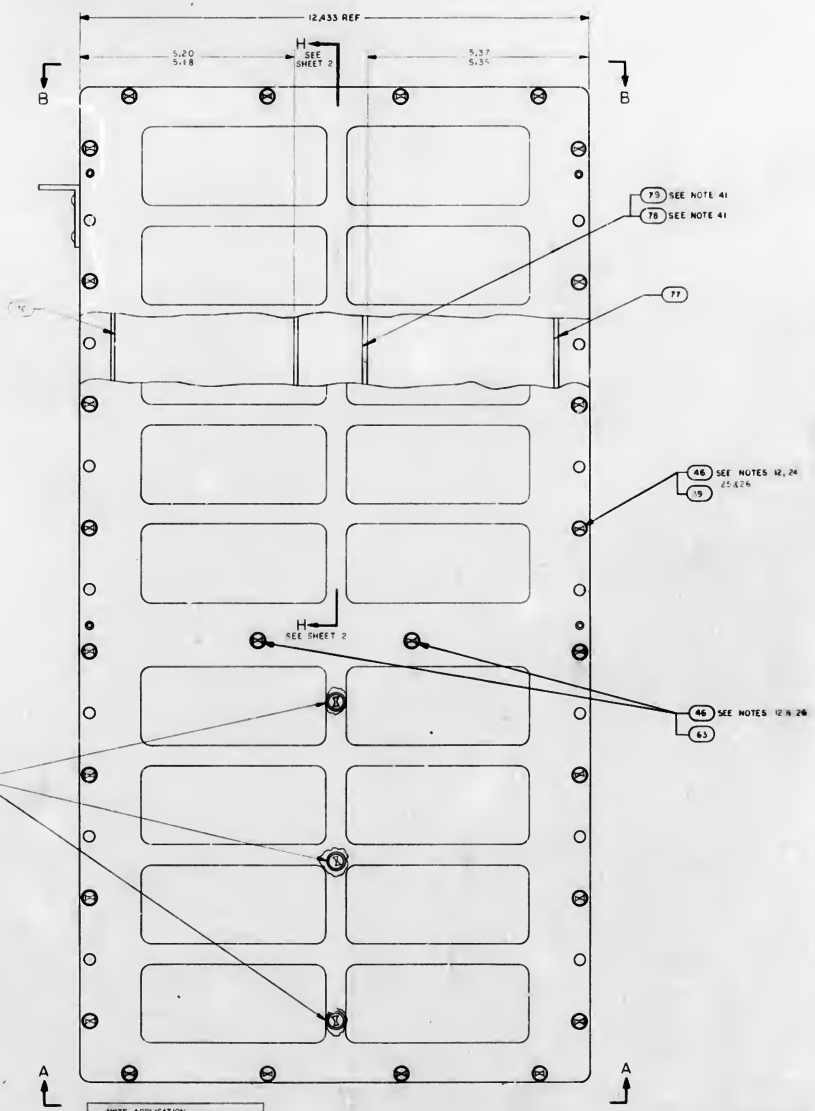

NOTE APPLICATION	
DASH NO.	NOTES APPLICABLE
-011	1 THRU 34, 37, 43, 44, 45, 46
-021	1 THRU 33, 37, 43, 44, 45, 46
-031	1 THRU 34, 36 & 39 THRU 46
-041	1 THRU 34, 37 & 39 THRU 46

1	1	1	1	2003111-031	ERASABLE MEMORY MODULE B12	86
—	1	—	—	2003092-011	TRAY "A" WIRED ASSY	85
4	4	4	4	1010485-432	SCREW, NYLON	84
11	11	11	11	1010485-332	SCREW, NYLON	83
6	6	6	6	1010485-235	SCREW, NYLON	82
28	28	28	28	1010485-100	SCREW, NYLON	81
AR	AR	AR	AR	1006338-003	SEALING COMPOUND, SILICONE RUBBER	80
1	1	—	—	2004811	SHIM VIBRATION DAMPENING	79
	1	—	—	2004810	PAD VIBRATION DAMPENING	78
	1	—	—	2004899-007	PAD VIBRATION	77
	1	—		2004899-006	PAD VIBRATION	76
	AR			2004895-002	SHIM AGC	75
	AR			2004895-001	SHIM AGC	74
—	1	—	—	2003092-041	TRAY "A" WIRED ASSY	73
AR	AR	AR	AR	2010801	SHIM AGC	72
AR	AR	AR	AR	2010800-000	SHIM AGC	71
				2005944	AGC WIRE LIST	REF
AR	AR	AR	AR	MIL-S-8660	SILICONE COMPOUND	70
2	2	2	—	2003092-011	POWER SUPPLY MODULE A30-31	69
1	—	1	—	SEE NOTE 30	TRAY "A" WIRED ASSY	68
33	33	33	33	2004732-002	SCREW, COATED	67
	AR	AR	AR	1006338-002	SEALING COMPOUND, SILICONE RUBBER	66
AR	AR	AR	AR	1006176-22	INSULATION, SLEEVING ELECTRICAL	65
1	1	1	1	SEE NOTE 20	CAPACITOR	64
10	10	10	10	2004148-007	WASHER, FLAT	63
1	1	1	1	SEE NOTE 31	SENSE AMPLIFIER MODULE, FIXED MEMORY B14	62
	—	AR	AR	2004895-002	SHIM AGC	61
	—	AR	AR	2004895-001	SHIM AGC	60
	—	1	1	2004899-001	PAD VIBRATION	59
	1	1	1	2003970	VIBRATION PAD ASSY	58
4	4	4	4	NAS1598-DOUN	WASHER, SEALING	57
	1	1	1	2018773	VALVE, PRESSURE ASSEMBLY	56
	1	1	1	1000159-5	PACKING, PREFORMED "O" RING	55
2	2	2	2	2004984-001	WASHER, FLAT	54
6	6	6	6	2004130	PAD, THREADED	53
18	18	18	18	2004894-014	WASHER, FLAT	52
4	4	4	4	2004894-012	WASHER, FLAT	51
2	2	2	2	1001489-26	SCREW, HEX SOCKET HEAD	50
4	4	4	4	1004722-2	SCREW, CAPTIVE	49
		1	1	1000159-7	PACKING, PREFORMED "O" RING	48
18	18	18	18	2004732-003	SCREW, COATED	47
33	33	33	33	2004732-001	SCREW, COATED	46
2	2	2	2	1006147	GASKET, PLATE	45
		1	1	2004986	PLUG, MACHINE THREAD	44
	1	1	1	1004260-19	NAME PLATE, TYPE I	43
	1	1	1	2004113-001	BRACKET, CABLE	42
	1	1	1	2009099-011	CONNECTOR ASSEMBLY	41
1	1	1	1	1006380	GASKET, RETAINED	40
58	58	58	58	2004977	WASHER, KNURLED	39
3	3	3	3	2003067-041	INTERFACE MODULE A27-29	38
2	2	2	2	2003070-031	INTERFACE MODULE A25-26	37
	—	2	2	2003887-011	POWER SUPPLY MODULE A30-31	36
	1	1	1	SEE NOTES 36 & 37	LOGIC MODULE A24	35
1	1	1	1		LOGIC MODULE A23	34
	1	1	1		LOGIC MODULE A22	33
	1	1	1		LOGIC MODULE A21	32
1	1	1	1		LOGIC MODULE A20	31
	1	1	1		LOGIC MODULE A19	30
	1	1	1		LOGIC MODULE A18	29
	1	1	1		LOGIC MODULE A17	28
	1	1	1		LOGIC MODULE A16	27
1	1	1	1		LOGIC MODULE A15	26
	1	1	1		LOGIC MODULE A14	25
	1	1	1		LOGIC MODULE A13	24
	1	1	1		LOGIC MODULE A12	23
4	4	4	4		LOGIC MODULE A8-11	22
	1	1	1		LOGIC MODULE A7	21
	1	1	1		LOGIC MODULE A6	20
	1	1	1		LOGIC MODULE A5	19
	1	1	1		LOGIC MODULE A4	18
	1	1	1		LOGIC MODULE A3	17
	1	1	1		LOGIC MODULE A2	16
	1	1	1	SEE NOTES 36 & 37	LOGIC MODULE A1	15
2	2	2	2	2003140-031	ROPE DRIVER MODULE B16-17	14
1	1	1	1	2003027-031	STRAND SELECT MODULE B15	13
	1	1	1	SEE NOTE 30	SENSE AMPLIFIER MOD, ERASABLE MEMORY B13	12
—	1	1	1	2003112-031	ERASABLE MEMORY MODULE B12	11
	1	1	1	2003226-031	CURRENT SWITCH MODULE B11	10
2	2	2	2	2003114-021	ERASABLE DRIVER MODULE B9-10	9
	1	1	1	2003083-021	ALARM MODULE B8	8
	1	1	1	2003036-031	OSCILLATOR MODULE B7	7
	1	1	1	2003978-011	MID SPACER	6
	1	1	1	2003059-021	INTERCONNECTION HEADER ASSEMBLY	5
	1	1	1	2003976-011	TRAY B COVER	4
	1	1	1	2003977-011	TRAY A COVER	3
	1	1	1	2003093-021	TRAY B WIRED ASSEMBLY	2
	—	1	1	2003092-031	TRAY A WIRED ASSEMBLY	1
-041	-031	-021	-011	PART OR IDENTIFYING NO	NOMENCLATURE OR DESCRIPTION	ITEM NO

LIST OF MATERIALS

REVISIONS				
SYM	ZONE	DESCRIPTION	DR	CHK	DATE	APPROV'D BY
G		REVISED PER TDRR 34265				

UNLESS OTHERWISE SPECIFIED DIMENSIONS ARE IN INCHES CAPACITOR VALUES ARE IN μf RESISTOR VALUES ARE IN OHMS TOLERANCES ON FRACTIONS DECIMALS ANGLES ± ± ± DO NOT SCALE THIS DRAWING

MATERIAL —

2003993 NEXT ASSY USED ON APPLICATION

MIT INSTRUMENTATION LAB CAMBRIDGE MASS

MANNED SPACECRAFT CENTER HOUSTON TEXAS

DRAWN CHECKED APPROVED APPROVED

COMPUTER ASSEMBLY

APPROVED QUALITY APPROVED MFG

CODE IDENT NO 80230 SIZE J DRAWING NO 2003993

DATE SCALE 1/1 SHEET 1 OF 2

2003993

C1	
PART NO.	VALUE UUF
1006777-1	10
-15	150
-18	330
-20	470
-22	680
1006777-23	820
SEE NOTE 21	0
1006777-6	220
1006777-17	270

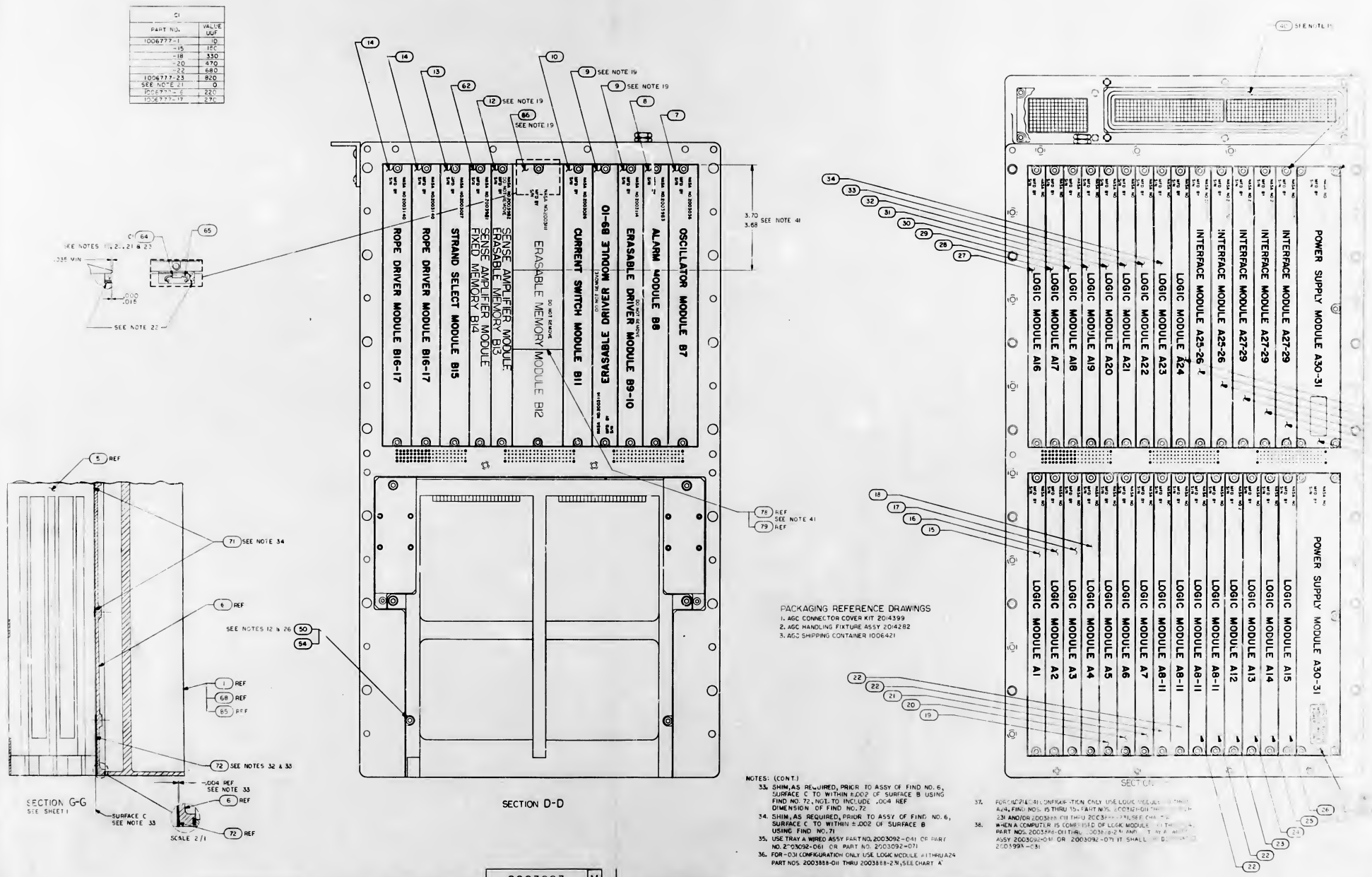

PACKAGING REFERENCE DRAWINGS
1. AGC CONNECTOR COVER KIT 2014399
2. AGC HANDLING FIXTURE ASSY 2014282
3. AGC SHIPPING CONTAINER 1006421

NOTES: (CONT.)

33. SHIM, AS REQUIRED, PRIOR TO ASSY OF FIND NO. 6, SURFACE C TO WITHIN ±.002 OF SURFACE B USING FIND NO. 72, NOT TO INCLUDE .004 REF DIMENSION OF FIND NO. 72
34. SHIM, AS REQUIRED, PRIOR TO ASSY OF FIND NO. 6, SURFACE C TO WITHIN ±.002 OF SURFACE B USING FIND NO. 71
35. USE TRAY A WIRED ASSY PART NO. 2003092-041 OR PART NO. 2003092-061 OR PART NO. 2003092-071
36. FOR -031 CONFIGURATION ONLY USE LOGIC MODULE A11 THRU A24 PART NOS. 2003888-011 THRU 2003888-234, SEE CHART A
37. FOR 2003888-011 CONFIGURATION ONLY USE LOGIC MODULE A11 THRU A24, FIND NOS. 15 THRU 15, PART NOS. 2003888-011 THRU 2003888-234 AND/OR 2003888-011 THRU 2003888-234, SEE CHART A
38. WHEN A COMPUTER IS COMPRISED OF LOGIC MODULE A11 THRU A24 PART NOS. 2003888-011 THRU 2003888-234 AND ASSY 2003092-041 OR 2003092-071 IT SHALL BE DESIGNATED 2003993-031

2003993 M

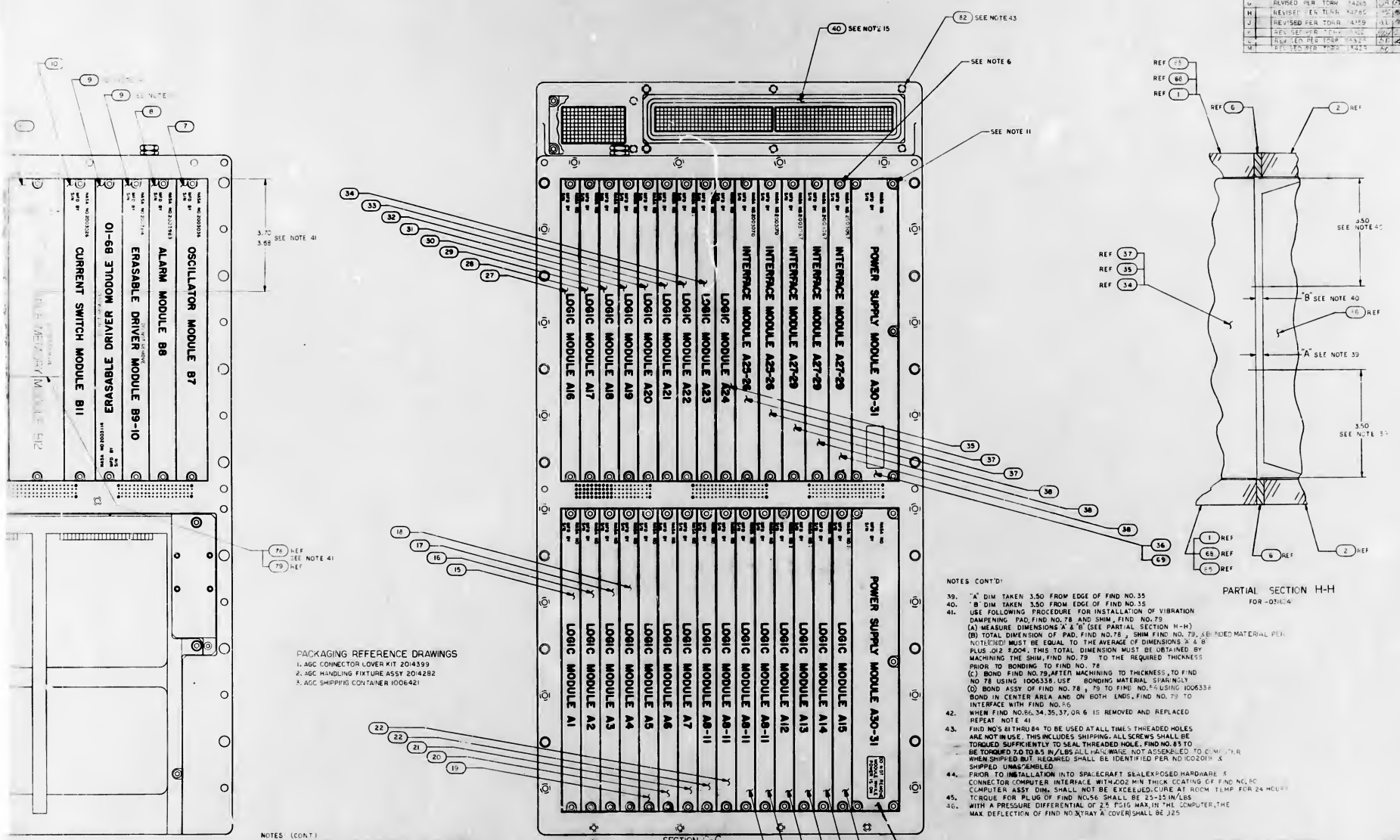

PACKAGING REFERENCE DRAWINGS

1. AGC CONNECTOR COVER KIT 2014399
2. AGC HANDLING FIXTURE ASSY 2014282
3. AGC SHIPPING CONTAINER 1006421

NOTES (CONT.)

33. SHIM, AS REQUIRED, PRIOR TO ASSY OF FIND NO. 6, SURFACE C TO WITHIN ±.002 OF SURFACE B USING FIND NO. 72, NOT TO INCLUDE .004 REF DIMENSION OF FIND NO. 72
34. SHIM, AS REQUIRED, PRIOR TO ASSY OF FIND NO. 6, SURFACE C TO WITHIN ±.002 OF SURFACE B USING FIND NO. 71
35. USE TRAY A WIRED ASSY PART NO. 2003092-041 OR PART NO. 2003092-061 OR PART NO. 2003092-071
36. FOR -031 CONFIGURATION ONLY USE LOGIC MODULE A1 THRU A24 PART NOS 2003888-011 THRU 2003888-231, SEE CHART 'A'
37. FOR -041 & -041 CONFIGURATION ONLY USE LOGIC MODULE A1 THRU A24, FIND NOS. 15 THRU 35, PART NOS. 2003121-011 THRU 2003121-231 AND/OR 2003888-011 THRU 2003888-231, SEE CHART 'A'
38. WHEN A COMPUTER IS COMPRISED OF LOGIC MODULES A1 THRU A24, PART NOS. 2003888-011 THRU 2003888-231 AND A TRAY 'A' WIRED ASSY 2003092-041 OR 2003092-071 IT SHALL BE DESIGNATED 2003993-031

NOTES CONT'D:

39. "A" DIM TAKEN 3.50 FROM EDGE OF FIND NO. 35
40. "B" DIM TAKEN 3.50 FROM EDGE OF FIND NO. 35
41. USE FOLLOWING PROCEDURE FOR INSTALLATION OF VIBRATION DAMPENING PAD, FIND NO. 78 AND SHIM, FIND NO. 79
    (A) MEASURE DIMENSIONS 'A' & 'B' (SEE PARTIAL SECTION H-H)
    (B) TOTAL DIMENSION OF PAD, FIND NO. 78, SHIM FIND NO. 79, ABSORBED MATERIAL PER NOTE (40) MUST BE EQUAL TO THE AVERAGE OF DIMENSIONS 'A' & 'B' PLUS .012 ±.004. THIS TOTAL DIMENSION MUST BE OBTAINED BY MACHINING THE SHIM, FIND NO. 79 TO THE REQUIRED THICKNESS PRIOR TO BONDING TO FIND NO. 78
    (C) BOND FIND NO. 79, AFTER MACHINING TO THICKNESS, TO FIND NO 78 USING 1006338. USE BONDING MATERIAL SPARINGLY
    (D) BOND ASSY OF FIND NO. 78, 79 TO FIND NO. 56 USING 1006338 BOND IN CENTER AREA AND ON BOTH ENDS, FIND NO. 79 TO INTERFACE WITH FIND NO. 86
42. WHEN FIND NO. 86, 34, 35, 37, OR 6 IS REMOVED AND REPLACED REPEAT NOTE 41
43. FIND NO'S 81 THRU 84 TO BE USED AT ALL TIMES THREADED HOLES ARE NOT IN USE. THIS INCLUDES SHIPPING. ALL SCREWS SHALL BE TORQUED SUFFICIENTLY TO SEAL THREADED HOLE. FIND NO. 83 TO BE TORQUED 7.0 TO 8.5 IN/LBS ALL HARDWARE, NOT ASSEMBLED TO COMPUTER WHEN SHIPPED BUT REQUIRED SHALL BE IDENTIFIED PER NO. 1002019 & SHIPPED UNASSEMBLED
44. PRIOR TO INSTALLATION INTO SPACECRAFT SEAL EXPOSED HARDWARE & CONNECTOR COMPUTER INTERFACE WITH .002 MIN THICK COATING OF FIND NO. 80 COMPUTER ASSY DIM. SHALL NOT BE EXCEEDED CURE AT ROOM TEMP FOR 24 HOURS
45. TORQUE FOR PLUG OF FIND NO. 56 SHALL BE 25-35 IN/LBS
46. WITH A PRESSURE DIFFERENTIAL OF 2.5 PSIG MAX. IN THE COMPUTER, THE MAX DEFLECTION OF FIND NO. 3 (TRAY A COVER) SHALL BE .125

REVISIONS					
SYM	ZONE	DESCRIPTION	BY	CHK	DATE	APPROVED
A		NOT RELEASED				
B		RELEASED PER TDRR 32965				
		REVISED PER TDRR 33106				
F		REVISED PER TDRR 33631				
G		REVISED PER TDRR 34265				
H		REVISED PER TDRR 34285				
J		REVISED PER TDRR 34459				
K		REVISED PER TDRR [illegible]				
L		REVISED PER TDRR 34525				
M		REVISED PER TDRR 34529				

QTY REQD	PART OR IDENTIFYING NO	NOMENCLATURE OR DESCRIPTION

LIST OF MATERIALS

MIT INSTRUMENTATION LAB CAMBRIDGE MASS

MANNED SPACECRAFT CENTER HOUSTON TEXAS

COMPUTER ASSEMBLY

CODE IDENT NO	SIZE	DRAWING NO
80230	J	2003993

SCALE 1/1 — SHEET 2 OF 2

UNLESS OTHERWISE SPECIFIED DIMENSIONS ARE IN INCHES CAPACITOR VALUES ARE IN μf RESISTOR VALUES ARE IN OHMS TOLERANCES ON FRACTIONS ±, DECIMALS ±, ANGLES ±. DO NOT SCALE THIS DRAWING

MATERIAL

NEXT ASSY — USED ON — APPLICATION

DRAWN — CHECKED — APPROVED — APPROVED — APPROVED — APPROVED

2003993

CHART A SEE NOTES 36 & 37				
PART NO. FOR DASH NO.		PART NO. FOR-001A -031 NOTE		MODULES
2003121	-011	2003888	-011	LOGIC MODULE A1
	-021		-021	A2
	-031		-031	A3
	-041		-041	A4
	-051		-051	A5
	-061		-061	A6
	-071		-071	A7
	-081		-081	A8-A11
	-091		-091	A12
	-111		-111	A13
	-121		-121	A14
	-131		-131	A15
	-141		-141	A16
	-151		-151	A17
	-161		-161	A18
	-171		-171	A19
	-181		-181	A20
	-191		-191	A21
	-211		-211	A22
	-221		-221	A23
	-231		-231	LOGIC MODULE A24

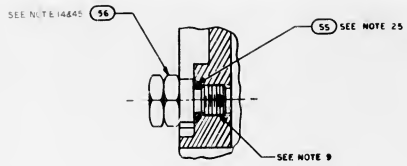

PARTIAL SECTION F F
SCALE: 2/1

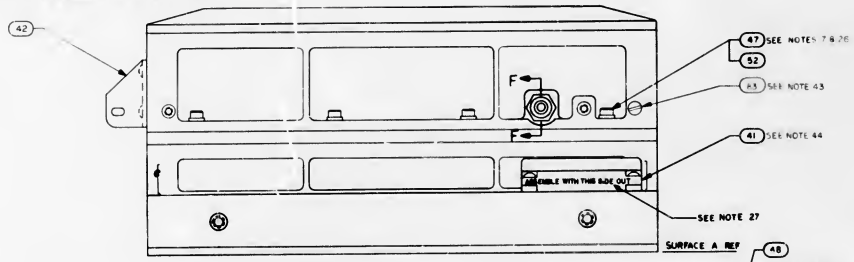

VIEW B-B

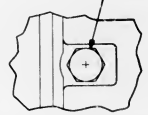

VIEW E-E

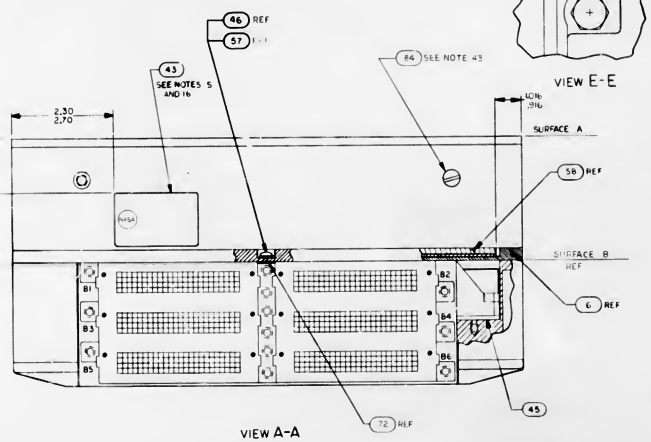

VIEW A-A

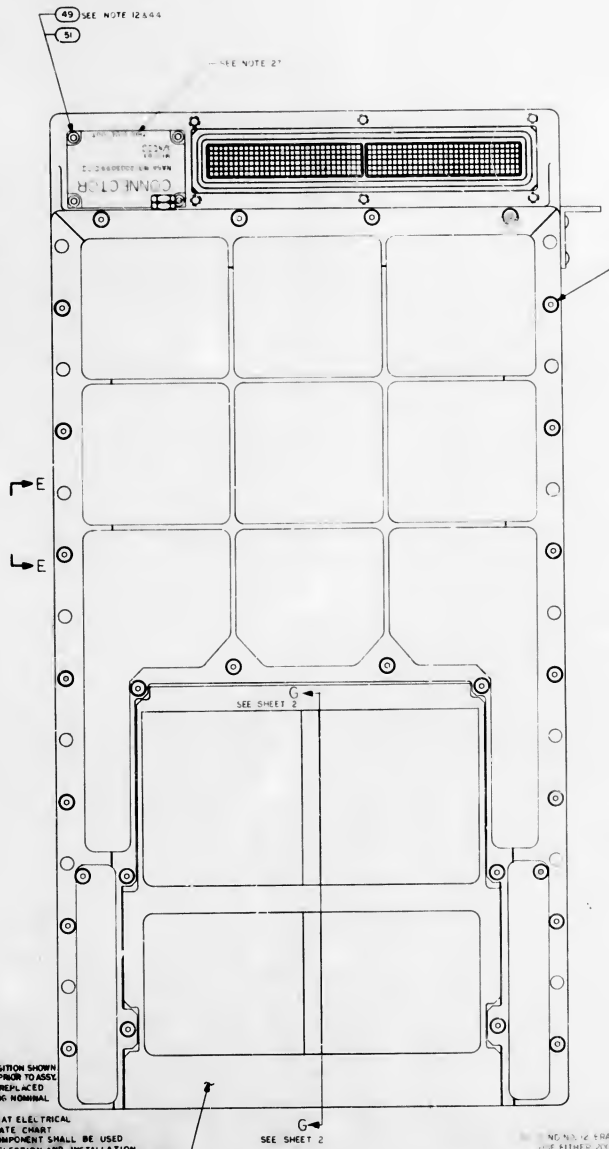

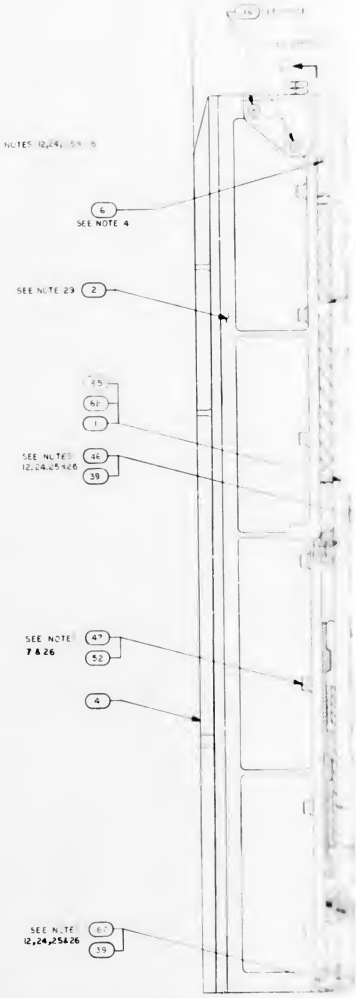

NOTES:

1. INTERPRET DRAWING IN ACCORDANCE WITH STANDARDS PRESCRIBED BY MIL-D-70327
2. PHANTOM LINES DENOTE AGC COLDPLATE AND HANDLING FIXTURE TO BE SUPPLIED BY NORTH AMERICAN AVIATION, INC
3. ADD SILICONE COMPOUND 1006879 TO MODULE MATING METAL SURFACES AND TRAY MATING SURFACES
4. ASSEMBLE FIND NO. 53 AND FIND NO. 63 TO FIND NO. 6 AND FIND NO. 6 TO FIND NO. 2 PRIOR TO ASSEMBLY OF FIND NO. 2 TO FIND NO. 1 OR FIND NO. 68 OR FIND NO. 85
5. BOND FIND NO. 43 TO FIND NO. 1 OR FIND NO. 68 OR FIND NO. 85 PER ND1002219, MIL THICK II
6. UNLESS OTHERWISE SPECIFIED TORQUE ALL MODULE MOUNTING SCREWS 15/19 INCH POUNDS
7. TORQUE FIND NO. 47 TO 28/32 INCH POUNDS
8. ~~FINISH IS REQUIRED TO SATISFY ICD GAEC-510-1000~~
9. APPLY SEALING COMPOUND MIL-S-22473 GRADE H TO FIND NO. 53, FIND NO. 56 AND FIND NO. 44
10. COMPLETED ASSEMBLY SHALL BE TESTED IN ACCORDANCE WITH AND SHALL MEET ALL REQUIREMENTS OF PS2060007 FOR-001 & PS2060080 FOR-003 & SUBSEQUENT
11. TORQUE FOR FIND NO. 56 AND FIND NO. 68 MOUNTING SCREWS TO BE 10/12 INCH POUNDS
12. TORQUE FOR FIND NO. 46, 49, 50 AND 67 TO BE 18/22 INCH POUNDS
13. TORQUE FOR FIND NO. 53 TO BE 4/6 INCH POUNDS
14. TORQUE FOR FIND NO. 44 AND FIND NO. 56 TO BE 137/157 INCH POUNDS
15. FIND NO. 43 SHALL BE SUPPLIED AS PART OF THIS ASSEMBLY
16. MARK COMPUTER ASSEMBLY AND RELATED PART NO., APPLICABLE DASH NO., SERIAL NO. AND CONTRACT NO. PER ND1004260 AND SERIALIZE PER ND1002023
17. FINISH SURFACE A-A PER ICD NAA WHOI-01302-116 THIS ASSEMBLY MUST BE CAPABLE OF MEETING ELECTRICAL BONDING REQUIREMENTS OF ICD NAA WHOI-01302-116
18. BOND FIND NO. 58 TO FIND NO. 6 IN POSITION SHOWN USING 1006338 CURE AT ROOM TEMP 24 HRS PRIOR TO ASSY.
19. REFERENCED MODULES MUST NOT BE REPLACED OR INTERCHANGED WITHOUT REPEATING NOMINAL SELECTION PROCEDURE PER NOTE 10
20. THE VALUE OF C1 TO BE DETERMINED AT ELECTRICAL TEST AND SELECTED FROM APPROPRIATE CHART
21. WHEN THE VALUE OF C1 IS ZERO NO COMPONENT SHALL BE USED
22. ENCAPSULATE AREA SHOWN AFTER SELECTION AND INSTALLATION OF C1 USING ND1002009 METHOD C OR D USING PRIMER PER SCD012543
23. WELD PER ND1002005
24. ASSEMBLE HARDWARE WITH SMOOTH FACE OF FIND NO. 39 IN CONTACT WITH SCREW HEAD
25. FIND NO. 50, 49, 56 & 57 TO BE DISCARDED AND REPLACED WITH NEW PARTS EACH TIME THEY ARE DISASSEMBLED
26. ALL EXPOSED HARDWARE ASSEMBLIES WITH .002 MIN THICK COATING OF FIND NO. 70 OVERALL COMPUTER ASSEMBLY DIMENSIONS SHALL NOT BE EXCEEDED. CURE AT ROOM TEMP 24 HRS
27. STENCILING SHOWN FOR ORIENTATION ONLY
28. KEEP ALL MATING THREADS OF SCREWS, TRAY AND MID SPACER INSERTS FREE OF SILICONE COMPOUND
29. FILL FEMALE INSULATORS OF B41 AND B42 CONNECTORS USING FIND NO. 70 PRIOR TO ASSEMBLY OF FIND NO. 5 TO FIND NO. 2
31. FIND NO. 12 FRAYABLE MEMBRY, SEPARATE COMPONENTS USE EITHER [illegible] AMPLIFIER MODULE
32. B[illegible] FIND NO. 5 PER ND[illegible]
33. SEE SHEET 2
34. SEE SHEET 2
35. SEE SHEET 2
36. SEE SHEET 2
37. SEE SHEET 2
38. SEE SHEET 2
39. SEE SHEET 2
40. SEE SHEET 2
41. SEE SHEET 2
42. SEE SHEET 2
47. SEE SHEET 2

2003993 N

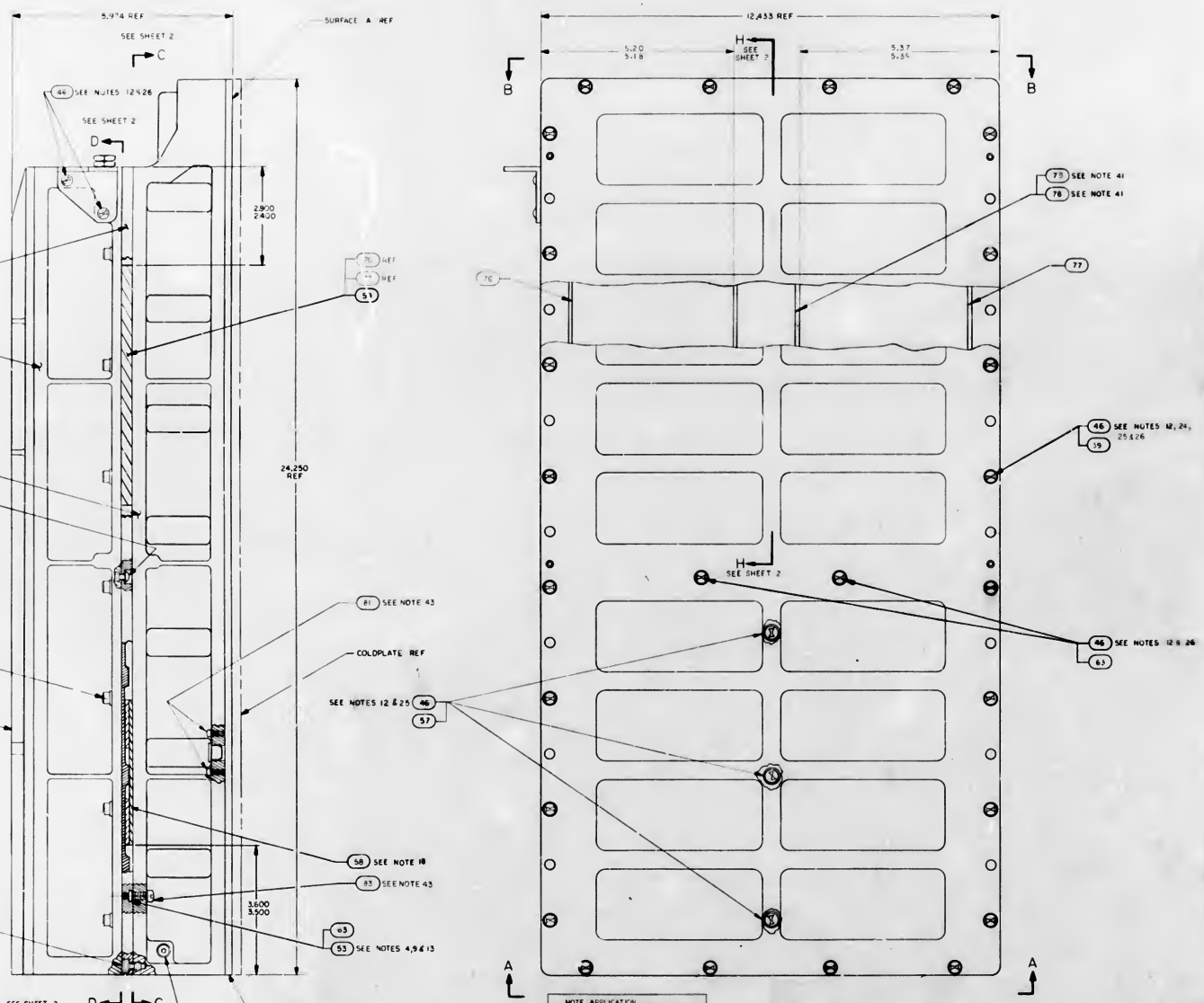

39. SEE SHEET 2
40. SEE SHEET 2
41. SEE SHEET 2
42. SEE SHEET 2
47 SEE SHEET 2

NOTE APPLICATION	
DASH NO.	NOTES APPLICABLE
-001	1 THRU 34, 37, 43 & 44, 45 & 46
-021	1 THRU 37, 43, 44 & 45 & 46
-031	1 THRU 34, 36 & 38 THRU 46
-041	1 THRU 37 & 39 THRU 46

QTY REQ'D				PART OR IDENTIFYING NO.	NOMENCLATURE OR DESCRIPTION	FIND NO.
1	1	1	1	2003191-001	ERASABLE MEMORY MODULE B12	86
—	1	—	—	2008082-011	TRAY 'A' WIRED ASSY	85
4	4	4	4	1010485-432	SCREW, NYLON	84
11	11	11	11	1010485-332	SCREW, NYLON	83
6	6	6	6	1010485-236	SCREW, NYLON	82
28	28	28	28	1010485-100	SCREW, NYLON	81
AR	AR	AR	AR	1006338-003	SEALING COMPOUND, SILICONE RUBBER	80
—	1	—	—	2004690	SHIM VIBRATION DAMPENING	79
—	1	—	—	2004690	PAD VIBRATION DAMPENING	78
—	1	—	—	2004699-007	PAD VIBRATION	77
—	1	—	—	2004699-006	PAD VIBRATION	76
—	AR	—	—	2004800-002	SHIM AGC	75
—	AR	—	—	2004800-001	SHIM AGC	74
—	1	—	—	2008082-011	TRAY 'A' WIRED ASSY	73
AR	AR	AR	AR	2010801	SHIM AGC	72
AR	AR	AR	AR	2010800-000	SHIM	71
				SEE NOTE 47	AGC WIRE LIST	REF
AR	AR	AR	AR	1006954	SILICONE COMPOUND	70
2	2	2	—	2008086-011	POWER SUPPLY MODULE A30-31	69
—	—	—	—	[illegible]	TRAY 'A' WIRED ASSY	68
33	33	33	33	[illegible]	SCREW, COATED	67
AR	AR	AR	AR	[illegible]	[illegible] COMPOUND, SILICONE RUBBER	66
AR	AR	AR	AR	[illegible]	INSULATION, SLEEVING ELECTRICAL	65
1	1	1	1	SEE NOTE 29	CAPACITOR	64
10	10	10	10	2004148-007	WASHER, FLAT	63
1	1	—	1	SEE NOTE 31	SENSE AMPLIFIER MODULE, FIXED MEMORY B14	62
—	—	AR	—	[illegible]	SHIM AGC	61
—	—	AR	—	[illegible]	SHIM AGC	60
—	—	1	1	2004699-001	PAD VIBRATION	59
—	1	1	1	2005397D	VIBRATION PAD ASSY	58
4	4	4	4	NAS1598-D08N	WASHER, SEALING	57
—	1	1	1	2018773	VALVE PRESSURE ASSEMBLY	56
—	1	1	1	1000159-3	PACKING, PREFORMED "O" RING	55
2	—	2	2	2004964-001	WASHER, FLAT	54
8	—	8	8	2004132	PAD, THREADED	53
18	18	18	18	2004894-014	WASHER, FLAT	52
4	4	4	4	2004894-012	WASHER, FLAT	51
2	2	2	2	1001469-36	SCREW, HEX SOCKET HEAD	50
4	4	4	4	1004722-2	SCREW, CAPTIVE	49
1	1	1	1	1000159-7	PACKING, PREFORMED "O" RING	48
18	18	18	18	2004732-003	SCREW, COATED	47
33	33	33	33	2004732-001	SCREW, COATED	46
2	2	2	2	1006347	GASKET, PLATE	45
1	1	1	1	2004986	PLUG, MACHINE THREAD	44
1	1	1	1	1004260-19	NAME PLATE, TYPE I	43
1	1	1	1	2004113-001	BRACKET, CABLE	42
1	1	1	1	2005099-011	CONNECTOR ASSEMBLY	41
1	1	1	1	1006380	GASKET, RETAINED	40
58	58	58	58	2004470	WASHER, KNURLED	39
3	3	3	3	2003067-041	INTERFACE MODULE A27-29	38
2	2	2	2	2003070-031	INTERFACE MODULE A25-26	37
—	—	—	2	2003867-011	POWER SUPPLY MODULE A30-31	36
1	1	1	1	SEE NOTES 34 & 37	LOGIC MODULE A24	35
1	1	1	1	—	LOGIC MODULE A23	34
1	1	1	1	—	LOGIC MODULE A22	33
1	1	1	1	—	LOGIC MODULE A21	32
1	1	1	1	—	LOGIC MODULE A20	31
1	1	1	1	—	LOGIC MODULE A19	30
1	1	1	1	—	LOGIC MODULE A18	29
1	1	1	1	—	LOGIC MODULE A17	28
1	1	1	1	—	LOGIC MODULE A16	27
1	1	1	1	—	LOGIC MODULE A15	26
1	1	1	1	—	LOGIC MODULE A14	25
1	1	1	1	—	LOGIC MODULE A13	24
1	1	1	1	—	LOGIC MODULE A12	23
4	4	4	4	—	LOGIC MODULE A8-11	22
1	1	1	1	—	LOGIC MODULE A7	21
1	1	1	1	—	LOGIC MODULE A6	20
1	1	1	1	—	LOGIC MODULE A5	19
1	1	1	1	—	LOGIC MODULE A4	18
1	1	1	1	—	LOGIC MODULE A3	17
1	1	1	1	—	LOGIC MODULE A2	16
1	1	1	1	SEE NOTES 34 & 37	LOGIC MODULE A1	15
2	2	2	2	2003140-031	ROPE DRIVER MODULE B6-17	14
—	1	—	1	2003027-001	STRAND SELECT MODULE B15	13
—	1	—	—	SEE NOTE 30	SENSE AMP. MOD, ERASABLE MEMORY B13	12
—	1	—	—	2003192-[illegible]	ERASABLE MEMORY MODULE B12	11
1	1	1	1	2003326-031	CURRENT SWITCH MODULE B11	10
2	2	2	2	2003114-021	ERASABLE DRIVER MODULE B9 10	9
1	1	1	1	2003083-021	ALARM MODULE B8	8
1	1	1	1	2003036-001	OSCILLATOR MODULE B7	7
1	1	1	1	2003978-001	MID SPACER	6
1	1	1	1	2003059-021	INTERCONNECTION HEADER ASSEMBLY	5
1	1	1	1	2003976-011	TRAY B COVER	4
1	1	1	1	2003977-011	TRAY A COVER	3
1	—	—	1	2003093-021	TRAY B WIRED ASSEMBLY	2
1	—	—	1	2003092-031	TRAY A WIRED ASSEMBLY	1
QTY REQ'D B-52	QTY REQ'D B-53	QTY REQ'D B-54	QTY REQ'D B-55	PART OR IDENTIFYING NO.	NOMENCLATURE OR DESCRIPTION	FIND NO.

-001 -011 LIST OF MATERIALS

UNLESS OTHERWISE SPECIFIED DIMENSIONS ARE IN INCHES CAPACITOR VALUES ARE IN µf RESISTOR VALUES ARE IN OHMS TOLERANCES ON FRACTIONS ± DECIMALS ± ANGLES ± DO NOT SCALE THIS DRAWING

MATERIAL —

2003191 NEXT ASSY USED ON APPLICATION

MIT INSTRUMENTATION LAB CAMBRIDGE MASS

DRAWN CHECKED APPROVED

MANNED SPACECRAFT CENTER HOUSTON TEXAS

COMPUTER ASSEMBLY

CODE IDENT NO. 80230 SIZE J DRAWING NO. 2003993

SCALE NONE SHEET 1 OF 2

REVISIONS

REVISED PER TDRR 34265

REVISED PER TDRR 36086

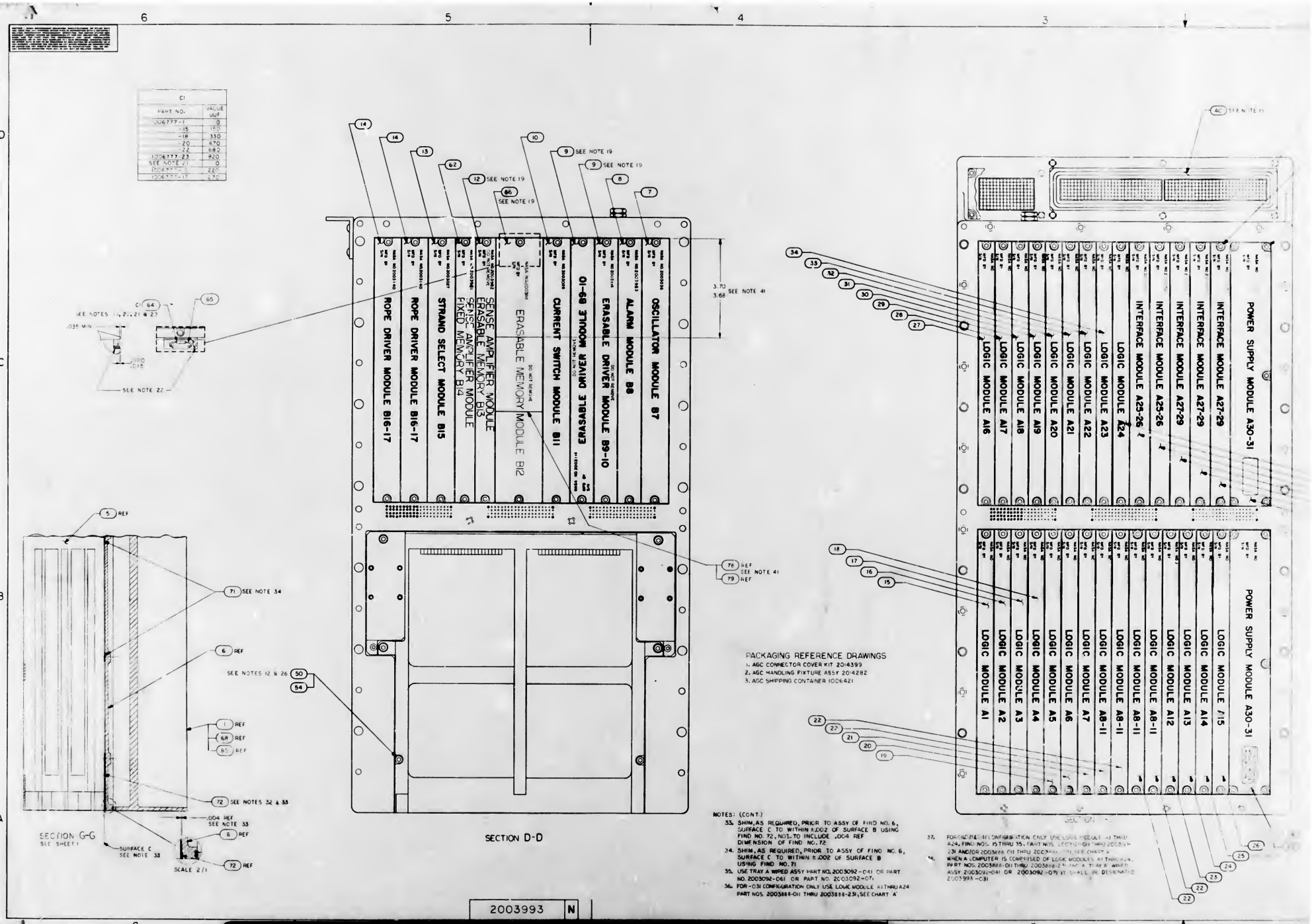
C1
PART NO. | VALUE UUF
1006777-1 | 0
-15 | 180
-18 | 330
-20 | 470
-22 | 680
1006777-23 | 820
SEE NOTE 21 | 0
1006777-16 | 220
1006777-17 | 270
SEE NOTES 14, 21, 21 & 23
.035 MIN
.100 ±.010
SEE NOTE 22
SEE NOTE 19
SEE NOTE 41
ROPE DRIVER MODULE B16-17
ROPE DRIVER MODULE B16-17
STRAND SELECT MODULE B15
SENSE AMPLIFIER MODULE
ERASABLE MEMORY B13
SENSE AMPLIFIER MODULE
FIXED MEMORY B14
ERASABLE MEMORY MODULE B12
CURRENT SWITCH MODULE B11
ERASABLE DRIVER MODULE B9-10
ERASABLE DRIVER MODULE B9-10
ALARM MODULE B8
OSCILLATOR MODULE B7
SEE NOTES 32 & 33
SEE NOTE 34
SECTION G-G
SEE SHEET 1
SURFACE C
SEE NOTE 33
SCALE 2/1
SECTION D-D
POWER SUPPLY MODULE A30-31
INTERFACE MODULE A27-29
INTERFACE MODULE A27-29
INTERFACE MODULE A25-26
INTERFACE MODULE A25-26
LOGIC MODULE A24
LOGIC MODULE A23
LOGIC MODULE A22
LOGIC MODULE A21
LOGIC MODULE A20
LOGIC MODULE A19
LOGIC MODULE A18
LOGIC MODULE A17
LOGIC MODULE A16
POWER SUPPLY MODULE A30-31
LOGIC MODULE A15
LOGIC MODULE A14
LOGIC MODULE A13
LOGIC MODULE A12
LOGIC MODULE A8-11
LOGIC MODULE A8-11
LOGIC MODULE A8-11
LOGIC MODULE A7
LOGIC MODULE A6
LOGIC MODULE A5
LOGIC MODULE A4
LOGIC MODULE A3
LOGIC MODULE A2
LOGIC MODULE A1
SECTION E-E
PACKAGING REFERENCE DRAWINGS
1. AGC CONNECTOR COVER KIT 2014399
2. AGC HANDLING FIXTURE ASSY 2014282
3. AGC SHIPPING CONTAINER 1006421
NOTES: (CONT.)
33. SHIM, AS REQUIRED, PRIOR TO ASSY OF FIND NO. 6, SURFACE C TO WITHIN ±.002 OF SURFACE B USING FIND NO. 72, NOT TO INCLUDE .004 REF DIMENSION OF FIND NO. 72
34. SHIM, AS REQUIRED, PRIOR TO ASSY OF FIND NO. 6, SURFACE C TO WITHIN ±.002 OF SURFACE B USING FIND NO. 71
35. USE TRAY A WIRED ASSY PART NO. 2003092-041 OR PART NO. 2003092-061 OR PART NO. 2003092-071
36. FOR -031 CONFIGURATION ONLY USE LOGIC MODULE A1 THRU A24 PART NOS. 2003888-011 THRU 2003888-231, SEE CHART 'A'
37. FOR 0216-41 CONFIGURATION ONLY USE LOGIC MODULE A1 THRU A24, FIND NOS. 15 THRU 35, PART NOS. 2003888-011 THRU 2003888-231 AND/OR 2003888-011 THRU 2003888-231, SEE CHART 'A'
38. WHEN A COMPUTER IS COMPRISED OF LOGIC MODULES A1 THRU A24, PART NO. 2003888-011 THRU 2003888-231 AND A TRAY B WIRED ASSY 2003092-041 OR 2003092-071 IT SHALL BE DESIGNATED 2003993-031
2003993
N

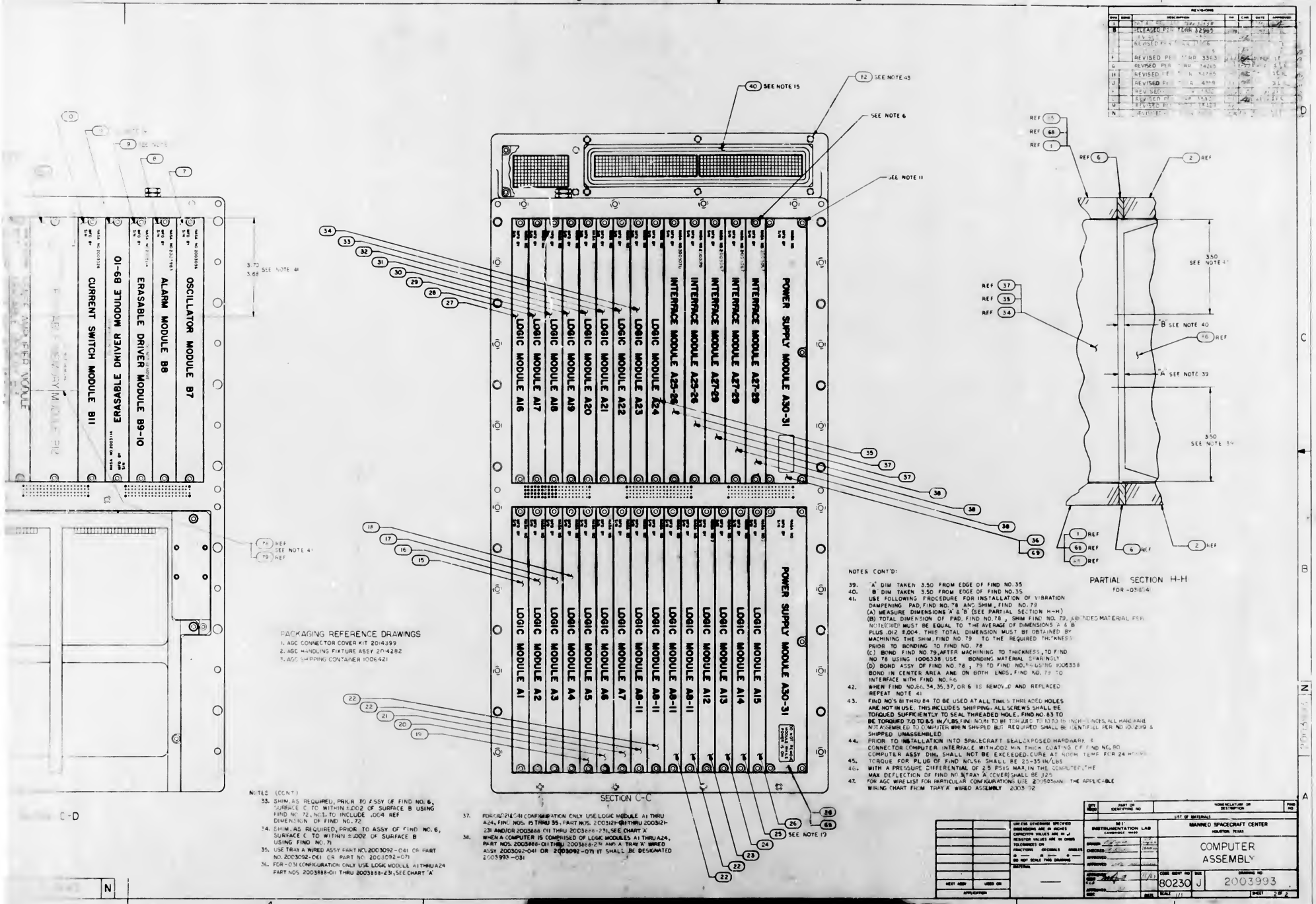
SEE NOTE 15
SEE NOTE 43
SEE NOTE 6
SEE NOTE 11
SEE NOTE 19
SEE NOTE 41
SEE NOTE 40
SEE NOTE 39
SEE NOTE 41
REF
CURRENT SWITCH MODULE B11
ERASABLE DRIVER MODULE B9-10
ERASABLE DRIVER MODULE B8
ALARM MODULE B8
OSCILLATOR MODULE B7
LOGIC MODULE A16
LOGIC MODULE A17
LOGIC MODULE A18
LOGIC MODULE A19
LOGIC MODULE A20
LOGIC MODULE A21
LOGIC MODULE A22
LOGIC MODULE A23
LOGIC MODULE A24
INTERFACE MODULE A25-26
INTERFACE MODULE A25-26
INTERFACE MODULE A27-29
INTERFACE MODULE A27-29
INTERFACE MODULE A27-29
POWER SUPPLY MODULE A30-31
LOGIC MODULE A1
LOGIC MODULE A2
LOGIC MODULE A3
LOGIC MODULE A4
LOGIC MODULE A5
LOGIC MODULE A6
LOGIC MODULE A7
LOGIC MODULE A8
LOGIC MODULE A9-11
LOGIC MODULE A9-11
LOGIC MODULE A9-11
LOGIC MODULE A12
LOGIC MODULE A13
LOGIC MODULE A14
LOGIC MODULE A15
POWER SUPPLY MODULE A30-31
SECTION C-C
PARTIAL SECTION H-H
FOR -031 & 41
PACKAGING REFERENCE DRAWINGS
1. AGC CONNECTOR COVER KIT 2014399
2. AGC HANDLING FIXTURE ASSY 2014282
3. AGC SHIPPING CONTAINER 1006421
NOTES CONT'D:
39. 'A' DIM TAKEN 3.50 FROM EDGE OF FIND NO.35
40. 'B' DIM TAKEN 3.50 FROM EDGE OF FIND NO.35
41. USE FOLLOWING PROCEDURE FOR INSTALLATION OF VIBRATION DAMPENING PAD, FIND NO. 78 AND SHIM, FIND NO. 79
(A) MEASURE DIMENSIONS 'A' & 'B' (SEE PARTIAL SECTION H-H)
(B) TOTAL DIMENSION OF PAD, FIND NO. 78, SHIM FIND NO. 79, & BONDED MATERIAL PER NOTE (E&F) MUST BE EQUAL TO THE AVERAGE OF DIMENSIONS 'A' & 'B' PLUS .012 ±.004. THIS TOTAL DIMENSION MUST BE OBTAINED BY MACHINING THE SHIM, FIND NO. 79 TO THE REQUIRED THICKNESS PRIOR TO BONDING TO FIND NO. 78
(C) BOND FIND NO. 79, AFTER MACHINING TO THICKNESS, TO FIND NO 78 USING 1006338 USE BONDING MATERIAL SPARINGLY
(D) BOND ASSY OF FIND NO. 78, 79 TO FIND NO. 56 USING 1006338 BOND IN CENTER AREA ONE ON BOTH ENDS, FIND NO. 79 TO INTERFACE WITH FIND NO. 56
42. WHEN FIND NO.66, 34, 35, 37, OR 6 IS REMOVED AND REPLACED REPEAT NOTE 41
43. FIND NO'S 81 THRU 84 TO BE USED AT ALL TIMES THREADED HOLES ARE NOT IN USE. THIS INCLUDES SHIPPING. ALL SCREWS SHALL BE TORQUED SUFFICIENTLY TO SEAL THREADED HOLE. FIND NO. 83 TO BE TORQUED 7.0 TO 8.5 IN/LBS, FIND NO. 81 TO BE TORQUED TO 10.0 IN INCH POUNDS. ALL MAGNAPAKS NOT ASSEMBLED TO COMPUTER WHEN SHIPPED BUT REQUIRED SHALL BE IDENTIFIED PER NO 10.2.2.9 & SHIPPED UNASSEMBLED
44. PRIOR TO INSTALLATION INTO SPACECRAFT SEAL EXPOSED HARDWARE & CONNECTOR COMPUTER INTERFACE WITH .002 MIN THICK COATING OF FIND NO. 80
COMPUTER ASSY DIM. SHALL NOT BE EXCEEDED. CURE AT ROOM TEMP FOR 24 HOURS
45. TORQUE FOR PLUG OF FIND NO. 56 SHALL BE 25-35 IN/LBS
46. WITH A PRESSURE DIFFERENTIAL OF 2.5 PSIG MAX. IN THE COMPUTER, THE MAX DEFLECTION OF FIND NO. STRAY 'A' COVER SHALL BE .125
47. FOR AGC WIRE LIST FOR PARTICULAR CONFIGURATIONS USE 2003058ANI THE APPLICABLE WIRING CHART FROM TRAY 'A' WIRED ASSEMBLY 2003192
NOTES (CONT)
33. SHIM, AS REQUIRED, PRIOR TO ASSY OF FIND NO. 6, SURFACE C TO WITHIN ±.002 OF SURFACE B USING FIND NO. 72, INCL. TO INCLUDE .064 REF DIMENSION OF FIND NO. 72
34. SHIM, AS REQUIRED, PRIOR TO ASSY OF FIND NO. 6, SURFACE C TO WITHIN ±.002 OF SURFACE B USING FIND NO. 71
35. USE TRAY A WIRED ASSY PART NO. 2003092-041 OR PART NO. 2003092-061 OR PART NO. 2003092-071
36. FOR -031 CONFIGURATION ONLY USE LOGIC MODULE A1 THRU A24 PART NOS. 2003888-011 THRU 2003888-231, SEE CHART 'A'
37. FOR -041 & 41 CONFIGURATION ONLY USE LOGIC MODULE A1 THRU A24, FINC NOS. 15 THRU 35, PART NOS. 2003121-011 THRU 2003121-231 AND/OR 2003888-011 THRU 2003888-231, SEE CHART 'A'
38. WHEN A COMPUTER IS COMPRISED OF LOGIC MODULES A1 THRU A24, PART NOS. 2003888-011 THRU 2003888-231 AND A TRAY 'A' WIRED ASSY 2003092-041 OR 2003092-071 IT SHALL BE DESIGNATED 2003993-031
UNLESS OTHERWISE SPECIFIED DIMENSIONS ARE IN INCHES CAPACITOR VALUES ARE IN µf RESISTOR VALUES ARE IN OHMS TOLERANCES ON FRACTIONS ±1/64 ANGLES ±
DO NOT SCALE THIS DRAWING
MATERIAL
NEXT ASSY
USED ON
APPLICATION
PART OR IDENTIFYING NO
NOMENCLATURE OR DESCRIPTION
FIND NO
LIST OF MATERIALS
MIT INSTRUMENTATION LAB CAMBRIDGE MASS
MANNED SPACECRAFT CENTER HOUSTON TEXAS
COMPUTER ASSEMBLY
CODE IDENT NO 80230
SIZE J
DRAWING NO 2003993
SCALE
SHEET 2 OF 2

CHART A SEE NOTES 36 & 37				
PART NO FOR-0P-021A		PART NO FOR-0P-021A		MODULES
	-001	2003868	-001	LOGIC MODULE A1
2003421	-021		-021	A2
	-031		-031	A3
	-041		-041	A4
	-051		-051	A5
	-061		-061	A6
	-071		-071	A7
	-081		-081	A8-A11
	-091		-091	A12
	-111		-111	A13
	-121		-121	A14
	-131		-131	A15
	-141		-141	A16
	-151		-151	A17
	-161		-161	A18
	-171		-171	A19
	-181		-181	A20
	-191		-191	A21
	-211		-211	A22
	-221		-221	A23
2003421	-231	2003868	-231	LOGIC MODULE A24

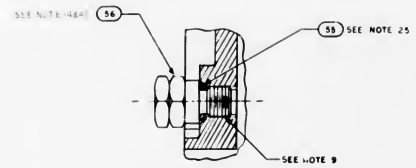

PARTIAL SECTION F F
SCALE: 2/1

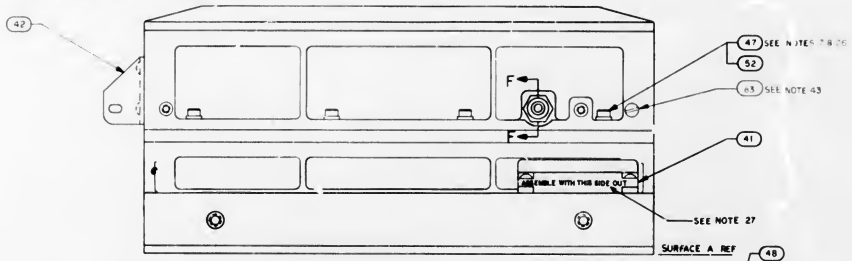

VIEW B-B

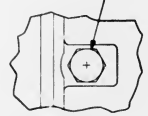

VIEW E-E

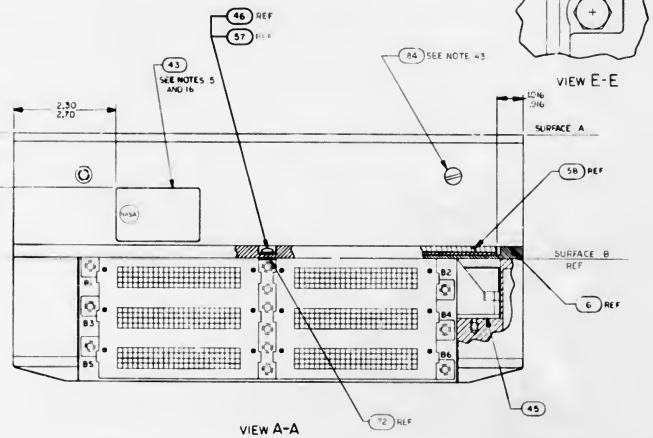

VIEW A-A

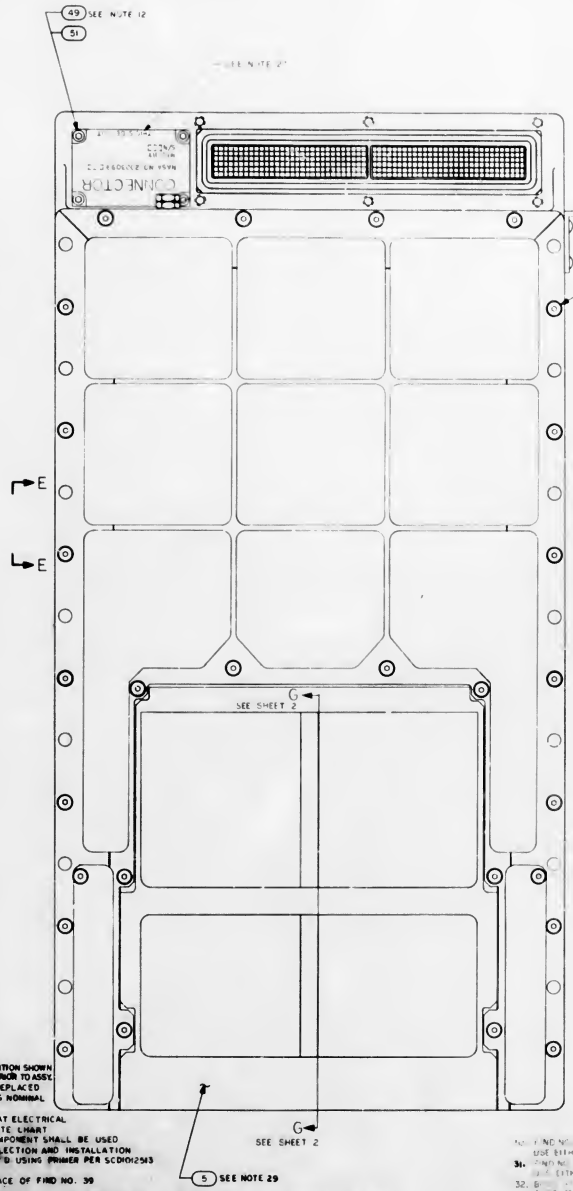

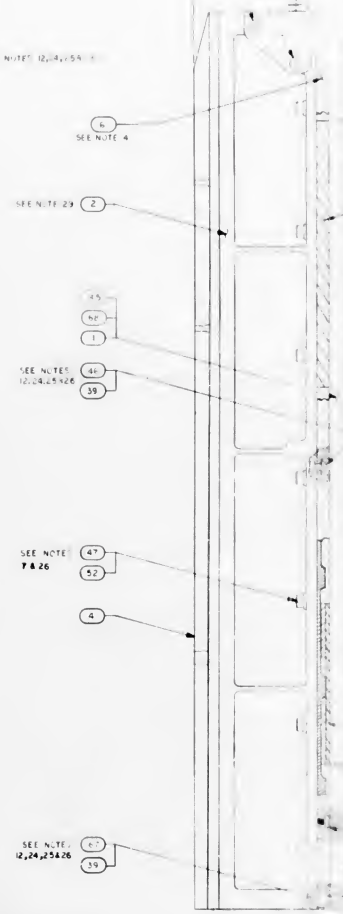

NOTES:
1. INTERPRET DRAWING IN ACCORDANCE WITH STANDARDS PRESCRIBED BY MIL-D-70327
2. PHANTOM LINES DENOTE AGC COLDPLATE AND HANDLING FIXTURE TO BE SUPPLIED BY NORTH AMERICAN AVIATION, INC
3. ADD SILICONE COMPOUND 1006679 TO MODULE MATING METAL SURFACES AND TRAY MATING SURFACES
4. ASSEMBLE FIND NO 53 AND FIND NO 63 TO FIND NO 6 AND FIND NO 6 TO FIND NO 2 PRIOR TO ASSEMBLY OF FIND NO 2 TO FIND NO 1 OR FIND NO 68 OR FIND NO 85
5. BOND FIND NO 43 TO FIND NO 1 OR FIND NO 68 OR FIND NO 85 PER NO 1002.9, MIL-1100.11
6. UNLESS OTHERWISE SPECIFIED TORQUE ALL MODULE MOUNTING SCREWS 15/19 INCH POUNDS
7. TORQUE FIND NO 47 TO 28/32 INCH POUNDS
8. FINISH IS REQUIRED TO SATISF. ICD NAA-SID-10001
9. APPLY SEALING COMPOUND MIL-S-22473 GRADE H TO FIND NO 53, FIND NO 56 AND FIND NO 44
10. COMPLETED ASSEMBLY SHALL BE TESTED IN ACCORDANCE WITH AND SHALL MEET ALL REQUIREMENTS OF PS206007 FOR-001 & PS206010 FOR-001 & SUBSEQUENT
11. TORQUE FOR FIND NO 36 AND FIND NO 69 MOUNTING SCREWS TO BE 10/12 INCH POUNDS
12. TORQUE FOR FIND NO 46, 49, 50 AND 67 TO BE 18/22 INCH POUNDS
13. TORQUE FOR FIND NO 53 TO BE 4/6 INCH POUNDS
14. TORQUE FOR FIND NO 44 AND FIND NO 56 TO BE 137/157 INCH POUNDS
15. FIND NO 40 SHALL BE SUPPLIED AS PART OF THIS ASSEMBLY
16. MARK COMPUTER ASSEMBLY AND PELATED PART NO., APPLICABLE DASH NO., SERIAL NO. AND CONTRACT NO. PER 1004260 AND SERIALIZE PER NO 1002023
17. FINISH SURFACE [illegible] PER ICD NAA WH01-01302-116 THIS ASSEMBLY MUST BE CAPABLE OF MEETING ELECTRICAL BONDING REQUIREMENTS OF ICD NAA WH01-01302-116
18. BOND FIND NO. 58 TO FIND NO. 6 IN POSITION SHOWN USING 1006338 CURE AT ROOM TEMP 24 HRS PRIOR TO ASSY.
19. REFERENCED MODULES MUST NOT BE REPLACED OR INTERCHANGED WITHOUT REPEATING NOMINAL SELECTION PROCEDURE PER NOTE 10
20. THE VALUE OF C1 TO BE DETERMINED AT ELECTRICAL TEST AND SELECTED FROM APPROPRIATE CHART
21. WHEN THE VALUE OF C1 IS ZERO NO COMPONENT SHALL BE USED
22. ENCAPSULATE AREA SHOWN AFTER SELECTION AND INSTALLATION OF C1 USING NO 1002009 RE 7800 C OR D USING PRIMER PER SCD 10 2543
23. WELD PER NO 1002009
24. ASSEMBLE HARDWARE WITH SMOOTH FACE OF FIND NO. 39 IN CONTACT WITH SCREW HEAD
25. FIND NO 40, 46, 58 & 57 TO BE DISCARDED AND REPLACED WITH NEW PARTS EACH TIME THEY ARE DISASSEMBLED
26. SEAL EXPOSED HARDWARE ASSEMBLIES WITH .002 MIN THICK COATING OF FIND NO 80 OVERALL COMPUTER ASSEMBLY DIMENSIONS SHALL NOT BE EXCEEDED. CURE AT ROOM TEMP 24 HRS
27. STENCILING SHOWN FOR ORIENTATION ONLY
28. KEEP ALL MATING THREADS OF SCREWS, TRAY AND MID SPACER INSERTS FREE OF SILICONE COMPOUND
29. FILL FEMALE INSULATORS OF B41 AND B42 CONNECTORS USING FIND NO 70 PRIOR TO ASSEMBLY OF FIND NO 70 TO FIND NO 2

[illegible] FIND NO [illegible] USE EITHER [illegible]
31. FIND NO [illegible] EITHER [illegible]
32. [illegible] NO EDGES [illegible]
33. SEE SHEET 2
34. SEE SHEET 2
35. SEE SHEET 2
36. SEE SHEET 2
37. SEE SHEET 2
38. SEE SHEET 2
39. SEE SHEET 2
40. SEE SHEET 2
41. SEE SHEET 2
42. SEE SHEET 2
47. SEE SHEET 2

2003393

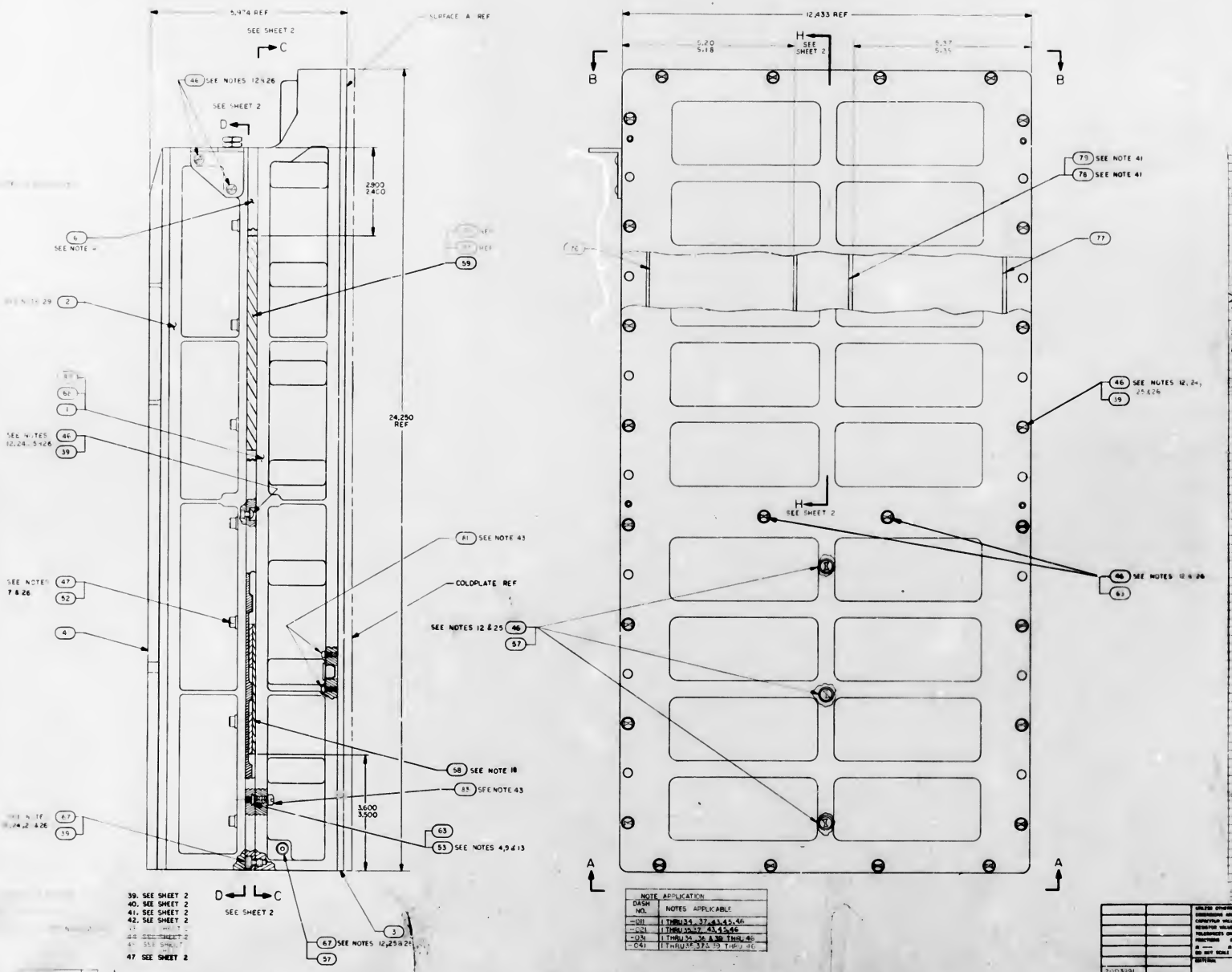

NOTE APPLICATION	
DASH NO.	NOTES APPLICABLE
-011	1 THRU 34, 37, 43, 45, 46
-021	1 THRU 35, 37, 43, 45, 46
-031	1 THRU 34, 36 & 38 THRU 46
-041	1 THRU 33 & 35 THRU 46

1	1	1	1	2003111-031	ERASABLE MEMORY MODULE B12	86
—	1	—	—	2005092-071	TRAY "K" WIRED ASSY	85
4	4	4	4	1010485-432	SCREW, NYLON	84
11	11	11	11	1010485-332	SCREW, NYLON	83
6	6	6	6	1010485-236	SCREW, NYLON	82
28	28	28	28	1010485-100	SCREW, NYLON	81
AR	AR	AR	AR	1006338-003	SEALING COMPOUND, SILICONE RUBBER	80
—	1	—	—	2004691	SHIM VIBRATION DAMPENING	79
—	1	—	—	2004690	PAD VIBRATION DAMPENING	78
—	1	—	—	2004899-007	PAD VIBRATION	77
—	1	—	—	2004899-006	PAD VIBRATION	76
—	AR	—	—	2004888-002	SHIM AGC	75
—	AR	—	—	2004888-001	SHIM AGC	74
—	1	—	—	2005092-041	TRAY "K" WIRED ASSY	73
AR	AR	AR	AR	2010801	SHIM AGC	72
AR	AR	AR	AR	2010800-000	SHIM	71
><	><	><	><	SEE NOTE 47	AGC WIRE LIST	REF
AR	AR	AR	AR	1006654	SILICONE COMPOUND	70
2	2	2	—	2003082-011	POWER SUPPLY MODULE A30-31	69
1	—	1	—	SEE NOTE 40	TRAY "A" WIRED ASSY	68
33	33	33	33	2004732-002	SCREW, COATED	67
AR	AR	AR	AR	1006396-3/90	SEALING COMPOUND, SILICONE RUBBER	66
AR	AR	AR	AR	1006776-22	INSULATION, SLEEVING ELECTRICAL	65
1	1	1	1	SEE NOTE 20	CAPACITOR	64
10	10	10	10	2004148-007	WASHER, FLAT	63
1	1	1	1	SEE NOTE 31	SENSE AMPLIFIER MODULE, FIXED MEMORY B14	62
—	—	AR	AR	2004888-002	SHIM AGC	61
—	—	AR	AR	2004888-001	SHIM AGC	60
—	1	1	1	2004899-001	PAD VIBRATION	59
—	1	1	1	2003970	VIBRATION PAD ASSY	58
4	4	4	4	NAS1598-008N	WASHER, SEALING	57
—	1	1	1	2018773	VALVE PRESSURE ASSEMBLY	56
—	1	1	1	1000159-5	PACKING, PREFORMED "O" RING	55
2	—	2	2	2004984-001	WASHER, FLAT	54
6	—	8	8	2004330	PAD, THREADED	53
18	18	18	18	2004894-014	WASHER, FLAT	52
4	4	4	4	2004894-012	WASHER, FLAT	51
2	2	2	2	1004489-36	SCREW, HEX SOCKET HEAD	50
4	4	4	4	1004722-2	SCREW, CAPTIVE	49
1	1	1	1	1000159-7	PACKING, PREFORMED "O" RING	48
18	18	18	18	2004732-003	SCREW, COATED	47
33	33	33	33	2004732-001	SCREW, COATED	46
2	2	2	2	2006347	GASKET, PLATE	45
1	1	1	1	2004986	PLUG, MACHINE THREAD	44
1	1	1	1	1004260-19	NAME PLATE, TYPE 2	43
1	1	1	1	2004113-001	BRACKET, CABLE	42
1	1	1	1	2005089-011	CONNECTOR ASSEMBLY	41
1	1	1	1	1006380	GASKET, RETAINED	40
58	58	58	58	2004707	WASHER, KNURLED	39
3	3	3	3	2003067-041	INTERFACE MODULE A27-29	38
2	2	2	2	2003170-031	INTERFACE MODULE A25-26	37
—	—	—	2	2003081-011	POWER SUPPLY MODULE A30-31	36
—	1	1	1	SEE NOTES 36 & 37	LOGIC MODULE A24	35
1	1	1	1		LOGIC MODULE A23	34
—	1	1	1		LOGIC MODULE A22	33
—	1	1	1		LOGIC MODULE A21	32
—	1	1	1		LOGIC MODULE A20	31
—	1	1	1		LOGIC MODULE A19	30
—	1	1	1		LOGIC MODULE A18	29
—	1	1	1		LOGIC MODULE A17	28
—	1	1	1		LOGIC MODULE A16	27
—	1	1	1		LOGIC MODULE A15	26
—	1	1	1		LOGIC MODULE A14	25
—	1	1	1		LOGIC MODULE A13	24
—	1	1	1		LOGIC MODULE A12	23
4	4	4	4		LOGIC MODULE A8-11	22
—	1	1	1		LOGIC MODULE A7	21
—	1	1	1		LOGIC MODULE A6	20
—	1	1	1		LOGIC MODULE A5	19
—	1	1	1		LOGIC MODULE A4	18
—	1	1	1		LOGIC MODULE A3	17
—	1	1	1		LOGIC MODULE A2	16
—	1	1	1	SEE NOTES 36 & 37	LOGIC MODULE A1	15
2	2	2	2	2003140-031	ROPE DRIVER MODULE B16-17	14
—	1	1	1	2007027-031	STRAND SELECT MODULE B15	13
—	1	1	1	SEE NOTE 30	SENSE AMPL MOD, ERASABLE MEMORY B13	12
—	1	1	1	2003118-031	ERASABLE MEMORY MODULE B12	11
—	1	1	1	2003126-031	CURRENT SWITCH MODULE B11	10
2	2	2	2	2003114-021	ERASABLE DRIVER MODULE B9-10	9
—	1	1	1	2003083-021	ALARM MODULE B8	8
—	1	1	1	2003036-031	OSCILLATOR MODULE A7	7
—	1	1	1	2003978-001	MID SPACER	6
—	1	1	1	2003059-021	INTERCONNECTION HEADER ASSEMBLY	5
—	1	1	1	2003976-011	TRAY B COVER	4
—	1	1	1	2003977-011	TRAY A COVER	3
—	1	1	1	2003093-021	TRAY B WIRED ASSEMBLY	2
—	—	—	1	2005092-031	TRAY A WIRED ASSEMBLY	1
REF DES	REVISION	QTY REQD	PART OR IDENTIFYING NO	NOMENCLATURE OR DESCRIPTION	FIND NO	
-41	031	1	-011			

LIST OF MATERIALS

2003991	NEXT ASSY	USED ON
	APPLICATION	

UNLESS OTHERWISE SPECIFIED DIMENSIONS ARE IN INCHES CAPACITOR VALUES ARE IN µf RESISTOR VALUES ARE IN OHMS TOLERANCES ON FRACTIONS ±1/64 DECIMALS .XX ±.01 .XXX ±.005 DO NOT SCALE THIS DRAWING

MATERIAL —

SELF INSTRUMENTATION LAB CAMBRIDGE MASS

MANNED SPACECRAFT CENTER HOUSTON TEXAS

COMPUTER ASSEMBLY

CODE IDENT NO	SIZE	DRAWING NO
80230	J	2003993

SCALE — SHEET 1 OF 2

REVISIONS

SYM	ZONE	REV NUMBER	BY	CHK	DATE	APPROVED
G		REVISED PER TDRR 34265				
N		REVISED PER TDRR 3606				

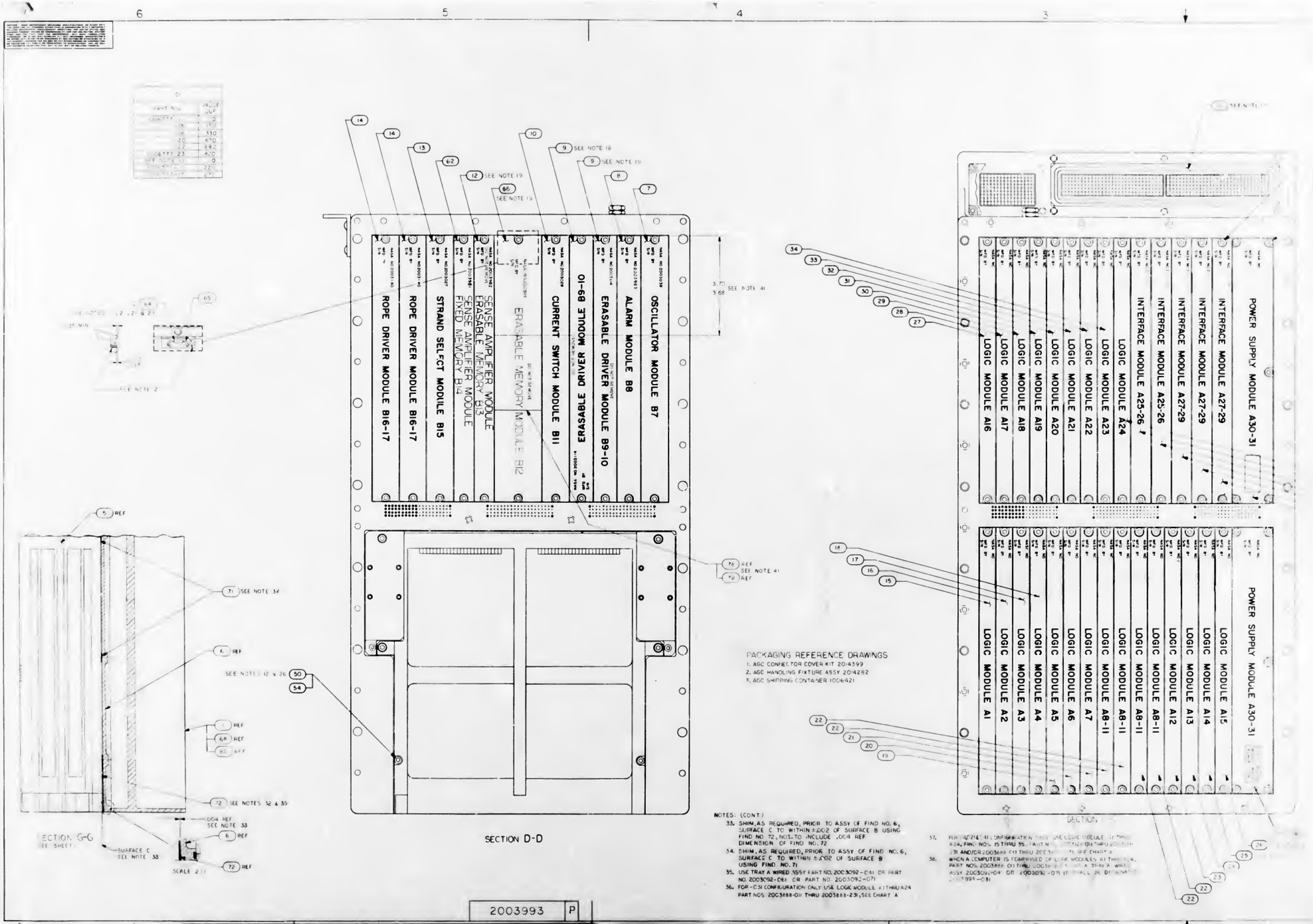
SECTION D-D
SECTION G-G
SCALE 2:1
OSCILLATOR MODULE B7
ALARM MODULE B8
ERASABLE DRIVER MODULE B9-10
ERASABLE DRIVER MODULE B11-12
CURRENT SWITCH MODULE B11
ERASABLE MEMORY MODULE B12
SENSE AMPLIFIER MODULE ERASABLE MEMORY B13
SENSE AMPLIFIER MODULE FIXED MEMORY B14
STRAND SELECT MODULE B15
ROPE DRIVER MODULE B16-17
ROPE DRIVER MODULE B16-17
POWER SUPPLY MODULE A30-31
INTERFACE MODULE A27-29
INTERFACE MODULE A27-29
INTERFACE MODULE A27-29
INTERFACE MODULE A25-26
INTERFACE MODULE A25-26
LOGIC MODULE A24
LOGIC MODULE A23
LOGIC MODULE A22
LOGIC MODULE A21
LOGIC MODULE A20
LOGIC MODULE A19
LOGIC MODULE A18
LOGIC MODULE A17
LOGIC MODULE A16
LOGIC MODULE A15
LOGIC MODULE A14
LOGIC MODULE A13
LOGIC MODULE A12
LOGIC MODULE A8-11
LOGIC MODULE A8-11
LOGIC MODULE A8-11
LOGIC MODULE A8-11
LOGIC MODULE A7
LOGIC MODULE A6
LOGIC MODULE A5
LOGIC MODULE A4
LOGIC MODULE A3
LOGIC MODULE A2
LOGIC MODULE A1
POWER SUPPLY MODULE A30-31
SECTION
PACKAGING REFERENCE DRAWINGS
1. AGC CONNECTOR COVER KIT 2014399
2. AGC HANDLING FIXTURE ASSY 2014282
3. AGC SHIPPING CONTAINER 1006421
NOTES: (CONT.)
33. SHIM, AS REQUIRED, PRIOR TO ASSY OF FIND NO. 6, SURFACE C TO WITHIN ±.002 OF SURFACE B USING FIND NO. 72, NOT TO INCLUDE .004 REF DIMENSION OF FIND NO. 72
34. SHIM, AS REQUIRED, PRIOR TO ASSY OF FIND NO. 6, SURFACE C TO WITHIN ±.002 OF SURFACE B USING FIND NO. 71
35. USE TRAY A WIRED ASSY PART NO. 2003092-041 OR PART NO. 2003092-061 OR PART NO. 2003092-071
36. FOR-CSM CONFIGURATION ONLY USE LOGIC MODULE A1 THRU A24 PART NOS. 2003888-011 THRU 2003888-231, SEE CHART A
37. FOR-AS-214 & 41 CONFIGURATION ONLY USE LOGIC MODULE A1 THRU A24, FIND NOS. 15 THRU 35, PART NOS. 2003888-011 THRU 2003888-231 AND/OR 2003888-041 THRU 2003888-241, SEE CHART A
38. WHEN A COMPUTER IS COMPRISED OF LOGIC MODULES A1 THRU A24, PART NOS. 2003888-011 THRU 2003888-231 USE A TRAY A WIRED ASSY 2003092-041 OR 2003092-071 IT SHALL BE DESIGNATED 2003993-031
2003993 P

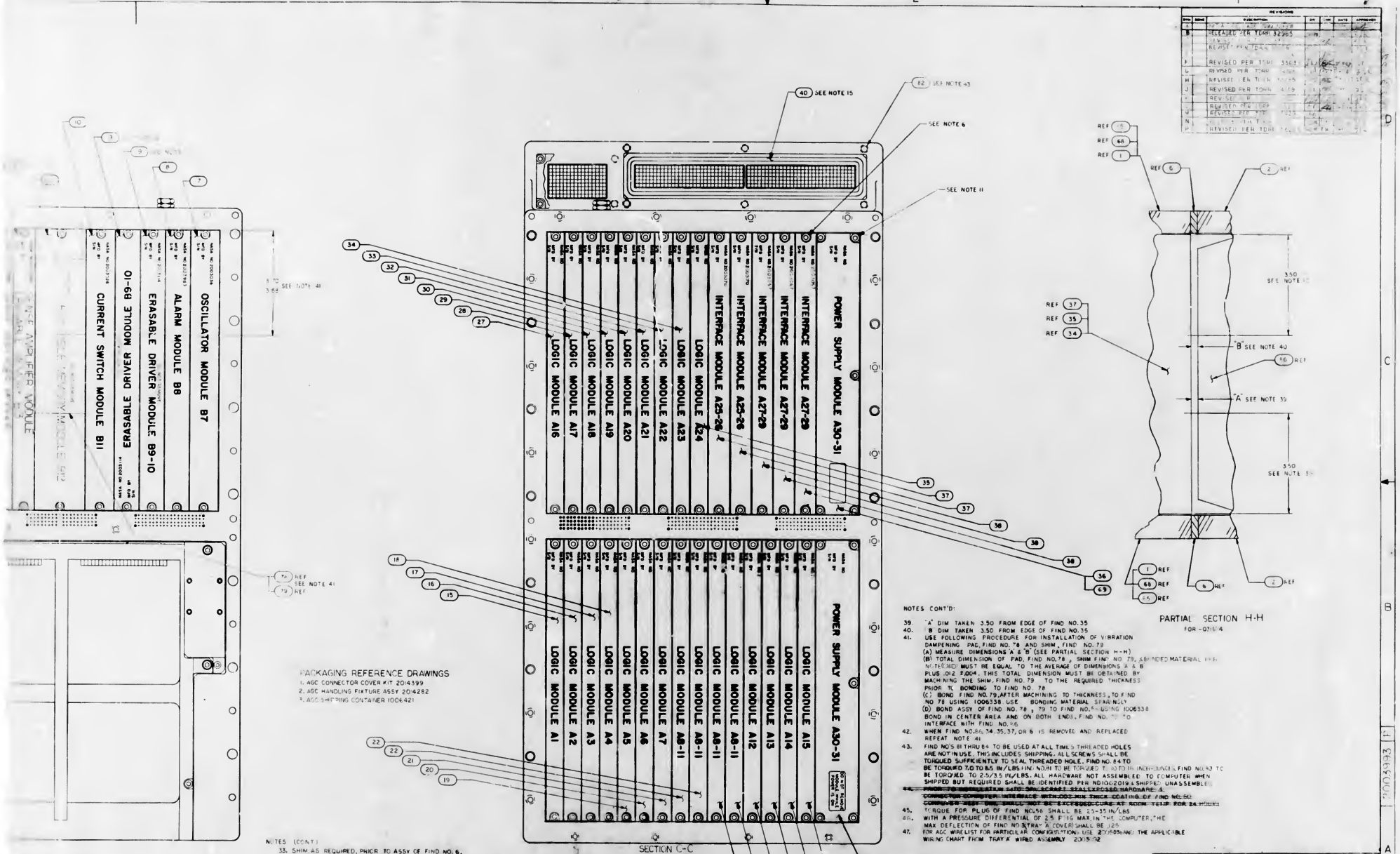
SEE NOTE 15
SEE NOTE 43
SEE NOTE 6
SEE NOTE 11
SEE NOTE 41
OSCILLATOR MODULE B7
ALARM MODULE B8
ERASABLE DRIVER MODULE B9-10
CURRENT SWITCH MODULE B11
POWER SUPPLY MODULE A30-31
INTERFACE MODULE A27-29
INTERFACE MODULE A25-26
LOGIC MODULE A24
LOGIC MODULE A23
LOGIC MODULE A22
LOGIC MODULE A21
LOGIC MODULE A20
LOGIC MODULE A19
LOGIC MODULE A18
LOGIC MODULE A17
LOGIC MODULE A16
LOGIC MODULE A15
LOGIC MODULE A14
LOGIC MODULE A13
LOGIC MODULE A12
LOGIC MODULE A11
LOGIC MODULE A10
LOGIC MODULE A9
LOGIC MODULE A8
LOGIC MODULE A7
LOGIC MODULE A6
LOGIC MODULE A5
LOGIC MODULE A4
LOGIC MODULE A3
LOGIC MODULE A2
LOGIC MODULE A1
SEE NOTE 19
SECTION C-C
PARTIAL SECTION H-H
FOR -0181-4
"B" SEE NOTE 40
"A" SEE NOTE 39
3.50 SEE NOTE 41
D-D
PACKAGING REFERENCE DRAWINGS
1. AGC CONNECTOR COVER KIT 2014399
2. AGC HANDLING FIXTURE ASSY 2014282
3. AGC SHIPPING CONTAINER 1006421
NOTES CONT'D:
39. "A" DIM TAKEN 3.50 FROM EDGE OF FIND NO.35
40. "B" DIM TAKEN 3.50 FROM EDGE OF FIND NO.35
41. USE FOLLOWING PROCEDURE FOR INSTALLATION OF VIBRATION DAMPENING PAD, FIND NO. 78 AND SHIM, FIND NO. 79
(A) MEASURE DIMENSIONS "A" & "B" (SEE PARTIAL SECTION H-H)
(B) TOTAL DIMENSION OF PAD, FIND NO.78, SHIM FIND NO 79, & BONDED MATERIAL FIND NO 78 USING 1006338 MUST BE EQUAL TO THE AVERAGE OF DIMENSIONS A & B PLUS .012 ±.004. THIS TOTAL DIMENSION MUST BE OBTAINED BY MACHINING THE SHIM, FIND NO. 79 TO THE REQUIRED THICKNESS PRIOR TO BONDING TO FIND NO. 78
(C) BOND FIND NO.79, AFTER MACHINING TO THICKNESS, TO FIND NO 78 USING 1006338 USE BONDING MATERIAL SPARINGLY
(D) BOND ASSY OF FIND NO. 78, 79 TO FIND NO.56 USING 1006338 BOND IN CENTER AREA AND ON BOTH ENDS, FIND NO. 79 TO INTERFACE WITH FIND NO.56
42. WHEN FIND NO.66, 34, 35, 37, OR 6 IS REMOVED AND REPLACED REPEAT NOTE 41
43. FIND NO'S 81 THRU 84 TO BE USED AT ALL TIMES THREADED HOLES ARE NOT IN USE. THIS INCLUDES SHIPPING. ALL SCREWS SHALL BE TORQUED SUFFICIENTLY TO SEAL THREADED HOLE. FIND NO. 84 TO BE TORQUED 7.0 TO 8.5 IN/LBS. FIND NO.81 TO BE TORQUED 7.0 TO 16 INCH-OUNCES. FIND NO.83 TO BE TORQUED TO 2.5/3.5 IN/LBS. ALL HARDWARE NOT ASSEMBLED TO COMPUTER WHEN SHIPPED BUT REQUIRED SHALL BE IDENTIFIED PER ND1062019 & SHIPPED UNASSEMBLED
44. ~~FOR CONFIGURATION 2400 SPACECRAFT STALE EXPOSED HARDWARE & CONNECTOR CONNECTOR INTERFACE WITH .002 MIN THICK COATING OF FIND NO.50 CONDUCTIVE RTV SHALL NOT BE EXCEEDED. CURE AT ROOM TEMP FOR 24 HOURS~~
45. TORQUE FOR PLUG OF FIND NO.56 SHALL BE 2.5-3.5 IN/LBS
46. WITH A PRESSURE DIFFERENTIAL OF 2.5 PSIG MAX IN THE COMPUTER, THE MAX DEFLECTION OF FIND NO.3 TRAY "A" COVER SHALL BE .125
47. FOR AGC WIRELIST FOR PARTICULAR CONFIGURATION USE 2003036 AND THE APPLICABLE WIRING CHART FROM TRAY "A" WIRED ASSEMBLY 2003-092
NOTES (CONT.)
33. SHIM AS REQUIRED, PRIOR TO ASSY OF FIND NO. 6, SURFACE C TO WITHIN ±.002 OF SURFACE B USING FIND NO. 72, NOTE TO INCLUDE .004 REF DIMENSION OF FIND NO. 72
34. SHIM AS REQUIRED, PRIOR TO ASSY OF FIND NO. 6, SURFACE C TO WITHIN ±.002 OF SURFACE B USING FIND NO. 71
35. USE TRAY A WIRED ASSY PART NO. 2003092-041 OR PART NO. 2003092-061 OR PART NO. 2003092-071
36. FOR -031 CONFIGURATION ONLY USE LOGIC MODULE A1 THRU A24 PART NOS 2003888-011 THRU 2003888-231, SEE CHART "A"
37. FOR -0214 & -041 CONFIGURATION ONLY USE LOGIC MODULE A1 THRU A24, FIND NOS. 15 THRU 35, PART NOS. 2003121-011 THRU 2003121-231 AND/OR 2003888-011 THRU 2003888-231, SEE CHART "A" WHEN A COMPUTER IS COMPRISED OF LOGIC MODULES A1 THRU A24, PART NOS. 2003888-011 THRU 2003888-231 AND A TRAY "A" WIRED ASSY 2003092-041 OR 2003092-071 IT SHALL BE DESIGNATED 2003993-031
REVISIONS
B RELEASE PER TCAN 32965
P REVISED PER TCR 3363
G REVISED PER TCAN
H REVISED PER TCAN
J REVISED PER TCAN
N REVISED PER TCR
P REVISED PER TCR
MIT INSTRUMENTATION LAB
MANNED SPACECRAFT CENTER
HOUSTON, TEXAS
COMPUTER ASSEMBLY
80230 J
2003993
SCALE 1/1
SHEET 2 OF 2

CHART A SEE NOTES 36&37				
PART NO. FOR -0H-0G		PART NO. FOR -0H-0G2A		MODULES
2003121	-011	2003868	-011	LOGIC MODULE A1
	-021		-021	A2
	-031		-031	A3
	-041		-041	A4
	-051		-051	A5
	-061		-061	A6
	-071		-071	A7
	-081		-081	A8-A11
	-091		-091	A12
	-111		-111	A13
	-121		-121	A14
	-131		-131	A15
	-141		-141	A16
	-151		-151	A17
	-161		-161	A18
	-171		-171	A19
	-181		-181	A20
	-191		-191	A21
	-211		-211	A22
	-221		-221	A23
2003121	-231	2003868	-231	LOGIC MODULE A24

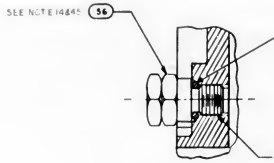

PARTIAL SECTION F F
SCALE: 2/1

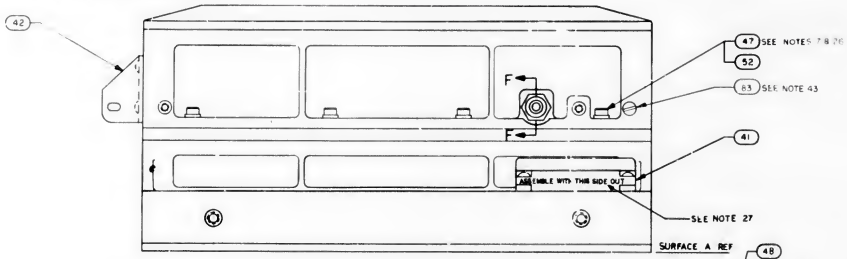

VIEW B-B

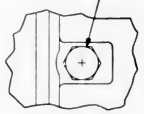

VIEW E-E

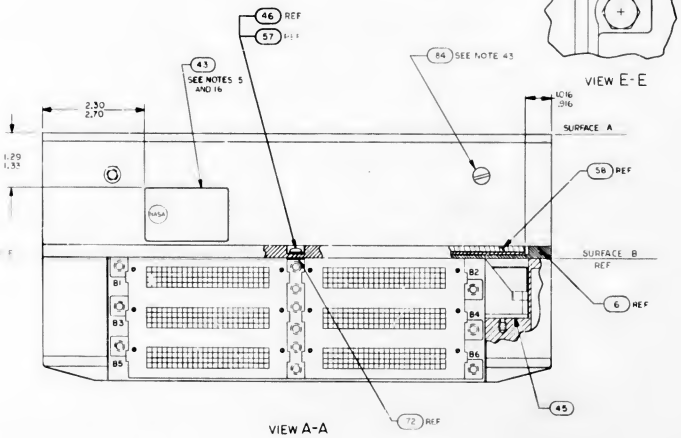

VIEW A-A

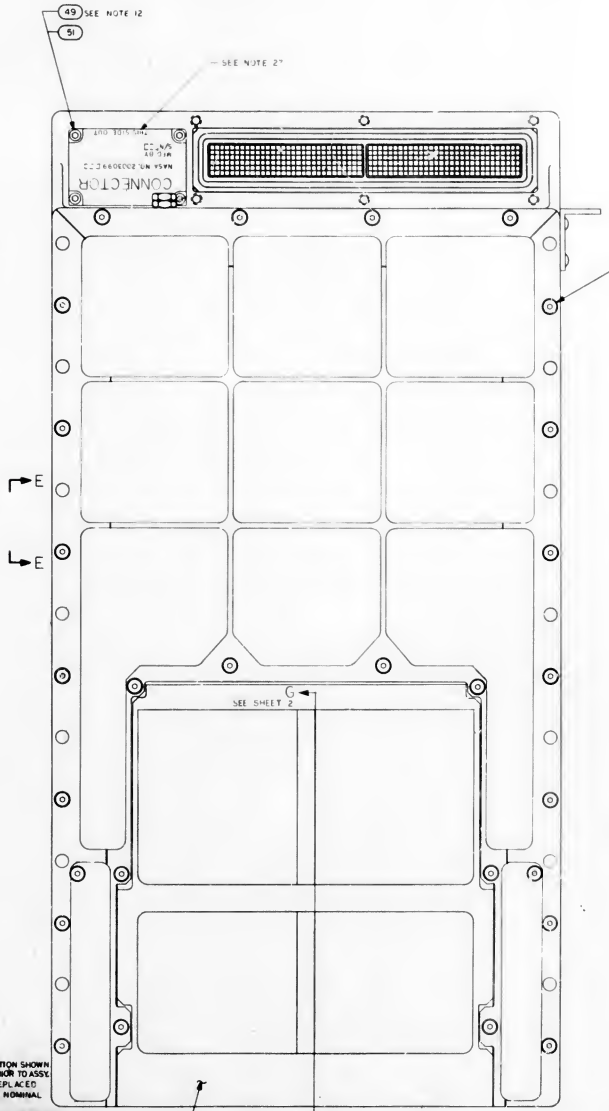

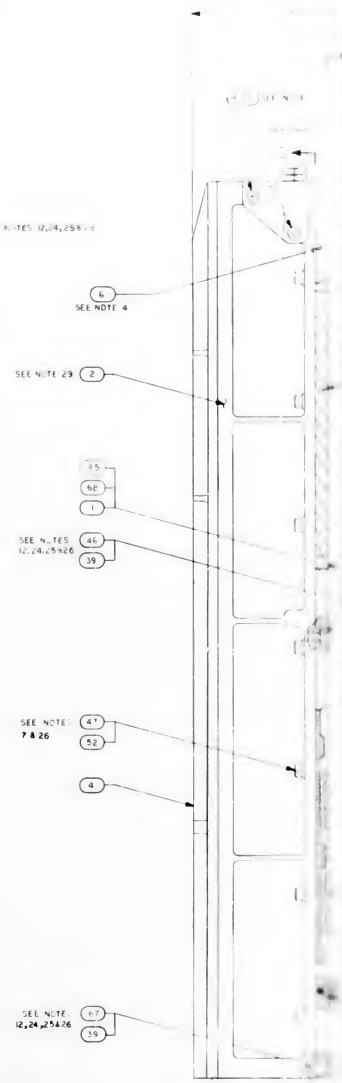

NOTES:

1. INTERPRET DRAWING IN ACCORDANCE WITH STANDARDS PRESCRIBED BY MIL-D-70327
2. PHANTOM LINES DENOTE AGC COLDPLATE AND HANDLING FIXTURE TO BE SUPPLIED BY NORTH AMERICAN AVIATION, INC
3. ADD SILICONE COMPOUND 1006879 TO MODULE MATING METAL SURFACES AND TRAY MATING SURFACES
4. ASSEMBLE FIND NO.53 AND FIND NO.63 TO FIND NO.6 AND FIND NO.6 TO FIND NO.2 PRIOR TO ASSEMBLY OF FIND NO.2 TO FIND NO.1 OR FIND NO.68 OR FIND NO.85
5. BOND FIND NO.43 TO FIND NO.1 OR FIND NO.68 OR FIND NO.85 PER ND1002219, METHOD II
6. UNLESS OTHERWISE SPECIFIED TORQUE ALL MODULE MOUNTING SCREWS 15/19 INCH POUNDS
7. TORQUE FIND NO.47 TO 28/32 INCH POUNDS
8. FINISH IS REQUIRED TO SATISFY ICD GAEC-SHO-10001
9. APPLY SEALING COMPOUND MIL-S-22473 GRADE H TO FIND NO.53, FIND NO.54 AND FIND NO.44
10. COMPLETED ASSEMBLY SHALL BE TESTED IN ACCORDANCE WITH AND SHALL MEET ALL REQUIREMENTS OF PS206007 FOR-011 & PS206030 FOR-021 & SUBSEQUENT
11. TORQUE FOR FIND NO.36 AND FIND NO.69 MOUNTING SCREWS TO BE 9/12 INCH POUNDS
12. TORQUE FOR FIND NO.46, 49, 50 AND 67 TO BE 18/22 INCH POUNDS
13. TORQUE FOR FIND NO.53 TO BE 4/6 INCH POUNDS
14. TORQUE FOR FIND NO.44 AND FIND NO.56 TO BE 137/157 INCH POUNDS
15. FIND NO.40 SHALL BE SUPPLIED AS PART OF THIS ASSEMBLY
16. MAIN COUNTER ASSEMBLY AND RELATED PART NO., APPLICABLE DASH NO., SERIAL NO. AND CONTRACT NO. PER 1004260 AND SERIALIZE PER ND1002023
17. FINISH SURFACE [illegible] PER ICD MAA MHO1-01302-116 THIS ASSEMBLY MUST BE CAPABLE OF MEETING ELECTRICAL BONDING REQUIREMENTS OF ICD MAA MHO1-01302-116
18. BOND FIND NO.58 TO FIND NO.6 IN POSITION SHOWN USING 1006338 CURE AT ROOM TEMP 24 HRS PRIOR TO ASSY.
19. REFERENCED MODULES MUST NOT BE REPLACED OR INTERCHANGED WITHOUT REPEATING NOMINAL SELECTION PROCEDURE PER NOTE 10
20. THE VALUE OF C1 TO BE DETERMINED AT ELECTRICAL TEST AND SELECTED FROM APPROPRIATE CHART
21. WHEN THE VALUE OF C1 IS ZERO NO COMPONENT SHALL BE USED
22. ENCAPSULATE AREA SHOWN AFTER SELECTION AND INSTALLATION OF C1 USING ND1002009 METHOD C OR D. USING PRIMER PER SCD1012543
23. WELD PER ND1002005
24. ASSEMBLE HARDWARE WITH SMOOTH FACE OF FIND NO. 39 IN CONTACT WITH SCREW HEAD
25. FIND NO.39, 40, 50 & 57 TO BE DISCARDED AND REPLACED WITH NEW PARTS EACH TIME THEY ARE DISASSEMBLED
26. SEAL EXPOSED HARDWARE ASSEMBLIES WITH .002 MIN THICK COATING OF FIND NO.80. OVERALL COMPUTER ASSEMBLY UNBRACKETS SHALL NOT BE EXCEEDED CURE AT ROOM TEMP 24 HRS
27. STENCILING SHOWN FOR ORIENTATION ONLY
28. KEEP ALL MATING THREADS OF SCREWS, TRAY AND MID SPACER INSERTS FREE OF SILICONE COMPOUND
29. FILL FEMALE INSULATORS OF B41 AND B42 CONNECTORS USING FIND NO.70 PRIOR TO ASSEMBLY OF FIND NO.5 TO FIND NO.2
[illegible] FIND NO.12 ERASABLE MEMORY, SENSE AMPLIFIER MODULE USE EITHER [illegible] PER 39-2[illegible]
31. FIND NO.6[illegible] FIXED MEMORY, [illegible] USE EMPLOYER MODULE USE EITHER [illegible] 39-31
32. [illegible] NO EDGES TO FIND NO.5 PER [illegible] TYPE 2 [illegible] ASSEMBLY [illegible] FIND NO.6
33. SEE SHEET 7
34. SEE SHEET 2
35. SEE SHEET 2
36. SEE SHEET 2
37. SEE SHEET 2
38. SEE SHEET 2
39. SEE SHEET 2
40. SEE SHEET 2
41. SEE SHEET 2
42. SEE SHEET 2
[illegible] SEE SHEET [illegible]
47. SEE SHEET 2

2003993

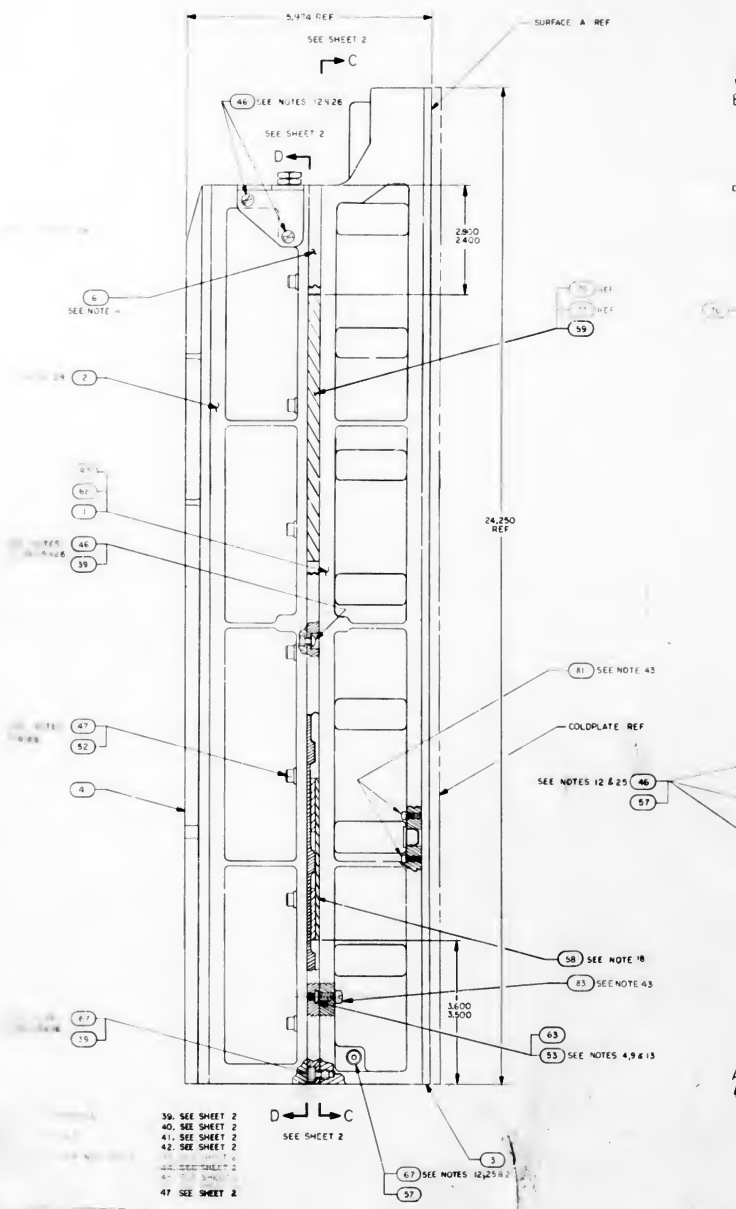

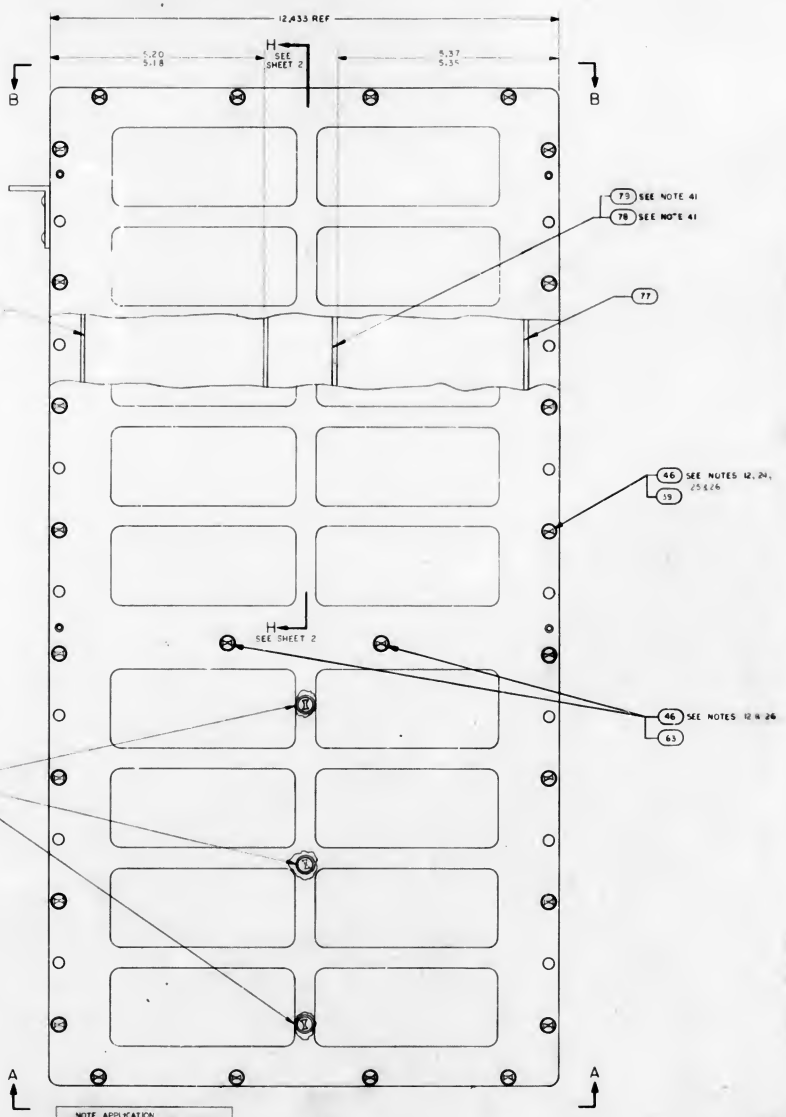

NOTE APPLICATION	
DASH NO.	NOTES APPLICABLE
-011	1 THRU 34, 37, 43, 45, 46
-021	1 THRU 35, 37, 43, 45, 46
-031	1 THRU 34, 36 & 39 THRU 46
-041	1 THRU 34 & 39 THRU 46

1	1	1	1	2003111-031	ERASABLE MEMORY MODULE B12	86
—	1	—	—	2003082-011	TRAY "A" WIRED ASSY	85
4	4	4	4	1010485-432	SCREW, NYLON	84
11	11	11	11	1010485-332	SCREW, NYLON	83
6	6	6	6	1010485-235	SCREW, NYLON	82
28	28	28	28	1010485-100	SCREW, NYLON	81
AR	AR	AR	AR	1006338-003	SEALING COMPOUND, SILICONE RUBBER	80
1	1	—	—	2004830	SHIM, VIBRATION DAMPENING	79
1	1	—	—	2004630	PAD, VIBRATION DAMPENING	78
1	1	—	—	2004899-007	PAD, VIBRATION	77
1	1	—	—	2004899-006	PAD, VIBRATION	76
—	AR	—	—	2004895-002	SHIM AGC	75
—	AR	—	—	2004895-001	SHIM AGC	74
—	1	—	—	2003092-011	TRAY "B" WIRED ASSY	73
AR	AR	AR	AR	2010801	SHIM AGC	72
AR	AR	AR	AR	2010800-000	SHIM	
				SEE NOTE 47	AGC WIRE LIST	REF
AR	AR	AR	AR	1009654	SILICONE COMPOUND	70
2	2	2	—	2003092-011	POWER SUPPLY MODULE A30-31	69
1	—	1	—	SEE NOTE 39	TRAY "A" WIRED ASSY	68
33	33	33	33	2004732-002	SCREW, COATED	67
—	AR	AR	AR	1006338-003	SEALING COMPOUND, SILICONE RUBBER	66
AR	AR	AR	AR	1006776-22	INSULATION, SLEEVING ELECTRICAL	65
1	1	1	1	SEE NOTE 20	CAPACITOR	64
10	10	10	10	2004128-007	WASHER, FLAT	63
	1	1	1	SEE NOTE 31	SENSE AMPLIFER MODULE, FIXED MEMORY B14	62
	—	AR	AR	2004895-002	SHIM AGC	61
		AR	AR	2004895-001	SHIM AGC	60
	—	1	1	2004899-001	PAD VIBRATION	59
		1	1	2005370	VIBRATION PAD ASSY	58
4	4	4	4	NAS1598-D08N	WASHER, SEALING	57
	1	1	1	2018773	VALVE PRESSURE ASSEMBLY	56
	1	1	1	1000159-5	PACKING, PREFORMED "O" RING	55
2	1	2	2	2004984-001	WASHER, FLAT	54
8	—	8	8	2004130	PAD, THREADED	53
18	18	18	18	2004894-014	WASHER, FLAT	52
4	4	4	4	2004894-012	WASHER, FLAT	51
2	2	2	2	1004939-26	SCREW, HEX SOCKET HEAD	50
4	4	4	4	1004722-2	SCREW, CAPTIVE	49
1	1	1	1	1000159-7	PACKING, PREFORMED "O" RING	48
18	18	18	18	2004732-003	SCREW, COATED	47
33	33	33	33	2004732-001	SCREW, COATED	46
2	2	2	2	1006347	GASKET, PLATE	45
1	1	1	1	2004986	PLUG, MACHINE THREAD	44
1	1	1	1	1004260-19	NAME PLATE, TYPE 2	43
1	1	1	1	2004113-001	BRACKET, CABLE	42
1	1	1	1	2005089-011	CONNECTOR ASSEMBLY	41
1	1	1	1	1006380	GASKET, RETAINED	40
58	58	58	58	2004717	WASHER, KNURLED	39
3	3	3	3	2003067-041	INTERFACE MODULE A27-29	38
2	2	2	2	2003070-031	INTERFACE MODULE A25-26	37
—	—	—	2	2003087-011	POWER SUPPLY MODULE A30-31	36
1	1	1	1	SEE NOTES 36 & 37	LOGIC MODULE A24	35
1	1	1	1		LOGIC MODULE A23	34
1	1	1	1		LOGIC MODULE A22	33
1	1	1	1		LOGIC MODULE A21	32
1	1	1	1		LOGIC MODULE A20	31
1	1	1	1		LOGIC MODULE A19	30
1	1	1	1		LOGIC MODULE A18	29
1	1	1	1		LOGIC MODULE A17	28
1	1	1	1		LOGIC MODULE A16	27
1	1	1	1		LOGIC MODULE A15	26
1	1	1	1		LOGIC MODULE A14	25
1	1	1	1		LOGIC MODULE A13	24
1	1	1	1		LOGIC MODULE A12	23
4	4	4	4		LOGIC MODULE A8-11	22
1	1	1	1		LOGIC MODULE A7	21
1	1	1	1		LOGIC MODULE A6	20
1	1	1	1		LOGIC MODULE A5	19
1	1	1	1		LOGIC MODULE A4	18
1	1	1	1		LOGIC MODULE A3	17
1	1	1	1		LOGIC MODULE A2	16
1	1	1	1	SEE NOTES 36 & 37	LOGIC MODULE A1	15
2	1	2	2	2003140-031	ROPE DRIVER MODULE B8-17	14
1	1	1	1	2003102-031	STRAND SELECT MODULE B15	13
	1		1	SEE NOTE 30	SENSE AMPLIFIER MODULE, ERASABLE MEMORY B13	
1	1	1	1	2003112-031	ERASABLE MEMORY MODULE B12	11
1	1	1	1	2003128-031	CURRENT SWITCH MODULE B11	10
2	2	2	2	2003114-021	ERASABLE DRIVER MODULE B9-10	9
1	1	1	1	2003113-021	ALARM MODULE B8	8
1	1	1	1	2003036-031	OSCILLATOR MODULE B7	7
1	1	1	1	2001978-001	MID SPACER	6
	1	1	1	2003159-021	INTERCONNECTION HEADER ASSEMBLY	5
	1	1	1	2003976-011	TRAY B COVER	4
	1	1	1	2003977-011	TRAY A COVER	3
	1	1	1	2003093-021	TRAY B WIRED ASSEMBLY	2
	—	1	1	2003092-031	TRAY A WIRED ASSEMBLY	1
47	47	47	47	2003991-011		
QTY REQD	QTY REQD	QTY REQD	QTY REQD	PART OR IDENTIFYING NO	NOMENCLATURE OR DESCRIPTION	FIND NO

LIST OF MATERIALS

UNLESS OTHERWISE SPECIFIED DIMENSIONS ARE IN INCHES CAPACITOR VALUES ARE IN µf RESISTOR VALUES ARE IN OHMS TOLERANCES ON FRACTIONS ± DECIMALS ANGLES DO NOT SCALE THIS DRAWING MATERIAL	MIT INSTRUMENTATION LAB CAMBRIDGE MASS	MANNED SPACECRAFT CENTER HOUSTON TEXAS	
2003991		COMPUTER ASSEMBLY	
NEXT ASSY	USED ON	CODE IDENT NO 80230	SIZE J	DRAWING NO 2003993
APPLICATION		SCALE	SHEET 1 OF 2

REVISIONS

SYM	ZONE	REVISION	BY	CHK	DATE	APPROVAL
G		REVISED PER TDRR 34265				
N		REVISED PER TDRR 36016				
R		REVISED PER TDRR 36				

C1	
PART NO.	VALUE UUF
1006777-1	10
-15	150
-18	330
-20	470
-22	680
1006777-23	820
SEE NOTE 21	C
1006777-6	220
1006777-17	270

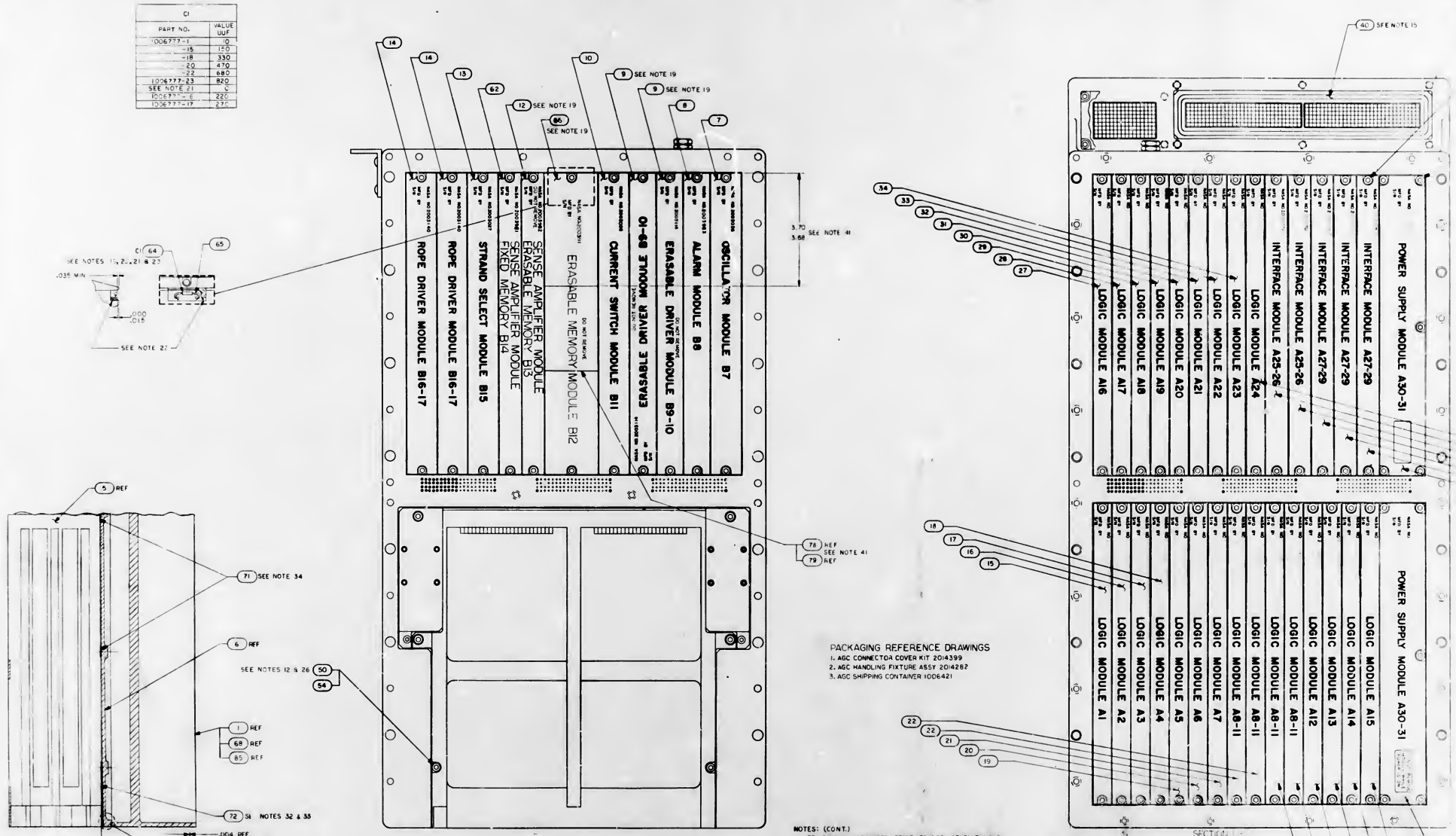

PACKAGING REFERENCE DRAWINGS
1. AGC CONNECTOR COVER KIT 2014399
2. AGC HANDLING FIXTURE ASSY 2014282
3. AGC SHIPPING CONTAINER 1006421

NOTES: (CONT.)

33. SHIM, AS REQUIRED, PRIOR TO ASSY OF FIND NO. 6, SURFACE C TO WITHIN ±.002 OF SURFACE B USING FIND NO. 72, NOT TO INCLUDE .004 REF DIMENSION OF FIND NO. 72
34. SHIM, AS REQUIRED, PRIOR TO ASSY OF FIND NO. 6, SURFACE C TO WITHIN ±.002 OF SURFACE B USING FIND NO. 71
35. USE TRAY A WIRED ASSY PART NO. 2003092-041 OR PART NO. 2003092-061 OR PART NO. 2003092-071
36. FOR -031 CONFIGURATION ONLY USE LOGIC MODULE A1 THRU A24 PART NOS. 2003888-011 THRU 2003888-231, SEE CHART 'A'
37. FOR CONFIGURATION ONLY USE LOGIC MODULE A1 THRU A24, FIND NOS. 15 THRU 35, PART NOS. 2003121-011 THRU 2003121-231 AND/OR 2003888-011 THRU 2003888-231, SEE CHART 'A'
38. WHEN A COMPUTER IS COMPRISED OF LOGIC MODULES A1 THRU A24, PART NOS. 2003888-011 THRU 2003888-231 AND A TRAY 'A' WIRED ASSY 2003092-041 OR 2003092-071 IT SHALL BE DESIGNATED 2003993-031

2003993 R

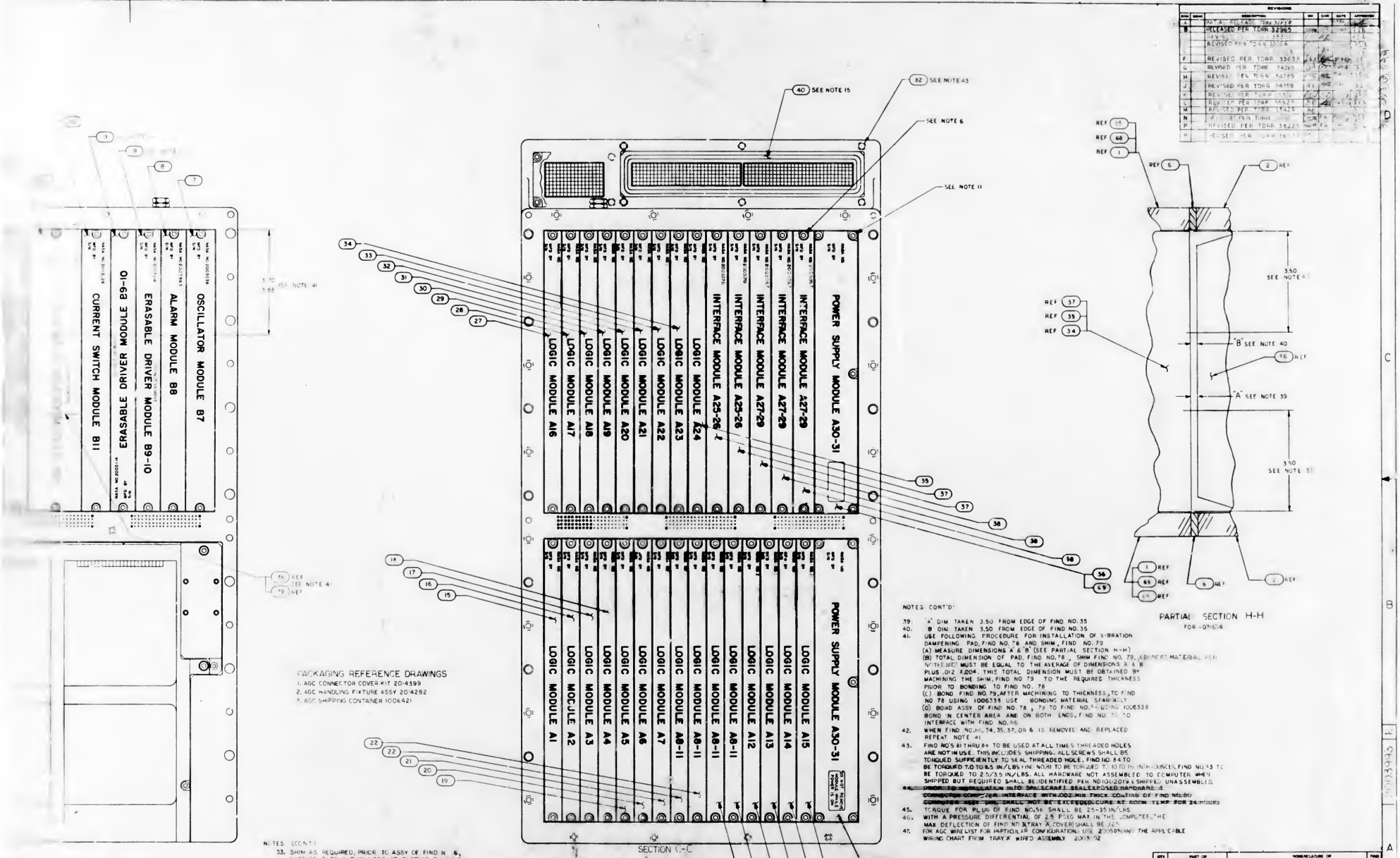
CURRENT SWITCH MODULE B11
ERASABLE DRIVER MODULE B9-10
ALARM MODULE B8
OSCILLATOR MODULE B7
LOGIC MODULE A16
LOGIC MODULE A17
LOGIC MODULE A18
LOGIC MODULE A19
LOGIC MODULE A20
LOGIC MODULE A21
LOGIC MODULE A22
LOGIC MODULE A23
LOGIC MODULE A24
INTERFACE MODULE A25-26
INTERFACE MODULE A25-26
INTERFACE MODULE A27-29
INTERFACE MODULE A27-29
INTERFACE MODULE A27-29
POWER SUPPLY MODULE A30-31
LOGIC MODULE A1
LOGIC MODULE A2
LOGIC MODULE A3
LOGIC MODULE A4
LOGIC MODULE A5
LOGIC MODULE A6
LOGIC MODULE A7
LOGIC MODULE A8-11
LOGIC MODULE A8-11
LOGIC MODULE A8-11
LOGIC MODULE A8-11
LOGIC MODULE A12
LOGIC MODULE A13
LOGIC MODULE A14
LOGIC MODULE A15
POWER SUPPLY MODULE A30-31
SEE NOTE 40
SEE NOTE 6
SEE NOTE 11
SEE NOTE 19
SEE NOTE 41
SEE NOTE 43
SECTION C-C
D-D
PACKAGING REFERENCE DRAWINGS
1. AGC CONNECTOR COVER KIT 2014399
2. AGC HANDLING FIXTURE ASSY 2014282
3. AGC SHIPPING CONTAINER 1006421
PARTIAL SECTION H-H
FOR -031 ONLY
"A" SEE NOTE 39
"B" SEE NOTE 40
3.50 SEE NOTE 40
3.50 SEE NOTE 39
REVISIONS
NOTES (CONT'D)
33. SHIM AS REQUIRED, PRIOR TO ASSY OF FIND NO. 6, SURFACE C TO WITHIN ±.002 OF SURFACE B USING FIND NO. 72, NOT TO INCLUDE .004 REF DIMENSION OF FIND NO. 72
34. SHIM AS REQUIRED, PRIOR TO ASSY OF FIND NO. 6, SURFACE C TO WITHIN ±.002 OF SURFACE B USING FIND NO. 71
35. USE TRAY A WIRED ASSY PART NO. 2003092-041 OR PART NO. 2003092-061 OR PART NO. 2003092-071
36. FOR -031 CONFIGURATION ONLY USE LOGIC MODULE A1 THRU A24 PART NOS 2003888-011 THRU 2003888-231, SEE CHART 'A'
37. FOR (-021, -041) CONFIGURATION ONLY USE LOGIC MODULE A1 THRU A24, FIND NOS. 15 THRU 35, PART NOS. 2003121-011 THRU 2003121-231 AND/OR 2003888-011 THRU 2003888-231, SEE CHART 'A'
38. WHEN A COMPUTER IS COMPRISED OF LOGIC MODULES A1 THRU A24, PART NOS. 2003888-011 THRU 2003888-231 AND A TRAY 'A' WIRED ASSY 2003092-041 OR 2003092-071 IT SHALL BE DESIGNATED 2003993-031
39. "A" DIM TAKEN 3.50 FROM EDGE OF FIND NO. 35
40. "B" DIM TAKEN 3.50 FROM EDGE OF FIND NO. 35
41. USE FOLLOWING PROCEDURE FOR INSTALLATION OF VIBRATION DAMPENING PAD, FIND NO. 76 AND SHIM, FIND NO. 79
(A) MEASURE DIMENSIONS 'A' & 'B' (SEE PARTIAL SECTION H-H)
(B) TOTAL DIMENSION OF PAD, FIND NO. 76, SHIM FIND NO. 79, & BONDED MATERIAL PER NOTE (E) MUST BE EQUAL TO THE AVERAGE OF DIMENSIONS 'A' & 'B' PLUS .012 ±.004. THIS TOTAL DIMENSION MUST BE OBTAINED BY MACHINING THE SHIM, FIND NO. 79 TO THE REQUIRED THICKNESS PRIOR TO BONDING TO FIND NO. 76
(C) BOND FIND NO. 79, AFTER MACHINING TO THICKNESS, TO FIND NO. 78 USING 1006338 USE BONDING MATERIAL SPARINGLY
(D) BOND ASSY OF FIND NO. 78, 79 TO FIND NO. 76 USING 1006338 BOND IN CENTER AREA AND ON BOTH ENDS, FIND NO. 76 TO INTERFACE WITH FIND NO. 86
42. WHEN FIND NOS. 6, 34, 35, 37, OR 6 IS REMOVED AND REPLACED REPEAT NOTE 41
43. FIND NOS 81 THRU 84 TO BE USED AT ALL TIMES THREADED HOLES ARE NOT IN USE. THIS INCLUDES SHIPPING. ALL SCREWS SHALL BE TORQUED SUFFRICIENTLY TO SEAL THREADED HOLE. FIND NO. 84 TO BE TORQUED 7.0 TO 8.5 IN/LBS FIND NO. 81 TO BE TORQUED TO 10 TO 15 IN/LBS FIND NO. 83 TO BE TORQUED TO 2.5/3.5 IN/LBS. ALL HARDWARE NOT ASSEMBLED TO COMPUTER WHEN SHIPPED BUT REQUIRED SHALL BE IDENTIFIED PER ND1002019 & SHIPPED UNASSEMBLED
~~44. PRIOR TO INSTALLATION INTO SPACECRAFT, SEAL EXPOSED HARDWARE & CONNECTOR COMPOUND INTERFACE WITH .002 MIN THICK COATING OF FIND NO. 80. CONNECTOR ASSY SHIL SHALL NOT BE EXCEEDED. CURE AT ROOM TEMP FOR 24 HOURS~~
45. TORQUE FOR PLUG OF FIND NO. 56 SHALL BE 25-35 IN/LBS
46. WITH A PRESSURE DIFFERENTIAL OF 2.5 PSIG MAX IN THE COMPUTER, THE MAX DEFLECTION OF FIND NO. 3 (TRAY 'A' COVER) SHALL BE .125"
47. FOR AGC WIRE LIST FOR PARTICULAR CONFIGURATION, USE 2005094 AND THE APPLICABLE WIRING CHART FROM TRAY 'A' WIRED ASSEMBLY 2003092
UNLESS OTHERWISE SPECIFIED DIMENSIONS ARE IN INCHES CAPACITOR VALUES ARE IN µf RESISTOR VALUES ARE IN OHMS TOLERANCES ON FRACTIONS DECIMALS ANGLES ± ± ± DO NOT SCALE THIS DRAWING
MATERIAL
NEXT ASSY
USED ON
APPLICATION
LIST OF MATERIALS
MIT INSTRUMENTATION LAB CAMBRIDGE, MASS
MANNED SPACECRAFT CENTER HOUSTON, TEXAS
COMPUTER ASSEMBLY
CODE IDENT NO 80230
SIZE J
DRAWING NO 2003993
SCALE 1/1
SHEET 2 OF 2

CHART A SEE NOTES 36 & 37				
PART NO. FOR-0[illegible] (SEE NOTE 37)		PART NO. FOR-0[illegible]02A (SEE NOTE 37)		MODULES
2003121	-011	2003888	-011	LOGIC MODULE A1
	-021		-021	A2
	-031		-031	A3
	-041		-041	A4
	-051		-051	A5
	-061		-061	A6
	-071		-071	A7
	-081		-081	A8-A11
	-091		-091	A12
	-111		-111	A13
	-121		-121	A14
	-131		-131	A15
	-141		-141	A16
	-151		-151	A17
	-161		-161	A18
	-171		-171	A19
	-181		-181	A20
	-191		-191	A21
	-211		-211	A22
	-221		-221	A23
2003121	-231	2003888	-231	LOGIC MODULE A24

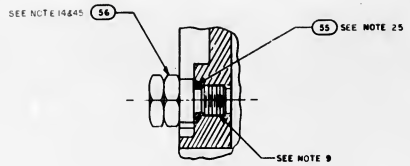

PARTIAL SECTION F F
SCALE: 2/1

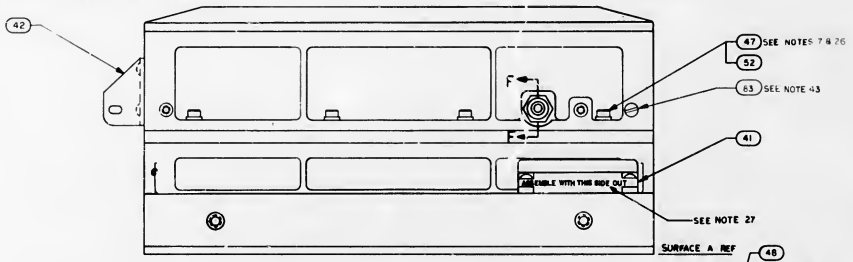

VIEW B-B

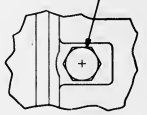

VIEW E-E

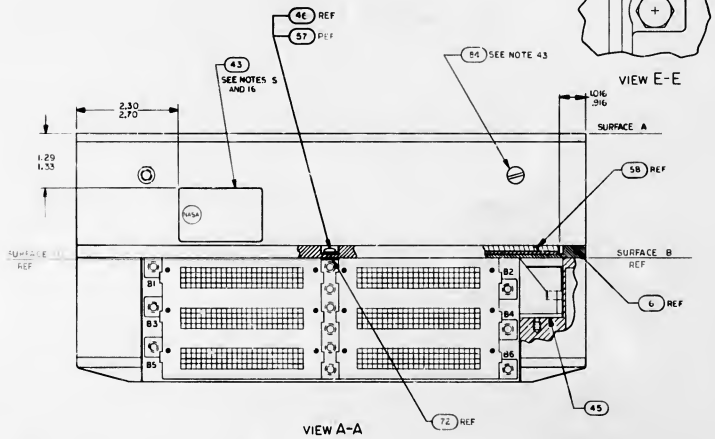

VIEW A-A

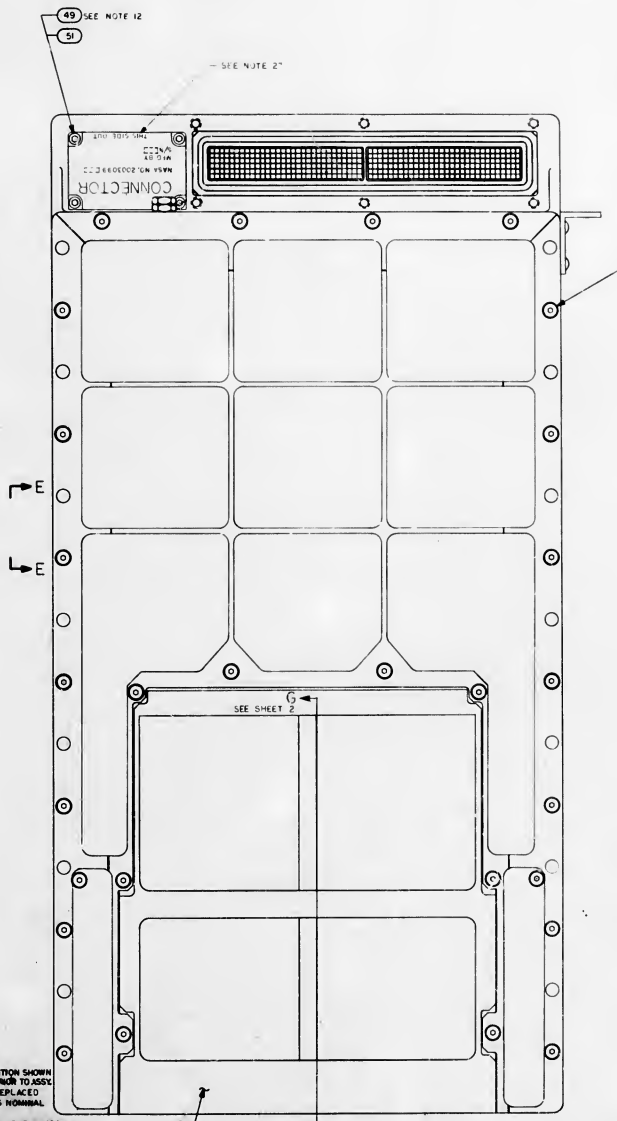

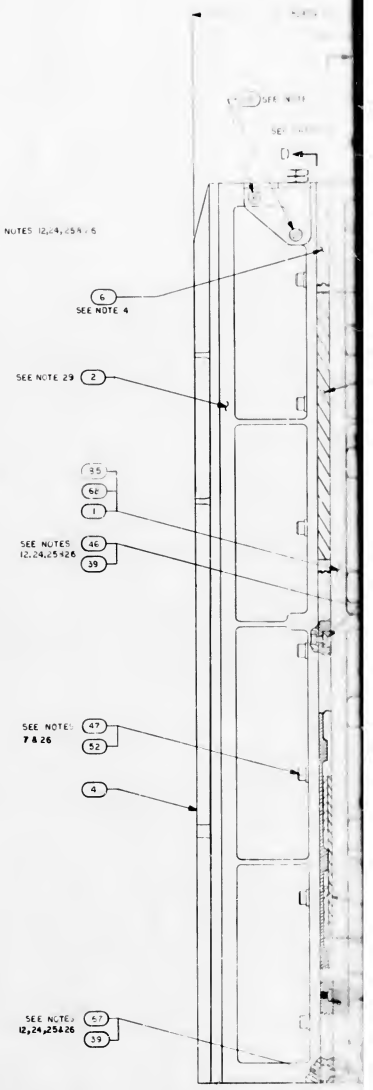

NOTES:

1. INTERPRET DRAWING IN ACCORDANCE WITH STANDARDS PRESCRIBED BY MIL-D-70327
2. PHANTOM LINES DENOTE AGC COLDPLATE AND HANDLING FIXTURE TO BE SUPPLIED BY NORTH AMERICAN AVIATION, INC
3. ADD SILICONE COMPOUND 1006879 TO MODULE MATING METAL SURFACES AND TRAY MATING SURFACES
4. ASSEMBLE FIND NO. 53 AND FIND NO. 63 TO FIND NO. 6 AND FIND NO. 6 TO FIND NO. 2 PRIOR TO ASSEMBLY OF FIND NO. 2 TO FIND NO. 1 OR FIND NO. 68 OR FIND NO. 85
5. BOND FIND NO. 43 TO FIND NO. 1 OR FIND NO. 68 OR FIND NO. 85 PER NO1002219, METHOD II
6. UNLESS OTHERWISE SPECIFIED TORQUE ALL MODULE MOUNTING SCREWS 15/19 INCH POUNDS
7. TORQUE FIND NO. 47 TO 28/32 INCH POUNDS
8. FINISH IS ~~REQUIRED TO SATISFY ICD GAEC-510-1000~~
9. APPLY SEALING COMPOUND MIL-S-22473 GRADE H TO FIND NO. 53, FIND NO. 56 AND FIND NO. 44
10. COMPLETED ASSEMBLY SHALL BE TESTED IN ACCORDANCE WITH AND SHALL MEET ALL REQUIREMENTS OF PS2006007 FOR-011 & PS2006003 FOR-081, -034 & -041 AND PS2016032 FOR-051 & -061
11. TORQUE FOR FIND NO. 36 AND FIND NO. 69 MOUNTING SCREWS TO BE 10/12 INCH POUNDS
12. TORQUE FOR FIND NO. 46, 49, 50 AND 67 TO BE 18/22 INCH POUNDS
13. TORQUE FOR FIND NO. 53 TO BE 4/6 INCH POUNDS
14. TORQUE FOR FIND NO. 44 AND FIND NO. 56 TO BE 137/157 INCH POUNDS
15. FIND NO. 40 SHALL BE SUPPLIED AS PART OF THIS ASSEMBLY
16. MARK COMPUTER ASSEMBLY AND RELATED PART NO., APPLICABLE DASH NO., SERIAL NO. AND CONTRACT NO. PER 1004260 AND SERIALIZE PER NO1002023
17. FINISH SURFACE [illegible] PER ICD NAA-NH01-01302-116. THIS ASSEMBLY MUST BE CAPABLE OF MEETING ELECTRICAL BONDING REQUIREMENTS OF ICD NAA-NH01-01302-116
18. BOND FIND NO. 58 TO FIND NO. 6 IN POSITION SHOWN USING 1006338 CURE AT ROOM TEMP 24 HRS PRIOR TO ASSY.
19. REFERENCED MODULES MUST NOT BE REPLACED OR INTERCHANGED WITHOUT REPEATING NOMINAL SELECTION PROCEDURE PER NOTE 10
20. THE VALUE OF C1 TO BE DETERMINED AT ELECTRICAL TEST AND SELECTED FROM APPROPRIATE CHART
21. WHEN THE VALUE OF C1 IS ZERO NO COMPONENT SHALL BE USED
22. ENCAPSULATE AREA SHOWN AFTER SELECTION AND INSTALLATION OF C1 USING NO1002009 METHOD C OR D. USING PRIMER PER SCD012543
23. WELD PER NO1002DC3
24. ASSEMBLE HARDWARE WITH SMOOTH FACE OF FIND NO. 39 IN CONTACT WITH SCREW HEAD
25. FIND NUMBER [illegible] ARE BE DISCARDED AND REPLACED WITH NEW PARTS EACH TIME THEY ARE DISASSEMBLED
26. ALL EXPOSED HARDWARE ASSEMBLIES WITH .002 MIN THICK COATING
27. STENCILING SHOWN FOR ORIENTATION ONLY
28. KEEP ALL MATING THREADS OF SCREWS, TRAY AND MID SPACER INSERTS FREE OF SILICONE COMPOUND
29. FILL FEMALE INSULATORS OF 841 AND 842 CONNECTORS USING FIND NO. 70 PRIOR TO ASSEMBLY OF FIND NO. 5 TO FIND NO. 2
30. FIND NO. 12 ERASEABLE MEMORY, SENSE AMPLIFIER MODULE USE EITHER 2003391-011 OR 2003391-031
31. FIND NO. 62 FIXED MEMORY, SENSE AMPLIFIER MODULE USE EITHER 2003391-021 OR 2003391-041
32. BEVEL FIND NO. 2 MOUNTING EDGES 1L FIND NO. 5 PER NO1[illegible] TYPE 2 [illegible] 1L ASSEMBLY OF FIND NO. 5
33. SEE SHEET 2
34. SEE SHEET 2
35. SEE SHEET 2
36. SEE SHEET 2
37. SEE SHEET 2
38. SEE SHEET 2
39. SEE SHEET 2
40. SEE SHEET 2
41. SEE SHEET 2
42. SEE SHEET 2
43. [illegible]
44. [illegible]
45. [illegible]
47. SEE SHEET 2

2003993 | 5

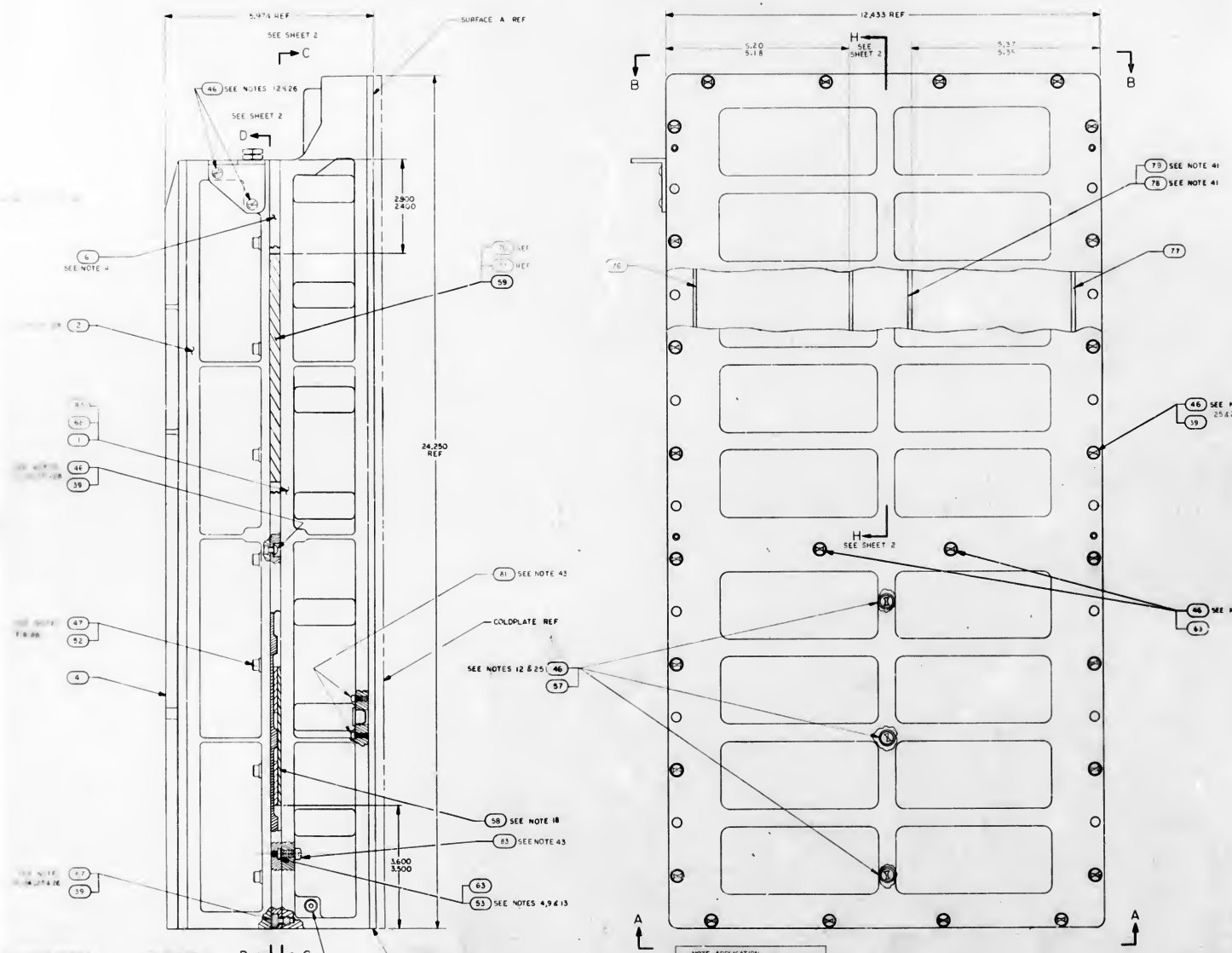

NOTE APPLICATION	
DASH NO.	NOTES APPLICABLE
-011	1 THRU 34, 37, 43, 45, 46
-021	1 THRU 35, 37, 43, 45, 46
-031	1 THRU 34, 36 & 39 THRU 46
-041	1 THRU 35, 37 & 39 THRU 46
-051	1 THRU 35, 37 & 39 THRU 46
-061	1 THRU 34, 36 & 37 THRU 46

REVISIONS				
BTR	ZONE	DESCRIPTION	BY	DATE
G		REVISED PER TDRR 34265		
N		REVISED PER TDRR 36061		
R		REVISED PER TDRR 36622		
S		REVISED PER TDRR 36288		

QTY/QTY RECEIVED							QTY REQD	PART OR IDENTIFYING NO	NOMENCLATURE OR DESCRIPTION	FIND NO
								2003953-041	ALARM MODULE B9	
1	1	1	—							
1	1	1	1	1	1	1	2	2003111-051	ERASABLE MEMORY MODULE B12	86
—	—	—	1	—	—	1		2003092-091	TRAY "A" WIRED ASSY	85
4	4	4	4	4	4	4		KK0485-432	SCREW, NYLON	84
11	11	11	11	11	11	11		KK0485-332	SCREW, NYLON	83
6	6	6	6	6	6	6		KK0485-235	SCREW, NYLON	82
25	25	25	25	25	25	25		KK0485-100	SCREW, NYLON	81
AR	AR	AR	AR	AR	AR	AR		1006338-003	SEALING COMPOUND, SILICONE RUBBER	80
1	1	1	—	—	—	—		2004691	SHIM VIBRATION DAMPENING	79
1	1	1	—	—	—	—		2004690	PAD VIBRATION DAMPENING	78
1	1	1	1	—	—	—		2004899-007	PAD VIBRATION	77
1	1	1	1	—	—	—		2004899-006	PAD VIBRATION	76
AR			AR	—	—	—		2004899-002	SHIM AGC	75
AR			AR	—	—	—		2004899-001	SHIM AGC	74
—	—	—	—	—	—	—		2003092-041	TRAY "A" WIRED ASSY	73
AR	AR	AR	AR	AR	AR	AR		2010801	SHIM AGC	72
AR	AR	AR	AR	AR	AR	AR		2010800-000	SHIM	71
								SEE NOTE 47	AGC WIRE LIST	REF
AR	AR	AR	AR	AR	AR	AR		1008954	SILICONE COMPOUND	70
2	2	2	2	2	—	—		2003882-011	POWER SUPPLY MODULE A30-31	69
—	—	1	—	1	—	—		SEE NOTE 38	TRAY "A" WIRED ASSY	68
33	33	33	33	33	33	33		2004732-002	SCREW, COATED	67
AR			AR	AR	AR	AR		1006338-003	SEALING COMPOUND, SILICONE RUBBER	66
AR	AR	AR	AR	AR	AR	AR		1006774-22	INSULATION, SLEEVING ELECTRICAL	65
1	1	1	1	1	1	1		SEE NOTE 20	CAPACITOR	64
10	10	10	10	10	10	10		2004148-007	WASHER, FLAT	63
1	1	1	1	—	—	—		SEE NOTE 31	SENSE AMPLIFIER MODULE, FIXED MEMORY B14	62
			AR					2004895-002	SHIM AGC	61
			AR					2004895-001	SHIM AGC	60
—	—	—	—	1	1	1		2004899-001	PAD VIBRATION	59
—	—	—	1	1	1	1		2003970	VIBRATION PAD ASSY	58
4	4	4	4	4	4	4		NAS1598-008N	WASHER, SEALING	57
—	—	—	1	1	1	1		2418773	VALVE, PRESSURE ASSEMBLY	56
1	1	1	1	1	1	1		1000159-5	PACKING, PREFORMED "O" RING	55
2	2	2	2	2	2	2		2004964-001	WASHER, FLAT	54
8	8	8	8	8	8	8		2004130	PAD, THREADED	53
18	18	18	18	18	18	18		2004894-014	WASHER, FLAT	52
4	4	4	4	4	4	4		2004894-012	WASHER, FLAT	51
2	2	2	2	2	2	2		1004489-36	SCREW, HEX SOCKET HEAD	50
4	4	4	4	4	4	4		1004722-2	SCREW, CAPTIVE	49
1	1	1	1	1	1	1		1000159-7	PACKING, PREFORMED "O" RING	48
18	18	18	18	18	18	18		2004732-003	SCREW, COATED	47
33	33	33	33	33	33	33		2004732-001	SCREW, COATED	46
2	2	2	2	2	2	2		1006347	GASKET, PLATE	45
1	1	1	1	1	1	1		2004986	PLUG, MACHINE THREAD	44
1	1	1	1	1	1	1		1004260-19	NAME PLATE, TYPE 3	43
1	1	1	1	1	1	1		2004113-001	BRACKET, CABLE	42
1	1	1	1	1	1	1		2005099-011	CONNECTOR ASSEMBLY	41
1	1	1	1	1	1	1		1006380	BASKET, RETAINED	40
58	58	58	58	58	58	58		2004717	WASHER, KNURLED	39
3	3	3	3	3	3	3		2003067-041	INTERFACE MODULE A27-29	38
2	2	2	2	2	2	2		2003070-031	INTERFACE MODULE A25-26	37
—	—	—	—	—	2	2		2003887-011	POWER SUPPLY MODULE A30-31	36
1	1	1	1	1	1	1		SEE NOTES 36 & 37	LOGIC MODULE A24	35
1	1	1	1	1	1	1			LOGIC MODULE A23	34
1	1	1	1	1	1	1			LOGIC MODULE A22	33
1	1	1	1	1	1	1			LOGIC MODULE A21	32
1	1	1	1	1	1	1			LOGIC MODULE A20	31
1	1	1	1	1	1	1			LOGIC MODULE A19	30
1	1	1	1	1	1	1			LOGIC MODULE A18	29
1	1	1	1	1	1	1			LOGIC MODULE A17	28
1	1	1	1	1	1	1			LOGIC MODULE A16	27
1	1	1	1	1	1	1			LOGIC MODULE A15	26
1	1	1	1	1	1	1			LOGIC MODULE A14	25
1	1	1	1	1	1	1			LOGIC MODULE A13	24
1	1	1	1	1	1	1			LOGIC MODULE A12	23
4	4		4	4	4				LOGIC MODULE A8-11	22
1	1	1	1	1	1	1			LOGIC MODULE A7	21
1	1	1	1	1	1	1			LOGIC MODULE A6	20
1	1	1	1	1	1	1			LOGIC MODULE A5	19
1	1	1	1	1	1	1			LOGIC MODULE A4	18
1	1	1	1	1	1	1			LOGIC MODULE A3	17
1	1	1	1	1	1	1			LOGIC MODULE A2	16
1	1	1	1	1	1	1		SEE NOTES 36 & 37	LOGIC MODULE A1	15
2	2	2	2	2	2	2		2003140-031	ROPE DRIVER MODULE B6-7	14
1	1	1	1	1	1	1		2003032-031	STRAND SELECT MODULE B15	13
1	1	1	1	1	1	1		SEE NOTE 30	SENSE AMPL MOD, ERASABLE MEMORY B13	12
1	1	1	1	1	1	1		2003112-[illegible]	ERASABLE MEMORY MODULE B12	11
1	1	1	1	1	1	1		2003028-031	CURRENT SWITCH MODULE B11	10
2	2	2	2	2	2	2		2003118-021	ERASABLE DRIVER MODULE B9-10	9
—	—	—	—	—	—	—		2003963-021	ALARM MODULE B8	8
1	1	1	1	1	1	1		2003036-031	OSCILLATOR MODULE B7	7
1	1	1	1	1	1	1		2003978-001	MID SPACER	6
1	1	1	1	1	1	1		2003059-021	INTERCONNECTION HEADER ASSEMBLY	5
1	1	1	1	1	1	1		2003976-011	TRAY B COVER	4
1	1	1	1	1	1	1		2003977-011	TRAY A COVER	3
1	1	1	1	1	1	1		2003093-021	TRAY B WIRED ASSEMBLY	2
—	—	—	1	—	1	—		2003092-031	TRAY A WIRED ASSEMBLY	1

LIST OF MATERIALS

UNLESS OTHERWISE SPECIFIED DIMENSIONS ARE IN INCHES. CAPACITOR VALUES ARE IN µf. RESISTOR VALUES ARE IN OHMS. TOLERANCES ON FRACTIONS ± DECIMALS ± ANGLES ± DO NOT SCALE THIS DRAWING

MATERIAL —

2003991 NEXT ASSY — USED ON APPLICATION

MIT INSTRUMENTATION LAB CAMBRIDGE MASS

MANNED SPACECRAFT CENTER HOUSTON TEXAS

COMPUTER ASSEMBLY

CODE IDENT NO 80230 SIZE J DRAWING NO 2003993 SHEET 1 OF 2

SCALE 1

CHART A SEE NOTES 36 & 37				
PART NO. FOR -01		PART NO. FOR -01 OR -03		MODULES
2003121	-011	2003888	-011	LOGIC MODULE A1
↓	-021	↓	-021	↓ A2
	-031		-031	A3
	-041		-041	A4
	-051		-051	A5
	-061		-061	A6
	-071		-071	A7
	-081		-081	A8-A11
	-091		-091	A12
	-111		-111	A13
	-121		-121	A14
	-131		-131	A15
	-141		-141	A16
	-151		-151	A17
	-161		-161	A18
	-171		-171	A19
	-181		-181	A20
	-191		-191	A21
	-211		-211	A22
↑	-221	↑	-221	↑ A23
2003121	-231	2003888	-231	LOGIC MODULE A24

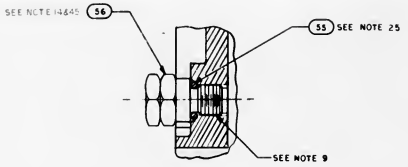

PARTIAL SECTION F F
SCALE: 2/1

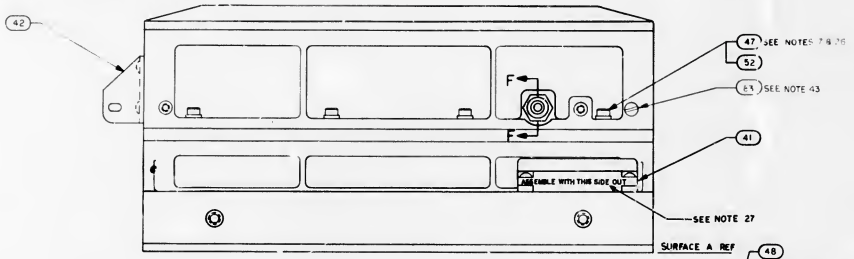

VIEW B-B

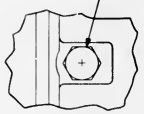

VIEW E-E

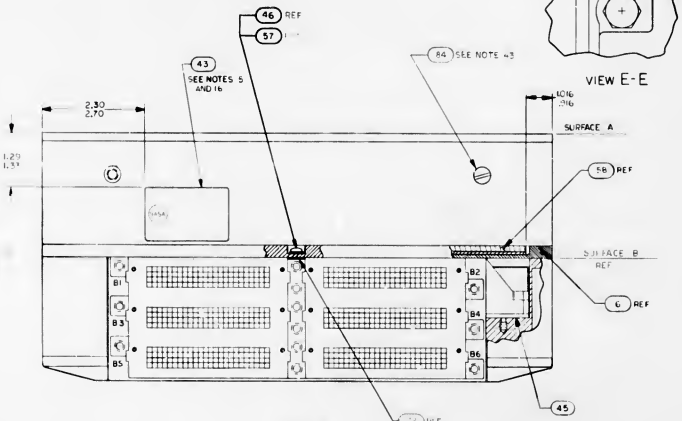

VIEW A-A

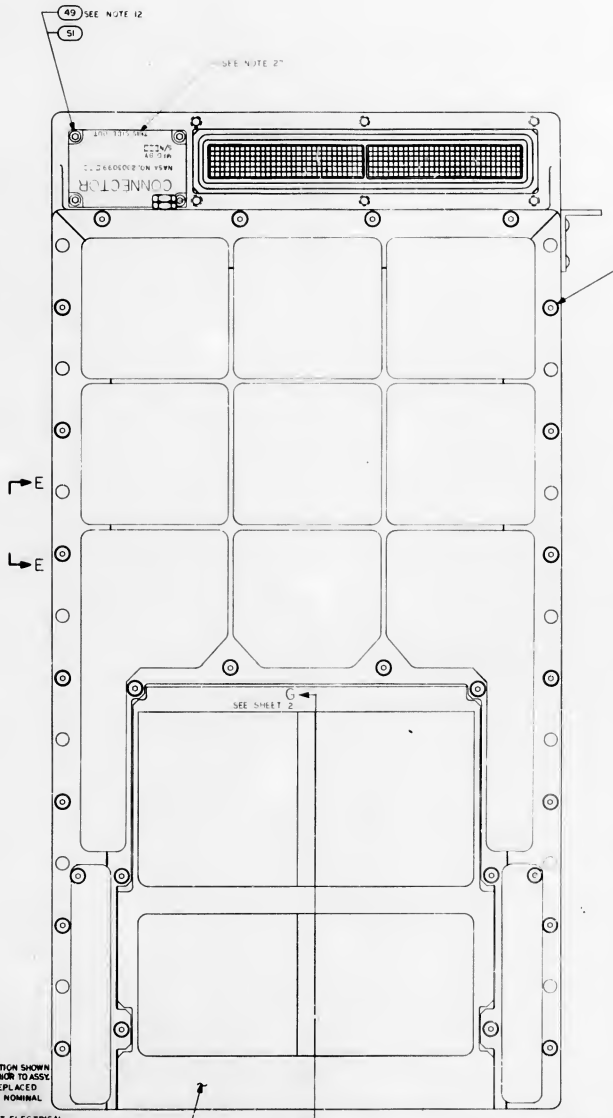

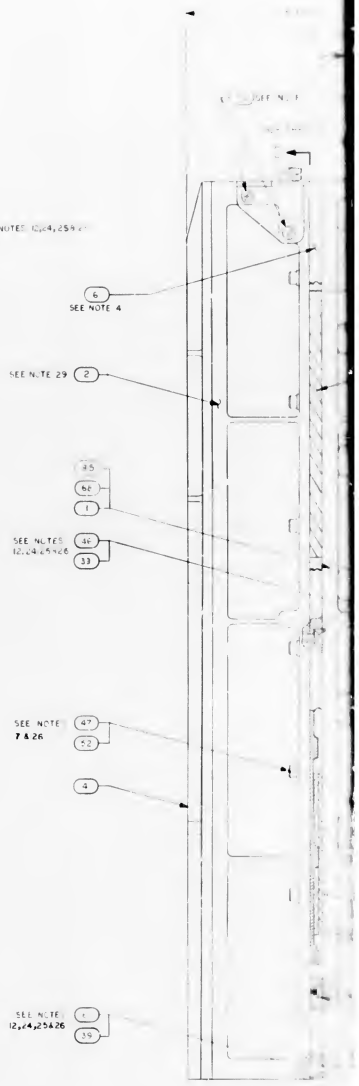

NOTES:

1. INTERPRET DRAWING IN ACCORDANCE WITH STANDARDS PRESCRIBED BY MIL-D-70327
2. PHANTOM LINES DENOTE AGC COLOPLATE AND HANDLING FIXTURE TO BE SUPPLIED BY NORTH AMERICAN AVIATION, INC
3. ADD SILICONE COMPOUND 1006879 TO MODULE MATING METAL SURFACES AND TRAY MATING SURFACES
4. ASSEMBLE FIND NO. 53 AND FIND NO. 63 TO FIND NO. 6 AND FIND NO. 6 TO FIND NO. 2 PRIOR TO ASSEMBLY OF FIND NO. 2 TO FIND NO. 1 OR FIND NO. 68 OR FIND NO. 95
5. BOND FIND NO. 43 TO FIND NO. 1 OR FIND NO. 68 OR FIND NO. 95 PER NDI0021, [illegible]
6. UNLESS OTHERWISE SPECIFIED TORQUE ALL MODULE MOUNTING SCREWS 15/19 INCH POUNDS
7. TORQUE FIND NO. 47 TO 28/32 INCH POUNDS
8. FINISH IS REQUIRED TO SATISFY ICD GAEC-510-10001
9. APPLY SEALING COMPOUND MIL-S-22473 GRADE H TO FIND NO. 53, FIND NO. 56 AND FIND NO. 44
10. COMPLETED ASSEMBLY SHALL BE TESTED IN ACCORDANCE WITH AND SHALL MEET ALL REQUIREMENTS OF PS2016007 FOR -011 & PS2016033 FOR -021, -031 & -041 AND PS2016032 FOR -051 & -061
11. TORQUE FOR FIND NO. 36 AND FIND NO. 69 MOUNTING SCREWS TO BE 10/12 INCH POUNDS
12. TORQUE FOR FIND NO. 46, 49, 50 AND 67 TO BE 18/22 INCH POUNDS
13. TORQUE FOR FIND NO. 53 TO BE 4/6 INCH POUNDS
14. TORQUE FOR FIND NO. 44 AND FIND NO. 56 TO BE 137/157 INCH POUNDS
15. FIND NO. 40 SHALL BE SUPPLIED AS PART OF THIS ASSEMBLY
16. MARK COMPUTER ASSEMBLY AND RELATED PART NO., APPLICABLE DASH NO., SERIAL NO. AND CONTRACT NO. PER 1004260 AND SERIALIZE PER NO 1002023
17. FINISH SURFACE [illegible] PER ICD NAA MHO1-01302-116 THIS ASSEMBLY MUST BE CAPABLE OF MEETING ELECTRICAL BONDING REQUIREMENTS OF ICD NAA MHO1-01302-116
18. BOND FIND NO. 58 TO FIND NO. 6 IN POSITION SHOWN USING 1006338 CURE AT ROOM TEMP 24 HRS PRIOR TO ASSY.
19. REFERENCED MODULES MUST NOT BE REPLACED OR INTERCHANGED WITHOUT REPEATING NOMINAL SELECTION PROCEDURE PER NOTE 10
20. THE VALUE OF C1 TO BE DETERMINED AT ELECTRICAL TEST AND SELECTED FROM APPROPRIATE CHART
21. WHEN THE VALUE OF C1 IS ZERO NO COMPONENT SHALL BE USED
22. ENCAPSULATE AREA SHOWN AFTER SELECTION AND INSTALLATION OF C1 USING ND1002009 METHOD C OR D USING PRIMER PER SCD1012513
23. WELD PER ND1002005
24. ASSEMBLE HARDWARE WITH SMOOTH FACE OF FIND NO. 39 IN CONTACT WITH SCREW HEAD
25. FIND NO. 36, 48, 56 & 57 TO BE DISCARDED AND REPLACED WITH NEW PARTS EACH TIME THEY ARE DISASSEMBLED
26. SEAL EXPOSED HARDWARE ASSEMBLIES WITH .002 MIN THICK COATING OF FIND NO. 90. OVERALL COMPUTER ASSEMBLY DIMENSIONS SHALL NOT BE EXCEEDED. CURE AT ROOM TEMP 24 HRS
27. STENCILING SHOWN FOR ORIENTATION ONLY
28. KEEP ALL MATING THREADS OF SCREWS, TRAY AND MID SPACER INSERTS FREE OF SILICONE COMPOUND
29. FILL FEMALE INSULATORS OF B41 AND B42 ASSY [illegible] USING FIND NO. 70 PRIOR TO ASSEMBLY [illegible] FIND NO. 42

31. [illegible] SEE SHEET 2
33. SEE SHEET 2
34. SEE SHEET 2
35. SEE SHEET 2
36. SEE SHEET 2
37. SEE SHEET 2
38. SEE SHEET 2
39. SEE SHEET 2
40. SEE SHEET 2
41. SEE SHEET 2
42. SEE SHEET 2
47. SEE SHEET 2

2003993

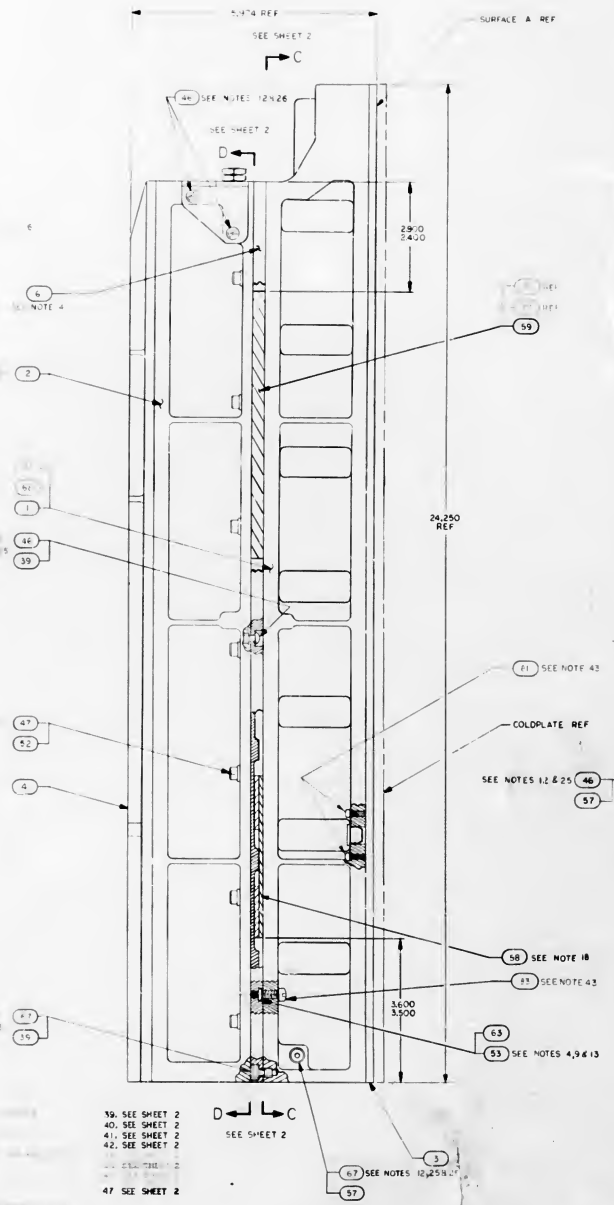

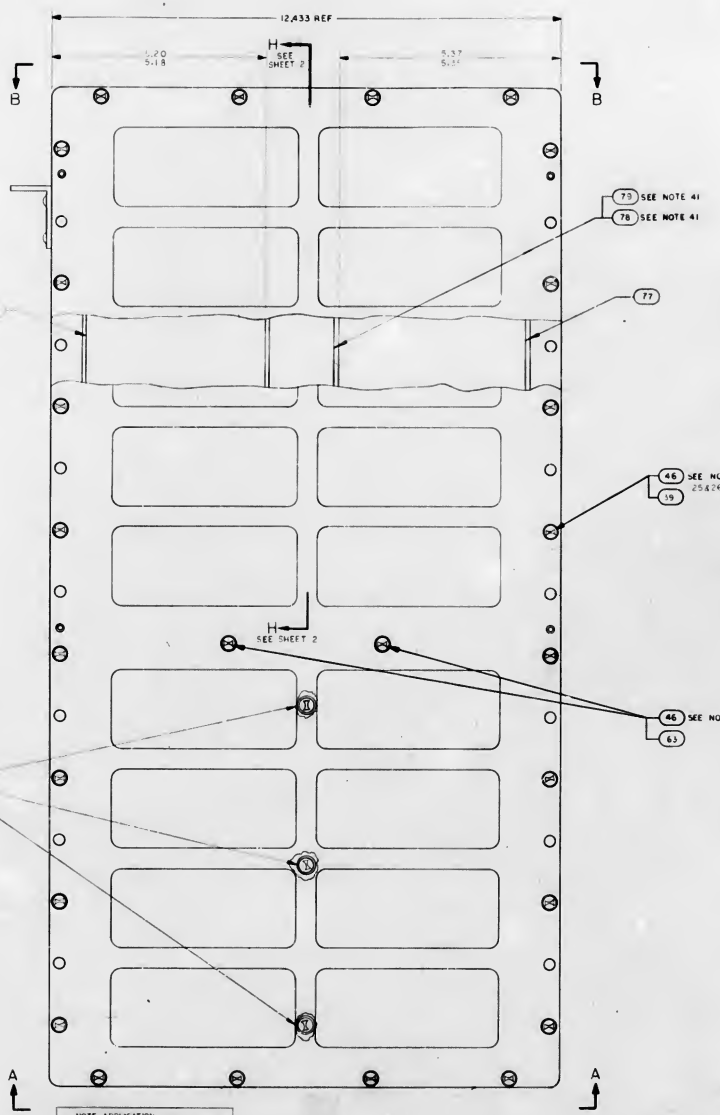

NOTE APPLICATION	
DASH NO.	NOTES APPLICABLE
-011	1 THRU 34, 37, 43, 45, 46
-021	1 THRU 15, 27, 43, 45, 46
-031	1 THRU 34, 36 & 39 THRU 46
-041	1 THRU 33, 36, 37 & 39 THRU 46
-051	1 THRU 35, 37 & 39 THRU 46
-061	1 THRU 34, 36 & 39 THRU 46

REVISIONS

SYM	ZONE	DESCRIPTION	DR	CHK	DATE	APPROVED
G		REVISED PER TDRR 34265	S.A.			
N		REVISED PER TDRR 36016				
R		REVISED PER				
S		REVISED PER				

QTY/ASSY					QTY REQD	DWG NO	PART OR IDENTIFYING NO	NOMENCLATURE OR DESCRIPTION	FIND NO
							2003993-011	ALARM MODULE A	
1	1	1	—	—	1		2003111-051	ERASABLE MEMORY MODULE B12	86
1	1	—	—	—	1		2005092-091	TRAY "N" WIRED ASSY	85
1	4	4	4	4	4		1010485-432	SCREW, NYLON	84
11	11	11	11	11	11		1010485-332	SCREW, NYLON	83
5	5	5	6	6	6		1010485-235	SCREW, NYLON	82
28	25	28	28	28	28		1010485-100	SCREW, NYLON	81
AR	AR	AR	AR	AR	AR		1005338-003	SEALING COMPOUND, SILICONE RUBBER	80
		1	—	—			2004691	SHIM VIBRATION DAMPENING	79
1	1	1	—	—			2004690	PAD VIBRATION DAMPENING	78
1	1	1	—	—			2004899-007	PAD VIBRATION	77
1	1	1	—	—			2004899-006	PAD VIBRATION	76
AR		AR	—				2004888-002	SHIM AGC	75
AR		AR	—				2004888-001	SHIM AGC	74
1	—	1	—	—			2005092-041	TRAY "N" WIRED ASSY	73
AR	AR	AR	AR	AR	AR		2010801	SHIM AGC	72
AR	AR	AR	AR	AR	AR		2010800-000	SHIM	71
							SEE NOTE 47	AGC WIRE LIST	REF
AR	AR	AR	AR	AR	AR		1008954	SILICONE COMPOUND	70
2	2	2	2	2	—		2003982-011	POWER SUPPLY MODULE A30-31	69
—	1	—	—	—	—		SEE NOTE 28	TRAY "A" WIRED ASSY	68
33	33	33	33	33	33		2004732-002	SCREW, COATED	67
AR		AR	AR	AR	AR		1005338-003	SEALING COMPOUND, SILICONE RUBBER	66
AR	AR	AR	AR	AR	AR		1008778-22	INSULATION, SLEEVING ELECTRICAL	65
1	1	1		1	1		SEE NOTE 20	CAPACITOR	64
10	10	10	10	10	10		2004148-007	WASHER, FLAT	63
1	1	1		1	1		SEE NOTE 31	SENSE AMPLIFER MODULE, FIXED MEMORY B14	62
			AR	AR	AR		2004888-002	SHIM AGC	61
			AR	AR	AR		2004888-001	SHIM AGC	60
	—	—	1	1	1		2004899-001	PAD VIBRATION	59
		1	1	1	1		2005970	VIBRATION PAD ASSY	58
4	4	4	4	4	4		NAS559-008N	WASHER, SEALING	57
1	1		1	1	1		2018773	VALVE PRESSURE ASSEMBLY	56
1	1		1	1	1		1000159-5	PACKING, PREFORMED "O" RING	55
2	2	2	2	2	2		2004964-001	WASHER, FLAT	54
3	3		8	8	8		2004133	PAD, THREADED	53
18	18	18	18	18	18		2004894-014	WASHER, FLAT	52
4	4	4	4	4	4		2004894-012	WASHER, FLAT	51
2	2	2	2	2	2		NAS499-36	SCREW, HEX SOCKET HEAD	50
4	4	4	4	4	4		1004722-2	SCREW, CAPTIVE	49
1	1	1	1	1	1		1000159-7	PACKING, PREFORMED "O" RING	48
18	18	18	18	18	18		2004732-003	SCREW, COATED	47
33	33	33	33	33	33		2004732-011	SCREW, COATED	46
2	2		2	2	2		1006347	GASKET, PLATE	45
1	1		1	1	1		2004986	PLUG, MACHINE THREAD	44
1	1		1	1	1		1004260-19	NAME PLATE, TYPE I	43
1	1		1	1	1		2004113-001	BRACKET, CABLE	42
1	1		1	1	1		2005699-011	CONNECTOR ASSEMBLY	41
1	1		1	1	1		1006380	GASKET, RETAINED	40
58	58	58	58	58	58		2004717	WASHER, KNURLED	39
3	3	3	3	3	3		2003067-041	INTERFACE MODULE A27-29	38
2	2	2	2	2	2		2003070-031	INTERFACE MODULE A25-26	37
—	—	—	—	—	2		2003887-011	POWER SUPPLY MODULE A30-31	36
1	1	1	1	1	1		SEE NOTES 36 & 37	LOGIC MODULE A24	35
1	1	1	1	1	1			LOGIC MODULE A23	34
1	1	1	1	1	1			LOGIC MODULE A22	33
1	1	1	1	1	1			LOGIC MODULE A21	32
1	1	1	1	1	1			LOGIC MODULE A20	31
1	1	1	1	1	1			LOGIC MODULE A19	30
1	1	1	1	1	1			LOGIC MODULE A18	29
1	1	1	1	1	1			LOGIC MODULE A17	28
1	1	1	1	1	1			LOGIC MODULE A16	27
1	1	1	1	1	1			LOGIC MODULE A15	26
1	1	1	1	1	1			LOGIC MODULE A14	25
1	1	1	1	1	1			LOGIC MODULE A13	24
1	1	1	1	1	1			LOGIC MODULE A12	23
4	4	4	4	4	4			LOGIC MODULE A8-11	22
1	1	1	1	1	1			LOGIC MODULE A7	21
1	1	1	1	1	1			LOGIC MODULE A6	20
1	1	1	1	1	1			LOGIC MODULE A5	19
1	1	1	1	1	1			LOGIC MODULE A4	18
1	1	1	1	1	1			LOGIC MODULE A3	17
1	1	1	1	1	1			LOGIC MODULE A2	16
1	1	1	1	1	1		SEE NOTES 36 & 37	LOGIC MODULE A1	15
2	2	2	2	2	2		2003140-031	WIRE DRIVER MODULE B16-17	14
1	1	1	1	1	1		2003027-031	STRAND SELECT MODULE B15	13
1	1	1	1	1	1		SEE NOTE 30	SENSE AMPLIFIER, ERASABLE MEMORY B13	12
1	1	1	1	1	1		2003110-041	ERASABLE MEMORY MODULE B12	11
1	1	1	1	1	1		2005026-031	CURRENT SWITCH MODULE B11	10
2	2	2	2	2	2		2003114-021	ERASABLE DRIVER MODULE B9-10	9
—	—	—	—	—	1		2003983-021	ALARM MODULE B8	8
1	1	1	1	1	1		2005036-031	OSCILLATOR MODULE B7	7
1	1	1	1	1	1		2003978-001	MID SPACER	6
1	1	1	1	1	1		2003059-021	INTERCONNECTION HEADER ASSEMBLY	5
1	1	1	1	1	1		2003976-011	TRAY B COVER	4
1	1	1	1	1	1		2003977-011	TRAY A COVER	3
1	1	1	1	1	1		2003093-021	TRAY B WIRED ASSEMBLY	2
—	—	—	1	1	1		2003092-031	TRAY A WIRED ASSEMBLY	1

LIST OF MATERIALS

2003993	NEXT ASSY	USED ON
	APPLICATION	

UNLESS OTHERWISE SPECIFIED DIMENSIONS ARE IN INCHES CAPACITOR VALUES ARE IN µf RESISTOR VALUES ARE IN OHMS TOLERANCES ON FRACTIONS ± DECIMALS ± ANGLES ± DO NOT SCALE THIS DRAWING MATERIAL

MIT INSTRUMENTATION LAB CAMBRIDGE MASS

DRAWN
CHECKED
APPROVED
APPROVED
APPROVED MFG
APPROVED QC

MANNED SPACECRAFT CENTER HOUSTON TEXAS

COMPUTER ASSEMBLY

CODE IDENT NO 80230 | SIZE J | DRAWING NO 2003993

SCALE | SHEET 1 OF 2

SH1/2 2003993 IE2/2

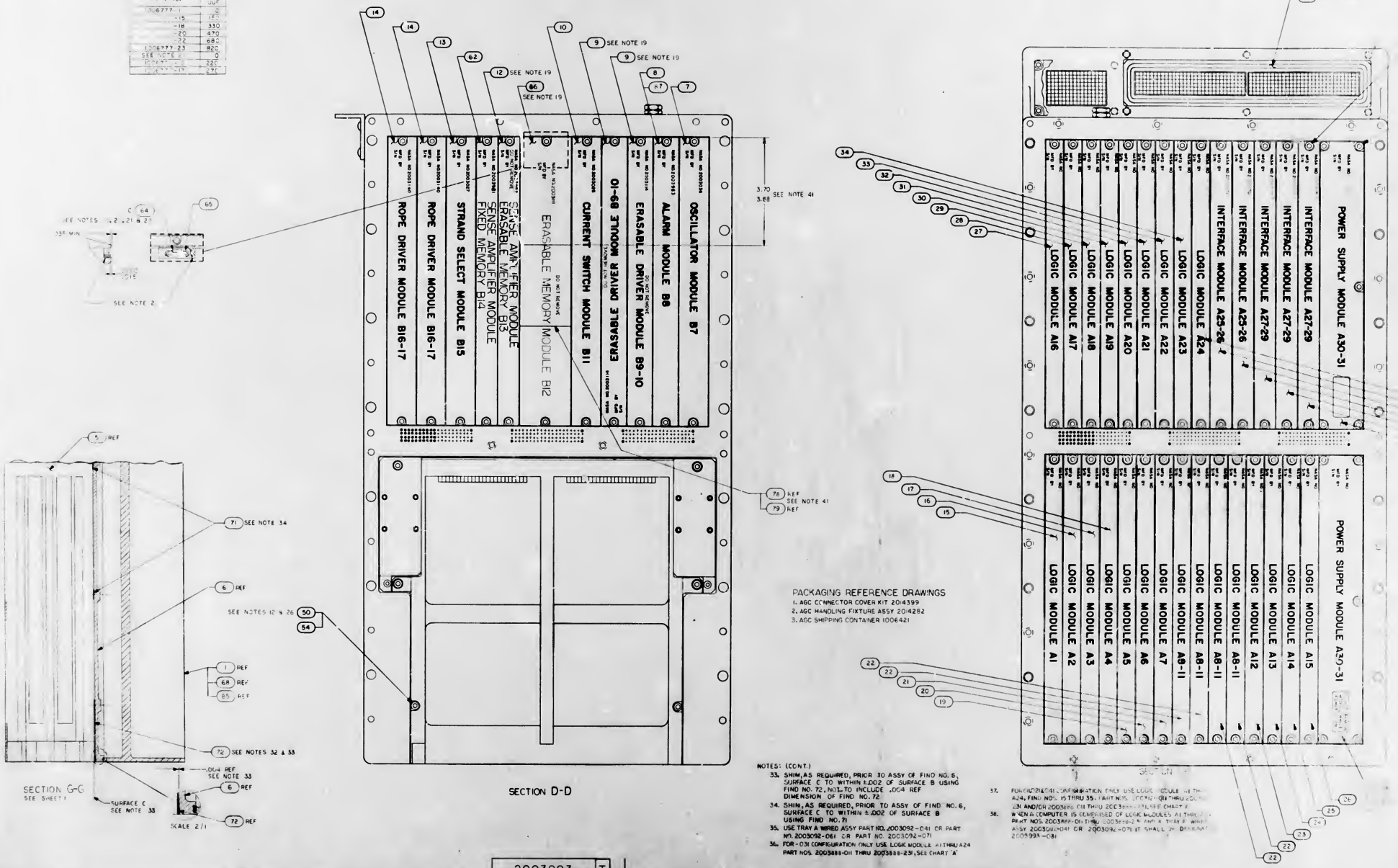
C1
PART NO.
VALUE UUF
1006777-15 180
-18 330
-20 470
-22 680
1006777-23 820
SEE NOTE 21 0
1006777-25 220
1006777-27 270
SEE NOTES 12, 21 & 23
.338 MIN
SEE NOTE 2
SECTION G-G
SEE SHEET 1
SURFACE C
SEE NOTE 33
SCALE 2/1
SEE NOTES 12 & 26
SEE NOTES 32 & 33
.004 REF
SEE NOTE 33
SEE NOTE 34
SEE NOTE 19
SEE NOTE 41
3.70
3.68
ROPE DRIVER MODULE B16-17
ROPE DRIVER MODULE B16-17
STRAND SELECT MODULE B15
SENSE AMPLIFIER MODULE
ERASABLE MEMORY B13
SENSE AMPLIFIER MODULE
FIXED MEMORY B14
ERASABLE MEMORY MODULE B12
DO NOT REMOVE
CURRENT SWITCH MODULE B11
ERASABLE DRIVER MODULE B9-10
ERASABLE DRIVER MODULE B9-10
ALARM MODULE B8
OSCILLATOR MODULE B7
SECTION D-D
PACKAGING REFERENCE DRAWINGS
1. AGC CONNECTOR COVER KIT 2014399
2. AGC HANDLING FIXTURE ASSY 2014282
3. AGC SHIPPING CONTAINER 1006421
LOGIC MODULE A16
LOGIC MODULE A17
LOGIC MODULE A18
LOGIC MODULE A19
LOGIC MODULE A20
LOGIC MODULE A21
LOGIC MODULE A22
LOGIC MODULE A23
LOGIC MODULE A24
INTERFACE MODULE A25-26
INTERFACE MODULE A25-26
INTERFACE MODULE A27-29
INTERFACE MODULE A27-29
INTERFACE MODULE A27-29
POWER SUPPLY MODULE A30-31
LOGIC MODULE A1
LOGIC MODULE A2
LOGIC MODULE A3
LOGIC MODULE A4
LOGIC MODULE A5
LOGIC MODULE A6
LOGIC MODULE A7
LOGIC MODULE A8-11
LOGIC MODULE A8-11
LOGIC MODULE A8-11
LOGIC MODULE A8-11
LOGIC MODULE A12
LOGIC MODULE A13
LOGIC MODULE A14
LOGIC MODULE A15
POWER SUPPLY MODULE A30-31
SECTION E-E
NOTES: (CONT.)
33. SHIM, AS REQUIRED, PRIOR TO ASSY OF FIND NO. 6, SURFACE C TO WITHIN ±.002 OF SURFACE B USING FIND NO. 72, NOT TO INCLUDE .004 REF DIMENSION OF FIND NO. 72
34. SHIM, AS REQUIRED, PRIOR TO ASSY OF FIND NO. 6, SURFACE C TO WITHIN ±.002 OF SURFACE B USING FIND NO. 71
35. USE TRAY A WIRED ASSY PART NO. 2003092-041 OR PART NOS. 2003092-061 OR PART NO. 2003092-071
36. FOR -031 CONFIGURATION ONLY USE LOGIC MODULE A1 THRU A24 PART NOS. 2003888-011 THRU 2003888-231, SEE CHART 'A'
37. FOR -021 & -041 CONFIGURATION ONLY USE LOGIC MODULE A1 THRU A24, FIND NOS. 15 THRU 35. PART NOS. 2003888-011 THRU 2003888-231 AND/OR 2003888-011 THRU 2003888-231, SEE CHART 'A'
38. WHEN A COMPUTER IS COMPRISED OF LOGIC MODULES A1 THRU A24 PART NOS. 2003888-011 THRU 2003888-241 AND A TRAY A WIRED ASSY 2003092-041 OR 2003092-071 IT SHALL BE DESIGNATED 2003993-081
2003993

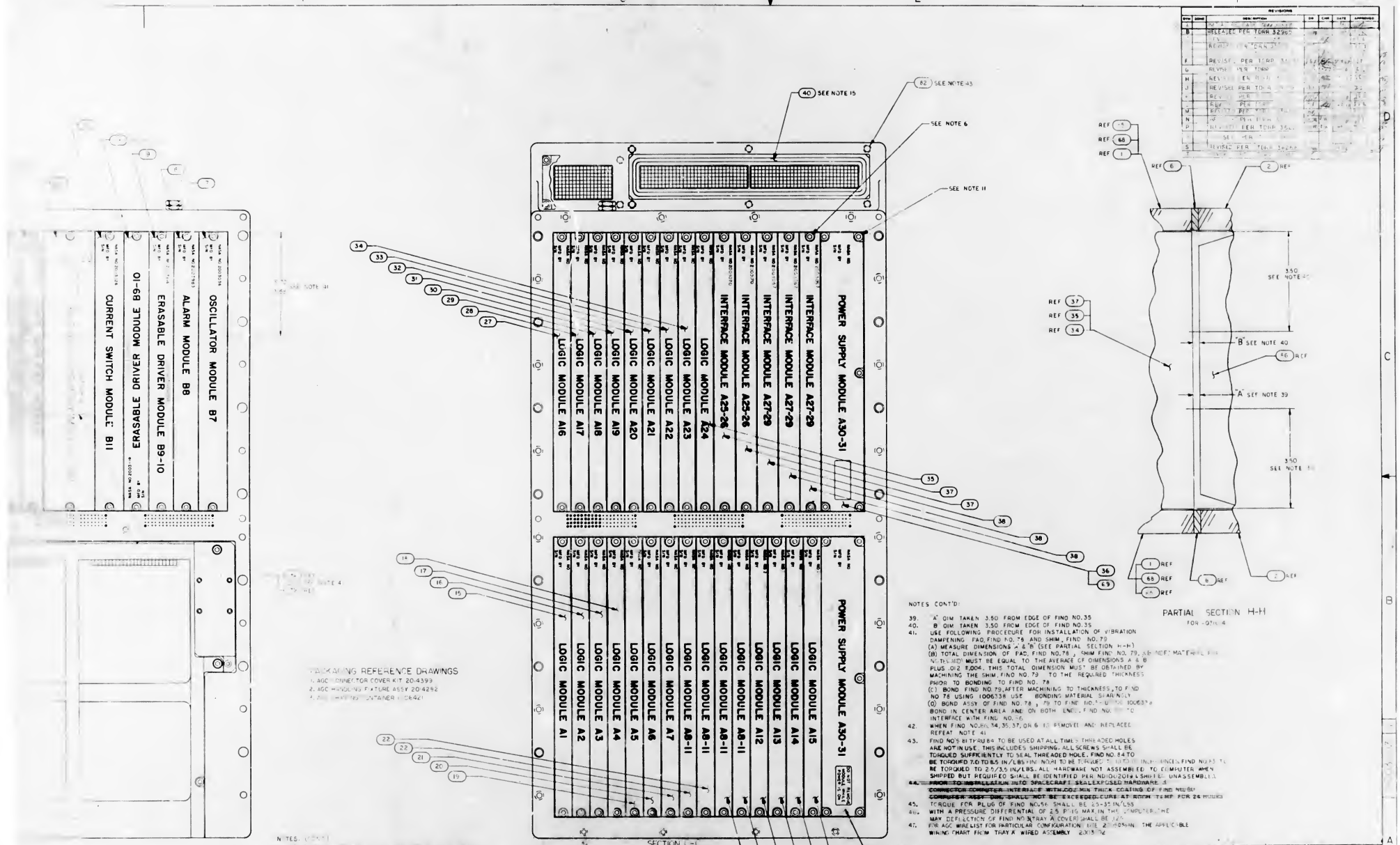
SEE NOTE 15
SEE NOTE 43
SEE NOTE 6
SEE NOTE 11
OSCILLATOR MODULE B7
ALARM MODULE B8
ERASABLE DRIVER MODULE B9-10
ERASABLE DRIVER MODULE B9-10
CURRENT SWITCH MODULE B11
LOGIC MODULE A16
LOGIC MODULE A17
LOGIC MODULE A18
LOGIC MODULE A19
LOGIC MODULE A20
LOGIC MODULE A21
LOGIC MODULE A22
LOGIC MODULE A23
LOGIC MODULE A24
INTERFACE MODULE A25-26
INTERFACE MODULE A25-26
INTERFACE MODULE A27-29
INTERFACE MODULE A27-29
INTERFACE MODULE A27-29
POWER SUPPLY MODULE A30-31
LOGIC MODULE A1
LOGIC MODULE A2
LOGIC MODULE A3
LOGIC MODULE A4
LOGIC MODULE A5
LOGIC MODULE A6
LOGIC MODULE A7
LOGIC MODULE A8-11
LOGIC MODULE A8-11
LOGIC MODULE A8-11
LOGIC MODULE A8-11
LOGIC MODULE A12
LOGIC MODULE A13
LOGIC MODULE A14
LOGIC MODULE A15
POWER SUPPLY MODULE A30-31
SEE NOTE 19
SECTION C-C
PARTIAL SECTION H-H
FOR -071 & 4
"B" SEE NOTE 40
"A" SEE NOTE 39
3.50 SEE NOTE 40
3.50 SEE NOTE 39
PACKAGING REFERENCE DRAWINGS
1. AGC CONNECTOR COVER KIT 2014399
2. AGC HANDLING FIXTURE ASSY 2014282
NOTES CONT'D:
39. "A" DIM TAKEN 3.50 FROM EDGE OF FIND NO.35
40. "B" DIM TAKEN 3.50 FROM EDGE OF FIND NO.35
41. USE FOLLOWING PROCEDURE FOR INSTALLATION OF VIBRATION DAMPENING PAD, FIND NO. 78 AND SHIM, FIND NO. 79
(A) MEASURE DIMENSIONS "A" & "B" (SEE PARTIAL SECTION H-H)
(B) TOTAL DIMENSION OF PAD, FIND NO.78, SHIM FIND NO. 79, AND BONDING MATERIAL FIND NO.76 USED MUST BE EQUAL TO THE AVERAGE OF DIMENSIONS A & B PLUS .012 ±.004. THIS TOTAL DIMENSION MUST BE OBTAINED BY MACHINING THE SHIM, FIND NO. 79 TO THE REQUIRED THICKNESS PRIOR TO BONDING TO FIND NO. 78
(C) BOND FIND NO.79, AFTER MACHINING TO THICKNESS, TO FIND NO 78 USING 1006338 USE BONDING MATERIAL SPARINGLY
(D) BOND ASSY OF FIND NO.78, 79 TO FIND NO.56 USING 1006338 BOND IN CENTER AREA ONE ON BOTH ENDS. FIND NO. 78 TO INTERFACE WITH FIND NO. 56
42. WHEN FIND NO.6, 34, 35, 37, OR 6-13 REMOVED AND REPLACED REFEAT NOTE 41
43. FIND NOS 8 THRU 86 TO BE USED AT ALL TIMES THREADED HOLES ARE NOT IN USE. THIS INCLUDES SHIPPING. ALL SCREWS SHALL BE TORQUED SUFFICIENTLY TO SEAL THREADED HOLE. FIND NO. 84 TO BE TORQUED 7.0 TO 8.5 IN/LBS FIND NO.41 TO BE TORQUED TO 10 TO 12 IN/LBS FIND NO.43 TO BE TORQUED TO 2.5/3.5 IN/LBS. ALL HARDWARE NOT ASSEMBLED TO COMPUTER WHEN SHIPPED BUT REQUIRED SHALL BE IDENTIFIED PER NDI00201 & SHIPPED UNASSEMBLED
44. PRIOR TO INSTALLATION INTO SPACECRAFT SEAL EXPOSED HARDWARE & CONNECTOR COMPUTER INTERFACE WITH CODE MIN THICK COATING OF FIND NO.88. COMPUTER ASSY DOES SHALL NOT BE EXCEEDED CURE AT ROOM TEMP FOR 24 HOURS
45. TORQUE FOR PLUG OF FIND NO.56 SHALL BE 2.5-3.5 IN/LBS
46. WITH A PRESSURE DIFFERENTIAL OF 2.5 PSIG MAX IN THE COMPUTER THE MAX DEFLECTION OF FIND NO.3 TRAY A COVER SHALL BE .125
47. FOR AGC WIRE LIST FOR PARTICULAR CONFIGURATION USE 2003094N. THE APPLICABLE WIRING CHART FROM TRAY A WIRED ASSEMBLY 2003092
NOTES. (CONT)
33. SHIM AS REQUIRED, PRIOR TO ASSY OF FIND NO. 6, SURFACE C TO WITHIN ±.002 OF SURFACE B USING FIND NO. 72 NOTE TO INCLUDE .004 REF DIMENSION OF FIND NO. 72
34. SHIM AS REQUIRED, PRIOR TO ASSY OF FIND NO. 6, SURFACE C TO WITHIN ±.002 OF SURFACE B USING FIND NO. 71
35. USE TRAY A WIRED ASSY PART NO. 2003092-041 OR PART NO. 2003092-041 OR PART NO. 2001052-071
36. FOR -031 CONFIGURATION ONLY USE LOGIC MODULE A1 THRU A24 PART NOS. 2003888-011 THRU 2003888-23, SEE CHART 'A'
37. FOR 1/0214/041 CONFIGURATION ONLY USE LOGIC MODULE A1 THRU A24, FIND NOS. 15 THRU 35, PART NOS. 2003121-011 THRU 2003121-23 AND/OR 2003888-011 THRU 2003888-23, SEE CHART 'A'
WHEN A COMPUTER IS COMPRISED OF LOGIC MODULES A1 THRU A24, PART NOS. 2003888-011 THRU 2003888-23 AND A TRAY A WIRED ASSY 2003092-041 OR 2003092-071 IT SHALL BE DESIGNATED 2003993-031
REVISIONS
B RELEASED PER TDRR 32965
F REVISE PER TDRR
G REVISE PER TDRR
H REVISE PER TDRR
J REVISED PER TDRR
M REVISED PER TDRR
N REVISED PER TDRR
P REVISED PER TDRR
S REVISED PER TDRR
LIST OF MATERIALS
MIT INSTRUMENTATION LAB CAMBRIDGE MASS
MANNED SPACECRAFT CENTER HOUSTON TEXAS
COMPUTER ASSEMBLY
UNLESS OTHERWISE SPECIFIED DIMENSIONS ARE IN INCHES
DO NOT SCALE THIS DRAWING
80230
J
2003993
SCALE 1/1
SHEET 2 OF 2

2004003 B

REVISIONS 18731

SYM	DESCRIPTION	DATE	APPROVAL
A	REVISED PER TDRR 19680	27 APR 65	
B	REVISED PER TDRR 33429	2 MAY 67	

PART NO.	SCD NO.		MARKING INK	
2004003-001	1006769	POTTED	1006271-8	SEE NOTE 6
2004003-002	1006769	UNPOTTED	1006271-8	SEE NOTE 6
2004003-003	1006769	POTTED	1006271-11	

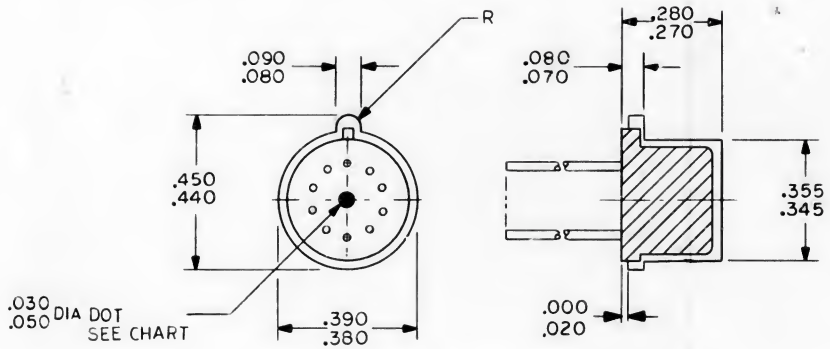

POTTED

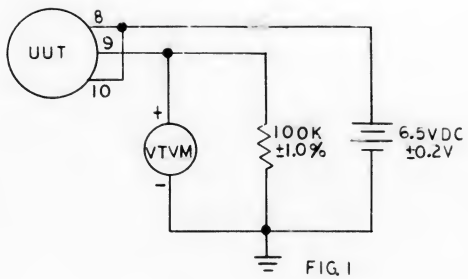

FIG. 1

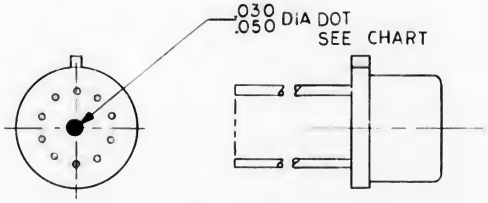

UNPOTTED

GENERAL REQUIREMENTS:

UPON COMPLETION OF ALL REQUIREMENTS AS SPECIFIED IN ND 1002265 ONLY THOSE SENSE AMPLIFIERS FROM LOTS WHICH QUALIFY FOR FLIGHT HARDWARE UNDER THE PROVISIONS OF ND 1002265 SHALL BE MARKED AS INDICATED IN THIS DOCUMENT

NOTES:

1. INTERPRET DRAWING IN ACCORDANCE WITH STANDARDS PRESCRIBED BY MIL-D-70327
2. ELECTRICAL REQUIREMENTS:
   A. ALL SENSE AMPLIFIERS, AFTER ENCAPSULATION, SHALL HAVE THEIR ELECTRICAL ACCEPTANCE REQUIREMENTS WITHIN THE LIMITS SET BY THE ORIGINAL SCD
3. CONSTRUCTION REQUIREMENTS:
   A. ENCAPSULATE PER ND 1002183
   B. ALL LEADS AND HEADER ARE TO BE FREE OF POTTING MATERIAL AND THEY SHALL NOT SHOW ANY DEFECT DUE TO THE POTTING PROCESS, SUCH AS BENDS, KINKS, PLATING DAMAGE ETC
4. THERE SHALL BE A MINIMUM ENCAPSULATION THICKNESS OF .003
5. IDENTIFY WITH DRAWING NO. AND REVISION PER ND 1002019
6. 2004003-001 AND-002 UNITS SHALL EXHIBIT A LEAKAGE CURRENT OF NMT 1.0 MICROAMPERES WHEN TESTED AS SHOWN IN FIG. 1

QTY REQD	PART OR IDENTIFYING NO.	NOMENCLATURE OR DESCRIPTION	FIND NO.

LIST OF MATERIALS

NEXT ASSY	USED ON
APPLICATION	

UNLESS OTHERWISE SPECIFIED DIMENSIONS ARE IN INCHES
TOLERANCES ON
FRACTIONS ± — DECIMALS ± — ANGLES ± —
DO NOT SCALE THIS DRAWING
MATERIAL —
HEAT TREATMENT —
FINAL FINISH —

MIT INSTRUMENTATION LAB
CAMBRIDGE, MASS.
DWG. NO. CONTRACT

DRAWN Mahoney DATE 6 FEB 64
CHECKED 12 FEB 64
APPROVAL 27 APR 65
APPROVAL 27 APR 65
NASA APPROVAL 5-4-65
MIT APPROVAL 27 APR 65

MANNED SPACECRAFT CENTER
HOUSTON, TEXAS

INTEGRATED SENSE AMPLIFIER
(FLIGHT QUALIFIED)

CODE IDENT NO.	SIZE	NASA DRAWING NO.
80230	C	2004003

SCALE 4/1 WT SHEET 1 OF 1

2004003

2004004 E

REVISIONS 18731

SYM	DESCRIPTION	DATE	APPROVAL
A	REVISED PER TDRR 19683	28 Apr 65	KCH
B	REVISED PER TDRR 23630 DR A.J. Brown CHK Chen APPD RZB	11/4/65	
C	REVISED PER TDRR 24200 DR E. Uhring CHK Chen APPD	12/7/65	
D	REVISED PER TDRR 24669 DR D.A. Clement CHK Chen APPD	12/22/65	
E	REVISED PER TDRR 27742 DR J.P. Lemard CHK R.E.E. APPD	14 April	

PART NO.	FIND NO. 1 TRANSISTOR NO.	DOT COLOR		MARKING INK	~~FIND NO. 2~~
2004004-001	1006323	YELLOW	POTTED	1006271-4	
2004004-002	1006310	GREEN	POTTED	1006271-5	
2004004-003	1006323	YELLOW	UNPOTTED	1006271-4	~~2004165~~
2004004-004	1006310	GREEN	UNPOTTED	1006271-5	~~2004165~~
2004004-005	1006323	RED	UNPOTTED	1006271-8	~~2004165~~ SEE CHART A

GENERAL REQUIREMENT:

UPON COMPLETION OF ALL REQUIREMENTS AS SPECIFIED IN ND 1002266 ONLY THOSE TRANSISTORS FROM LOTS WHICH QUALIFY FOR FLIGHT HARDWARE UNDER THE PROVISIONS OF ND 1002266 SHALL BE MARKED AS INDICATED IN THIS DOCUMENT

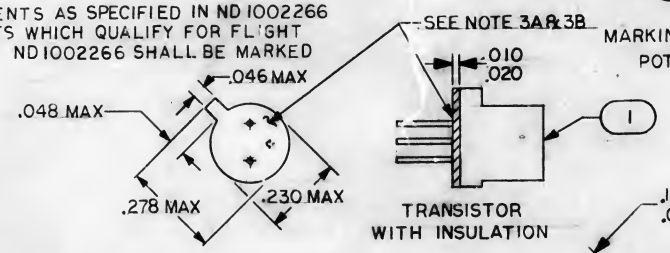

TRANSISTOR WITH INSULATION

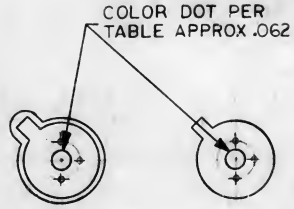

MARKING VIEW POTTED

MARKING VIEW UNPOTTED

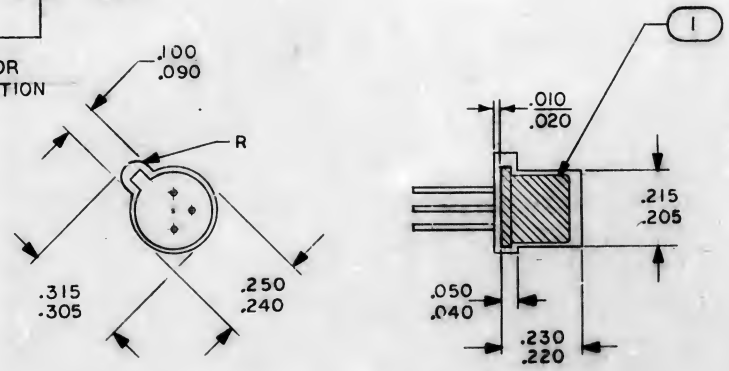

POTTED VIEWS

NOTES:

1. INTERPRET DRAWING IN ACCORDANCE WITH STANDARDS PRESCRIBED BY MIL-D-70327
2. ELECTRICAL REQUIREMENTS UNLESS OTHERWISE SPECIFIED
   A. ALL TRANSISTORS, AFTER ENCAPSULATION, SHALL HAVE THEIR ELECTRICAL ACCEPTANCE REQUIREMENTS WITHIN THE LIMITS SET BY THE ORIGINAL SCD
3. CONSTRUCTION REQUIREMENTS:
   A. ENCAPSULATE PER ND1002183 TYPE II
   B. ALL LEADS AND HEADER ARE TO BE FREE OF POTTING MATERIAL AND THEY SHALL NOT SHOW ANY DEFECT DUE TO THE POTTING, SUCH AS; BENDS, KINKS, PLATING DAMAGE, ETC
   C. THERE SHALL BE A MINIMUM ENCAPSULATION THICKNESS OF .003
4. IDENTIFY WITH DRAWING NO. AND REVISION PER ND 1002019
5. ~~BOND FIND NO. 2 TO FIND NO. 1 USING 100 PARTS BY WEIGHT OF 1006356, 10 PARTS BY WEIGHT OF TT-T-548, 26.5 PARTS BY WEIGHT OF 1006355 AND CURE AT 160° ± 5°F FOR 16 HOURS MINIMUM~~

CHART A

TEST	CONDITIONS	SYM	LIMITS MIN	LIMITS MAX	UNITS
D.C. CURRENT GAIN	$I_C = 0.1$ mA, $V_{CE} = 1.0$V	h_{FE}	25	—	—
COLLECTOR TO BASE CUTOFF CURRENT	$V_{CB} = 8$V, $I_E = 0$	I_{CBO}	—	25	nA
COLLECTOR TO EMITTER SATURATION VOLTAGE	$I_C = 1.6$ MA, $I_B = 0.5$ MA	(SAT) V_{CE}	—	0.2	V

QTY REQD	PART OR IDENTIFYING NO.	NOMENCLATURE OR DESCRIPTION	FIND NO.
~~1~~	~~SEE CHART~~	~~INSULATOR, TRANSISTOR~~	~~2~~
1	SEE CHART	TRANSISTOR SILICON (FLIGHT QUALIFIED)	1

LIST OF MATERIALS

NEXT ASSY	USED ON
APPLICATION	

UNLESS OTHERWISE SPECIFIED DIMENSIONS ARE IN INCHES
TOLERANCES ON
FRACTIONS ± — DECIMALS ± — ANGLES ± —
DO NOT SCALE THIS DRAWING
MATERIAL
HEAT TREATMENT
FINAL FINISH

MIT INSTRUMENTATION LAB
CAMBRIDGE, MASS.
DWG. NO. CONTRACT
DRAWN R.D. Olsen DATE 16 APR 65
CHECKED
APPROVAL 27 APR 65
APPROVAL
NASA APPROVAL 5-4-65
MIT APPROVAL 27 Apr 65

MANNED SPACECRAFT CENTER
HOUSTON, TEXAS

TRANSISTOR, SILICON
(FLIGHT QUALIFIED)

CODE IDENT NO.	SIZE	NASA DRAWING NO.
80230	C	2004004

SCALE 4/1 WT SHEET 1 OF 1

2004012

REVISIONS 18684			
SYM	DESCRIPTION	DATE	APPROVAL

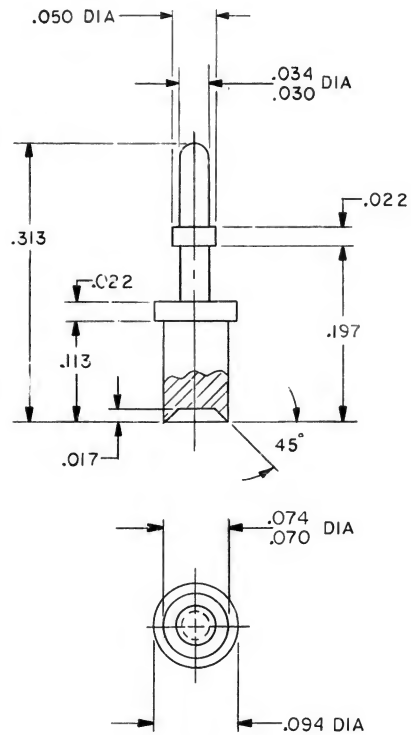

NOTES

1. INTERPRET DRAWING IN ACCORDANCE WITH STANDARDS PRESCRIBED BY MIL-D-70327
2. MATERIAL: NICKEL PER MIL-N-43026
3. REMOVE BURRS AND BREAK SHARP EDGES .005/.015
4. UNLESS OTHERWISE SPECIFIED 125 ALL OVER
5. FINISH: GOLD PLATE IN ACCORDANCE WITH MIL-G-45204, TYPE II, CLASS I (COPPER STRIKE)
6. IDENTIFY PER ND 1002019

QTY REQD	PART OR IDENTIFYING NO.	NOMENCLATURE OR DESCRIPTION	FIND NO.

LIST OF MATERIALS

2003008	
NEXT ASSY	USED ON
APPLICATION	

UNLESS OTHERWISE SPECIFIED DIMENSIONS ARE IN INCHES
TOLERANCES ON
FRACTIONS ± — DECIMALS ±.005 ANGLES ± 1°
DO NOT SCALE THIS DRAWING
MATERIAL SEE NOTE 2
HEAT TREATMENT —
FINAL FINISH SEE NOTE 5

MIT INSTRUMENTATION LAB
CAMBRIDGE, MASS.
DWG. NO. CONTRACT
DRAWN L. Pahlini DATE 28 Apr 64
CHECKED
APPROVAL 23 Apr 64
APPROVAL 23 Apr 65
NASA APPROVAL 4-27-65
MIT APPROVAL 27 Apr 65

MANNED SPACECRAFT CENTER
HOUSTON, TEXAS

TERMINAL
ERASABLE MEMORY

CODE IDENT NO.	SIZE	NASA DRAWING NO.
80230	C	2004012
SCALE 10/1	WT —	SHEET 1 OF 1

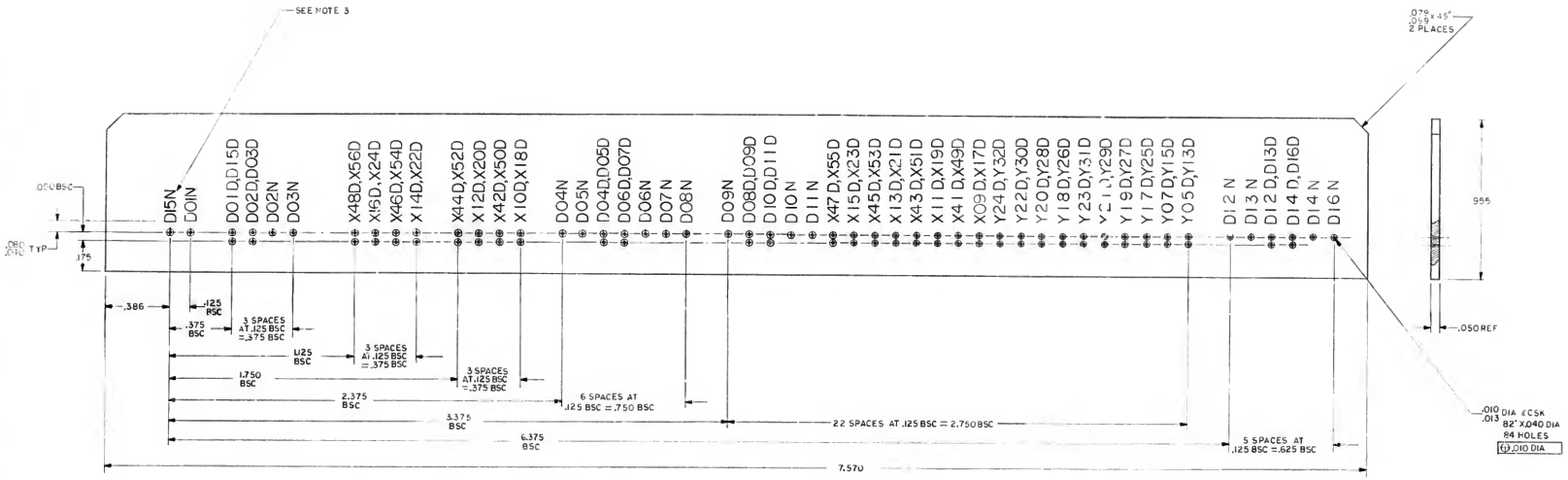

NOTES

1. INTERPRET DRAWING IN ACCORDANCE WITH STANDARDS PRESCRIBED BY MIL-D-70327
2. MATERIAL: PLASTIC SHEET, .050 THICK LAMINATED PER MIL-P-16177 TYPE GEE
3. MARK .10/.08 HIGH WHITE CHARACTERS PER ND1002122 TYPE II CLASS I & PER ND1002019 USING INK 1006271—1
4. IDENTIFY WITH DRAWING NUMBER & REVISION PER ND1002019
5. REMOVE ALL BURRS AND BREAK SHARP EDGES .005/.015

QTY REQD	PART OR IDENTIFYING NO	NOMENCLATURE OR DESCRIPTION	FIND NO
		LIST OF MATERIALS	

2003009		UNLESS OTHERWISE SPECIFIED DIMENSIONS ARE IN INCHES TOLERANCES ON FRACTIONS ± DECIMALS ±.005 ANGLES ± 1°	
NEXT ASSY	USED ON	DO NOT SCALE THIS DRAWING	
APPLICATION		MATERIAL SEE NOTE 2	
		HEAT TREATMENT	
		FINAL FINISH	

NIT INSTRUMENTATION LAB (Cambridge, Mass.) — MANNED SPACECRAFT CENTER, HOUSTON TEXAS

DRAWN — DATE
CHECKED — DATE
APPROVAL — DATE
APPROVAL — DATE
NASA APPROVAL — DATE
MIT APPROVAL — DATE

SIDE PLATE A
ERASABLE MEMORY

CODE IDENT NO 80230 | SIZE E | NASA DRAWING NO 2004014
SCALE 4/1 | WT | SHEET 1 OF 1

2004015

REVISIONS

SYM	DESCRIPTION	DATE

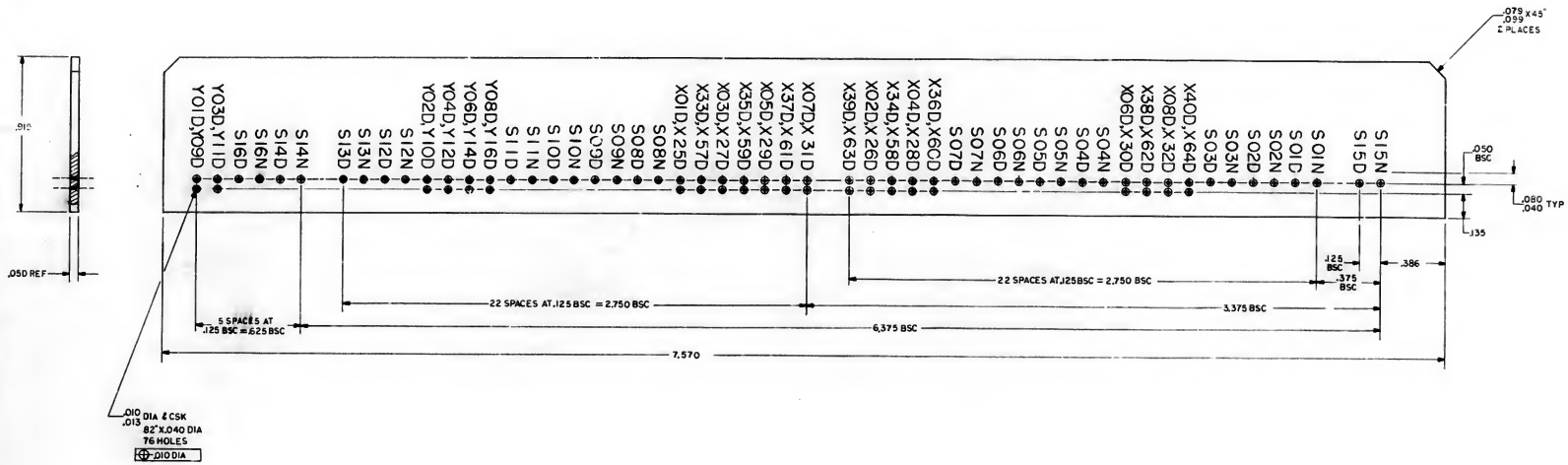

NOTES

1. INTERPRET DRAWING IN ACCORDANCE WITH STANDARDS PRESCRIBED BY MIL-D-70327
2. MATERIAL: PLASTIC SHEET, .050 THICK LAMINATED PER MIL-P-18177 TYPE GEE
3. MARK .10/.08 HIGH WHITE CHARACTERS PER ND 1002122 TYPE II CLASS I & PER ND1002019 USING INK 1006271-1
4. IDENTIFY WITH DRAWING NUMBER & REVISION PER ND1002019
5. REMOVE ALL BURRS AND BREAK SHARP EDGES .005/.015

QTY REQD	PART OR IDENTIFYING NO	NOMENCLATURE OR DESCRIPTION
		LIST OF MATERIALS

UNLESS OTHERWISE SPECIFIED DIMENSIONS ARE IN INCHES
TOLERANCES ON
FRACTIONS ± — DECIMALS ±.005 ANGLES ± 1°
DO NOT SCALE THIS DRAWING
MATERIAL SEE NOTE 2
HEAT TREATMENT
FINAL FINISH

2003009
NEXT ASSY | USED ON
APPLICATION

M I T
INSTRUMENTATION LAB
Cambridge Mass
DRAWN
CHECKED
APPROVAL
APPROVAL
NASA APPROVAL
MIT APPROVAL

MANNED SPACECRAFT CENTER
HOUSTON, TEXAS

SIDE PLATE B
ERASABLE MEMORY

CODE IDENT NO.	SIZE	NASA DRAWING NO
80230	E	2004015

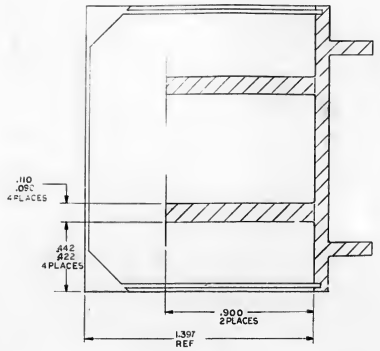

SECTION C-C

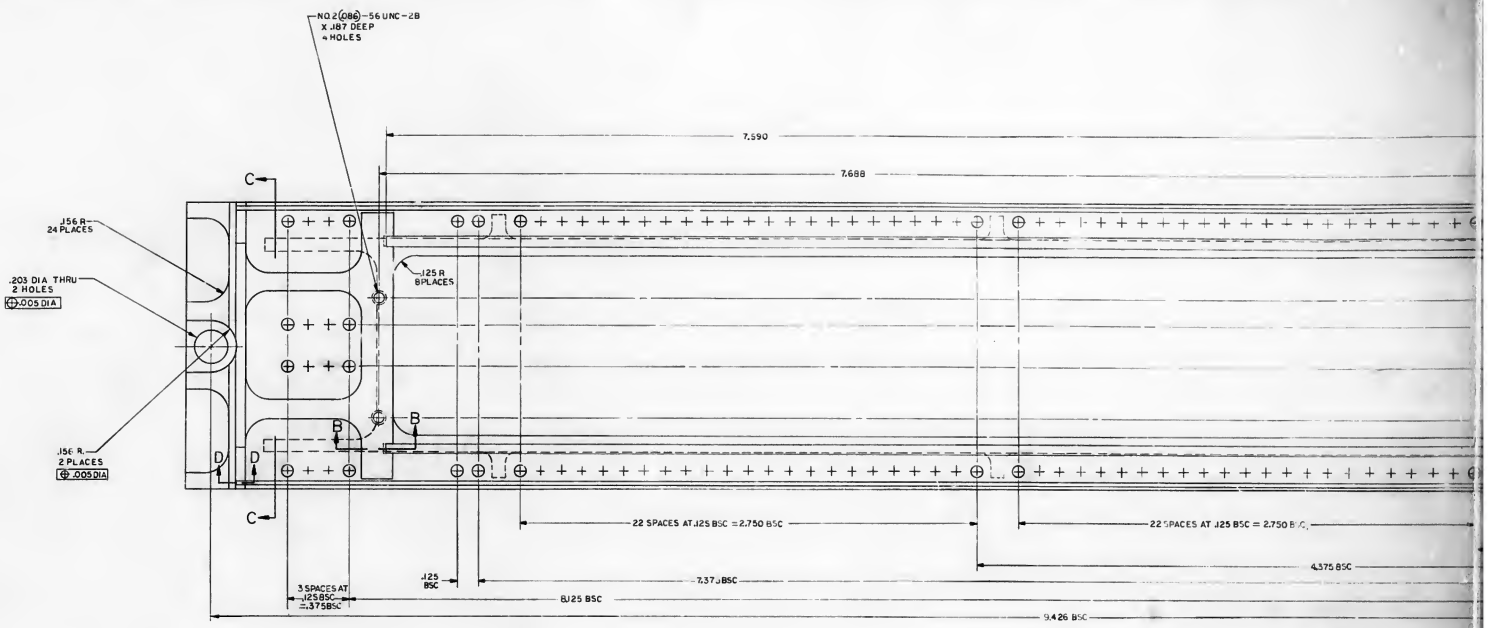

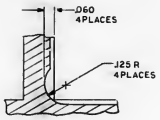

PARTIAL SECTION B-B

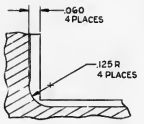

PARTIAL SECTION D-D

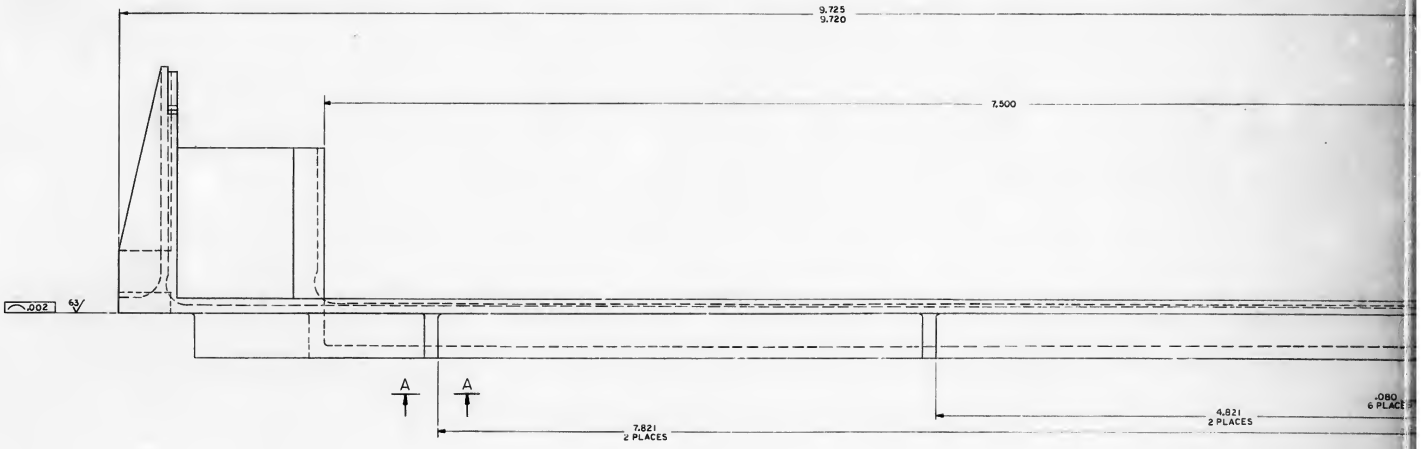

PARTIAL VIEW A-A

NOTES

1. INTERPRET DRAWING IN ACCORDANCE WITH STANDARDS PRESCRIBED BY MIL-D-70327
2. MATERIAL: MAG ALLOY ZK60A-T5 PER QQ-M-31
3. FINISH: ANODIZE PER MIL-M-45202, TYPE I, CLASS C
4. ALL SURFACES 125 UNLESS OTHERWISE SPECIFIED
5. REMOVE ALL BURRS AND BREAK SHARP EDGES .005 -.015
6. UNLESS OTHERWISE SPECIFIED ALL FILLETS AND RADII TO BE .010 MAX
7. IDENTIFY WITH DRAWING NO. AND REVISION PER ND1002019
8. THREADED HOLE TO BE FREE OF ANODIZE

2004026

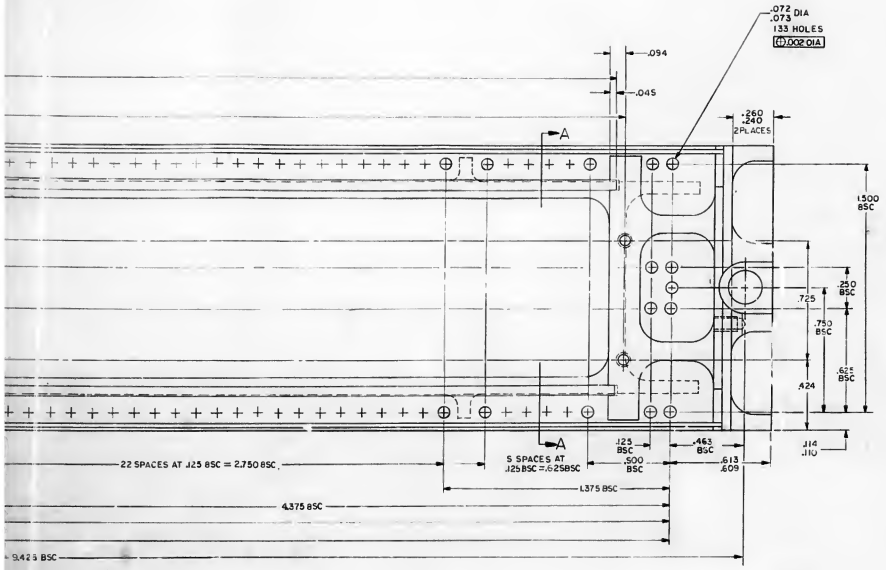

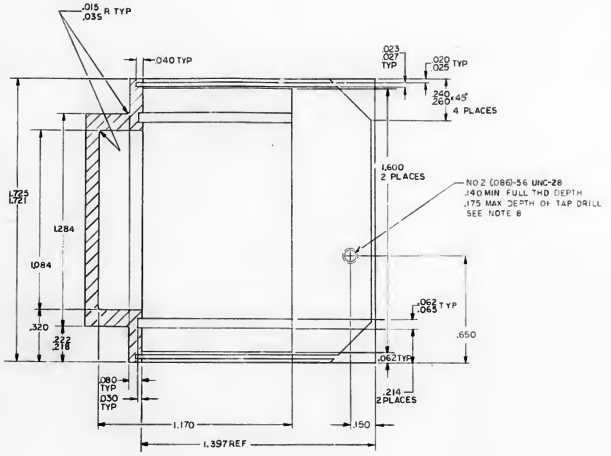

SECTION A–A

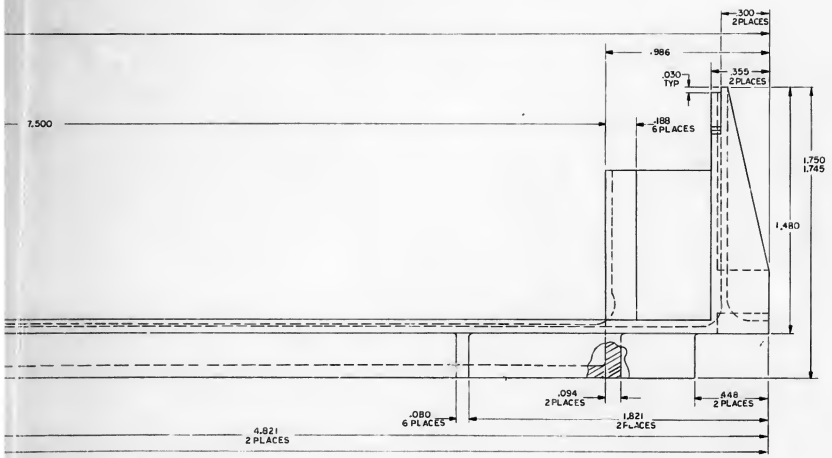

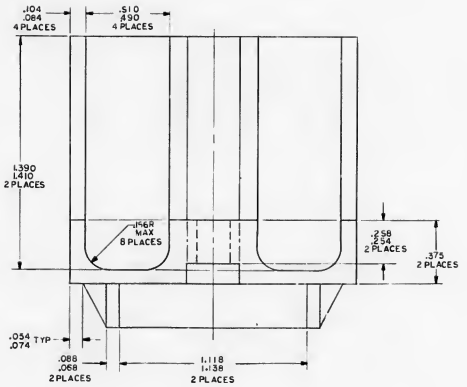

QTY REQD	PART OR IDENTIFYING NO	NOMENCLATURE OR DESCRIPTION	FIND NO
		LIST OF MATERIALS	

UNLESS OTHERWISE SPECIFIED DIMENSIONS ARE IN INCHES
TOLERANCES ON
FRACTIONS ± — DECIMALS .005 ANGLES ± —
DO NOT SCALE THIS DRAWING
MATERIAL SEE NOTE 2
HEAT TREATMENT —
FINAL FINISH SEE NOTE 3

2003010

NEXT ASSY | USED ON
APPLICATION

BELL INSTRUMENTATION LAB
DRAWN DATE 2/4/68
CHECKED
APPROVAL
APPROVAL
NASA APPROVAL
MIT APPROVAL

MANNED SPACECRAFT CENTER
HOUSTON, TEXAS

HEADER HOUSING
ERASABLE MEMORY

CODE IDENT NO 80230 | SIZE J | NASA DRAWING NO 2004026

2004026

2004026

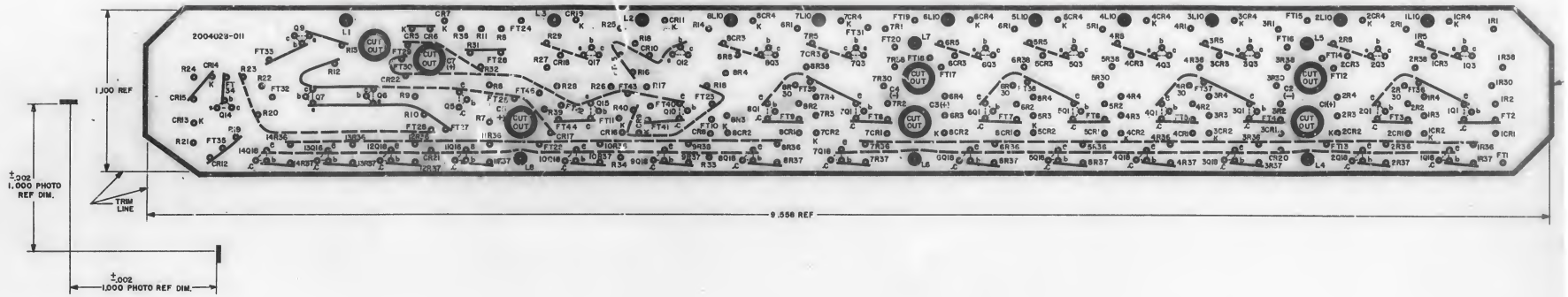

NOTES:

1. INTERPRET DRAWING ACCORDANCE WITH STANDARDS PRESCRIBED BY MIL-D-70327
2. ORIGINAL OF THIS DRAWING OR REPRODUCTION MADE BY A PROCESS OR METHOD SHALL INSURE DIMENSIONAL STABILITY.
3. CUT TO WITHIN .010 OF TRIM LINE
4. MAKE MASTER PATTERN POSITIVE FILM TO DIMENSIONS SHOWN
5. MATERIAL: FILM .006/.008 THICK PER L-F-340 TYPE IB, CLASS 2, STYLE IA
6. ● .040/.050 DIA HOLE
7. ● .077/.087 DIA HOLE
8. BROKEN LINE DENOTES SLEEVING
9. APPLY FIND NO. 2 TO FAR SIDE OF FIND NO. 1

AR	100631R
1	2004028
QTY REQD	
-011	

UNLESS OTHERWISE SPECIFIED DIMENSIONS ARE IN INCHES
TOLERANCES ON
FRACTIONS ± — DECIMALS ± — ANGLES ± —
DO NOT SCALE THIS DRAWING
MATERIAL SEE NOTE 5
HEAT TREATMENT —
FINAL FINISH —

NEXT ASSY	USED ON
2003014	
APPLICATION	

DRAWN HOBBLAN
CHECKED
APPROVAL
APPROVAL
NASA APPROVAL
MFT. APPROVAL

2004028

REVISIONS			
SYM	DESCRIPTION	DATE	APPROVED
A	REVISED PER TDR A 17744		

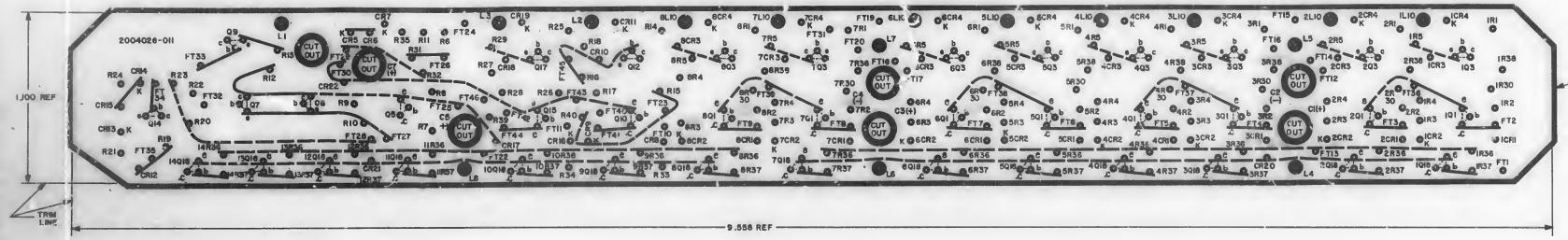

.002
1.000 PHOTO REF DIM.

BOARD PRESCRIBED
IN MADE BY A PROCESS
STABILITY.

O DIMENSIONS SHOWN
F-340 TYPE IB, CLASS 2, STYLE IA

QTY REQD	PART OR IDENTIFYING NO.	NOMENCLATURE OR DESCRIPTION	FIND NO.
AR	1006318	ADHESIVE	2
1	2004026-001	INSULATOR	1
-011		LIST OF MATERIALS	

UNLESS OTHERWISE SPECIFIED DIMENSIONS ARE IN INCHES TOLERANCES ON FRACTIONS ± — DECIMALS ± — ANGLES ± —	MIT INSTRUMENTATION LAB Charles S. Draper Cambridge, Massachusetts
DO NOT SCALE THIS DRAWING	DRAWN HORGAN DATE 10-6-66
MATERIAL SEE NOTE 5	CHECKED 10-6-66
HEAT TREATMENT —	APPROVAL 10/11/66
FINAL FINISH —	APPROVAL 10-6-66
2003014 NEXT ASSY / USED ON / APPLICATION	NASA APPROVAL 10/11/66
	MIT APPROVAL 10-7-66

MANNED SPACECRAFT CENTER
HOUSTON, TEXAS

INSULATOR (A) PHOTOGRAPHIC MASTER
ERASABLE DRIVER MODULE

CODE IDENT NO. J — NASA DRAWING NO. 2004028
SCALE 4/1 — WT — SHEET 1 OF 1

2004028

2004028

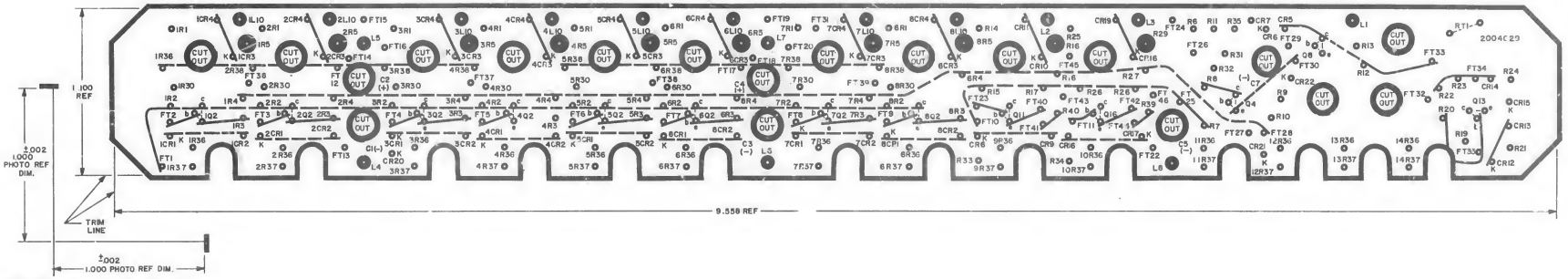

NOTES:

1. INTERPRET DRAWING IN ACCORDANCE WITH STANDARDS PRESCRIBED BY MIL-D-70327
2. ORIGINAL OF THIS DRAWING OR REPRODUCTION MADE BY A PROCESS OR METHOD SHALL INSURE DIMENSIONAL STABILITY.
3. CUT TO WITHIN .010 OF TRIMLINE
4. MAKE MASTER PATTERN POSITIVE FILM TO DIMENSIONS SHOWN
5. MATERIAL: FILM .008/.008 THICK, SENSITIZED, DIMENSIONALLY STABLE PER L-F-340, TYPE IB, CLASS 2, STYLE IA
6. ⊙ .010/.050 DIA HOLE
7. ● .077/.087 DIA HOLE
8. ● .120/.130 DIA HOLE
9. BROKEN LINE DENOTES SLEEVING
10. ALL CUTOUT TO BE .22/.20 DIA

		UNLESS OTHERWISE SPECIFIED DIMENSIONS ARE IN INCHES TOLERANCES ON FRACTIONS DECIMALS ± ± DO NOT SCALE THIS DRAWING
2003014		MATERIAL SEE NOTES
		HEAT TREATMENT
NEXT ASSY	USED ON	FINIS. FINISH
APPLICATION		

2004029

SYM	DESCRIPTION	DATE	APPROVED
A	REV. PER TDRR 764		
B	REV. PER TDRR 1403		

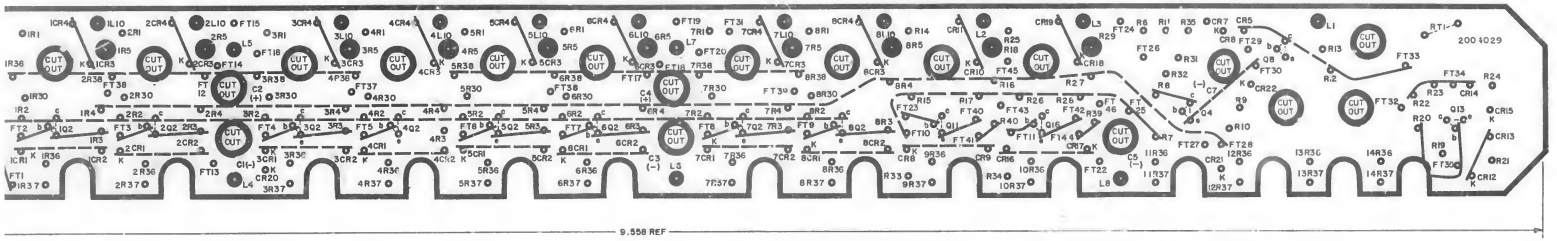

DIM.

SCRIBED

PROCESS

SHOWN

STABLE PER L-F-340, TYPE IB, CLASS 2, STYLE IA

QTY REQD	PART OR IDENTIFYING NO	NOMENCLATURE OR DESCRIPTION	FUNC NO
		LIST OF MATERIALS	

UNLESS OTHERWISE SPECIFIED DIMENSIONS ARE IN INCHES
TOLERANCES ON
FRACTIONS — DECIMALS — ANGLES —
DO NOT SCALE THIS DRAWING
MATERIAL SEE NOTES
HEAT TREATMENT —
FINAL FINISH —

2003014 | NEXT ASSY | USED ON | APPLICATION

MIT INSTRUMENTATION LAB CAMBRIDGE MASS

DRAWN Louis B. Lucas DATE Feb 68
CHECKED
APPROVAL
APPROVAL
NASA APPROVAL
MIT APPROVAL

MANNED SPACECRAFT CENTER
HOUSTON TEXAS

INSULATOR (B) PHOTOGRAPHIC MASTER
ERASABLE DRIVER MODULE

CODE IDENT NO 80230 | SIZE J | NASA DRAWING NO 2004029

SCALE 4/1 | WT — | SHEET 1 OF 1

2004029

REVISIONS 12/7/64			
SYM	DESCRIPTION	DATE	APPROVAL

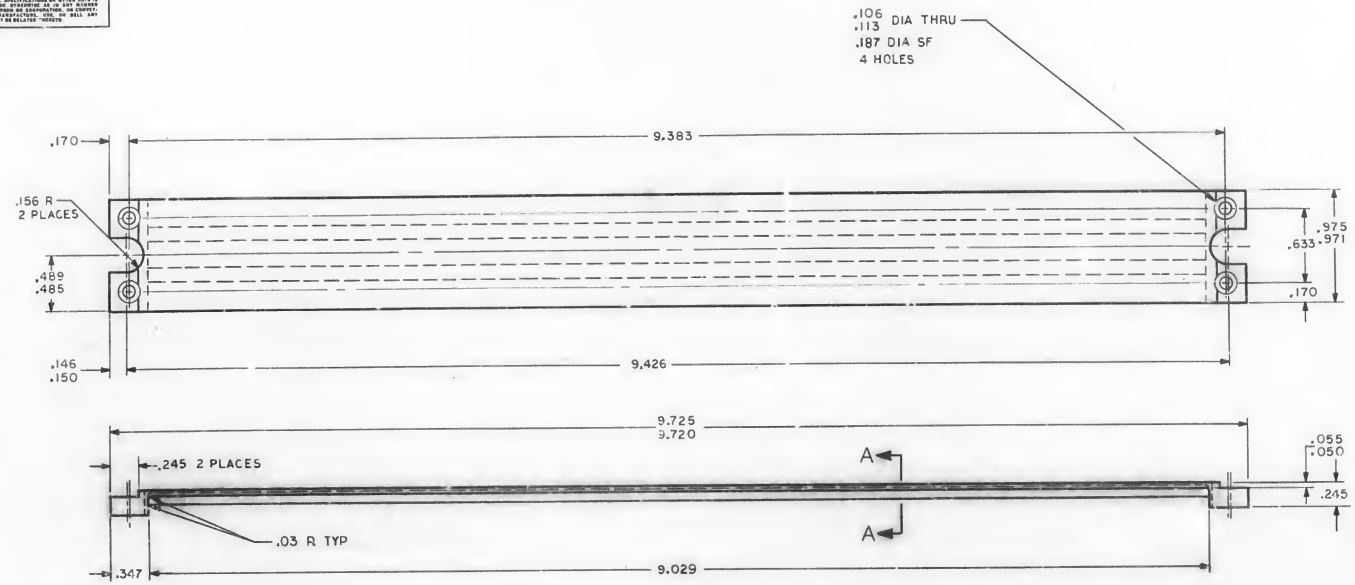

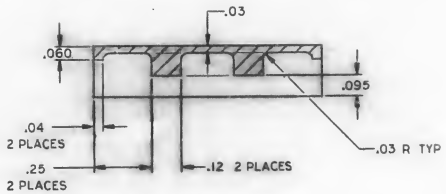

SECTION A-A
SCALE 4/1

NOTES:
1. INTERPRET DRAWING IN ACCORDANCE WITH STANDARDS PRESCRIBED BY MIL-D-70327
2. MATERIAL: MAGNESIUM ZK60A-T5 PER QQ-M-31, TEMP 5
3. FINISH: ANODIZE PER MIL-M-45202, TYPE I, CLASS C
4. ALL SURFACES 125 UNLESS OTHERWISE SPECIFIED
5. REMOVE BURRS AND SHARP EDGES .005/.015
6. UNLESS OTHERWISE SPECIFIED ALL FILLETS AND RADII TO BE .020 MAX
7. IDENTIFY WITH DRAWING NO. AND REVISION PER NDI002019

QTY REQD	PART OR IDENTIFYING NO.	NOMENCLATURE OR DESCRIPTION	FIND NO.

LIST OF MATERIALS

2003026	
2003040	
NEXT ASSY	USED ON
APPLICATION	

UNLESS OTHERWISE SPECIFIED DIMENSIONS ARE IN INCHES
TOLERANCES ON
FRACTIONS ± — DECIMALS XXX ±.005 XX .01 ANGLES ± —
DO NOT SCALE THIS DRAWING
MATERIAL SEE NOTE 2
HEAT TREATMENT —
FINAL FINISH SEE NOTE 3

MIT INSTRUMENTATION LAB
CAMBRIDGE MASS
DWG. NO. CONTRACT
DRAWN Tony Gill DATE 12/4/64
CHECKED
APPROVAL
APPROVAL
NASA APPROVAL 12-1-65
MIT APPROVAL

MANNED SPACECRAFT CENTER
HOUSTON, TEXAS

COVER

CODE IDENT NO.	SIZE	NASA DRAWING NO.
—	D	2004032
SCALE 2/1	WT —	SHEET 1 OF 1

REVISIONS 15730					
SYM	ZONE	DESCRIPTION	DR	CHK	DATE	APPROVED

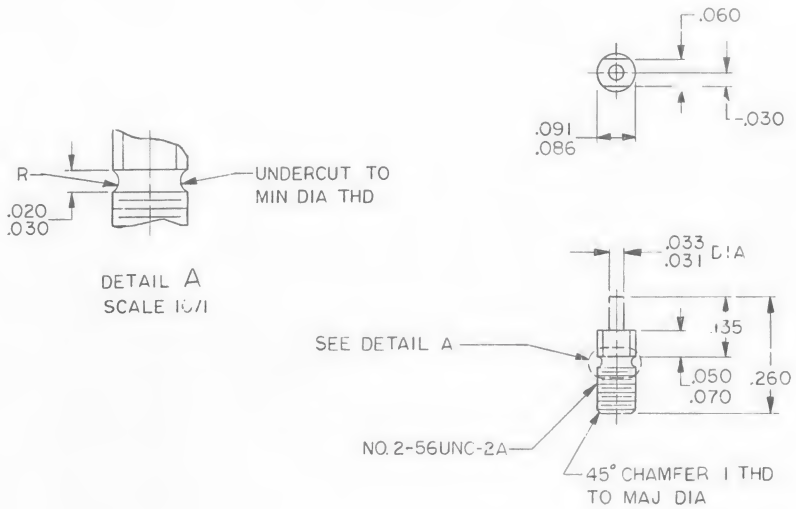

NOTES:

1. INTERPRET DRAWING IN ACCORDANCE WITH STANDARDS PRESCRIBED BY MIL-D-70327
2. MATERIAL: UNPLATED NICKEL IN ACCORDANCE WITH PS 1015400
3. SURFACE QUALITY: 125√ ALL OVER
4. REMOVE ALL BURRS AND BREAK SHARP EDGES .005/.015
5. IDENTIFY PER ND 1002019

QTY REQD	PART OR IDENTIFYING NO.	MATERIAL OR NOTES	NOMENCLATURE OR DESCRIPTION	FIND NO.

LIST OF MATERIALS

NEXT ASSY	USED ON
APPLICATION	

UNLESS OTHERWISE SPECIFIED
DIMENSIONS ARE IN INCHES
CAPACITOR VALUES ARE IN μf
RESISTOR VALUES ARE IN OHMS
TOLERANCES ON
FRACTIONS ±— DECIMALS ±.005 ANGLES ±—
DO NOT SCALE THIS DRAWING

MATERIAL
SEE NOTE 2

MIT INSTRUMENTATION LAB
CAMBRIDGE, MASS.

DRAWN	S Kaghan	14 JAN 65
CHECKED	R Boden	15 Jan 65
APPROVED	R M Kinsley	15 JAN 65
APPROVED	Eldon C Hall	22 Jan 65
APPROVED MIT	W Templer	26 Jan 65
APPROVED MSC	C Matty	1/22/65
DATE		

MANNED SPACECRAFT CENTER
HOUSTON, TEXAS

TERMINAL, THREADED

CODE IDENT NO.	SIZE	DRAWING NO.
—	C	2004039
SCALE 5/1	—	SHEET 1 OF 1

REVISIONS 17946					
SYM	ZONE	DESCRIPTION	DR	CHK	DATE	APPROVED

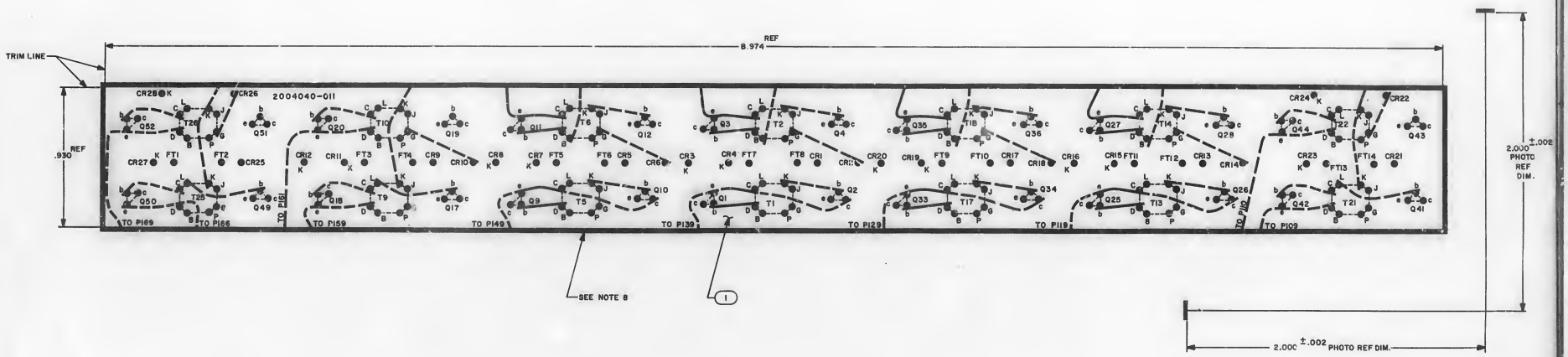

NOTES:

1. INTERPRET DRAWING IN ACCORDANCE WITH STANDARDS PRESCRIBED BY MIL-D-70327
2. MATERIAL: FILM .006/.008 THK SENSITIZED DIMENSIONALLY STABLE PER L-F-340, TYPE IB, CLASS 2, STYLE IA
3. ORIGINAL OF THIS DRAWING OR REPRODUCTION MADE BY A PROCESS OR METHOD SHALL INSURE DIMENSIONAL STABILITY
4. MAKE MASTER PATTERN POSITIVE FILMS TO DIMENSIONS SHOWN
5. CUT TO WITHIN .010 OF TRIM LINE
6. ⊕ .040/.050 DIA HOLE
7. BROKEN LINE DENOTES SLEEVING
8. APPLY FIND NO. 2 TO FAR SIDE OF FIND NO. 1

QTY REQD	PART OR IDENTIFYING NO.	NOMENCLATURE OR DESCRIPTION	FIND NO.
AR	1006316	ADHESIVE	2
1	2004040-001	INSULATOR A	1
-011			

LIST OF MATERIALS

2003026	
NEXT ASSY	USED ON
APPLICATION	

UNLESS OTHERWISE SPECIFIED DIMENSIONS ARE IN INCHES
CAPACITOR VALUES ARE IN μf
RESISTOR VALUES ARE IN OHMS
TOLERANCES ON
FRACTIONS ± — DECIMALS ± — ANGLES ± —
DO NOT SCALE THIS DRAWING

MATERIAL
SEE NOTE 2

MIT INSTRUMENTATION LAB
CAMBRIDGE, MASS.

MANNED SPACECRAFT CENTER
HOUSTON, TEXAS

DRAWN Jim Cory FEB 66
CHECKED
APPROVED
APPROVED
APPROVED MIT
APPROVED MSC
DATE

INSULATOR A ASSY PHOTOGRAPHIC MASTER

CURRENT SWITCH MODULE

CODE IDENT NO. —
SIZE E
DRAWING NO. 2004040
SCALE 4/1
SHEET 1 OF 1

REVISIONS						
SYM	ECP #	DESCRIPTION	DR	CHK	DATE	APPROVED

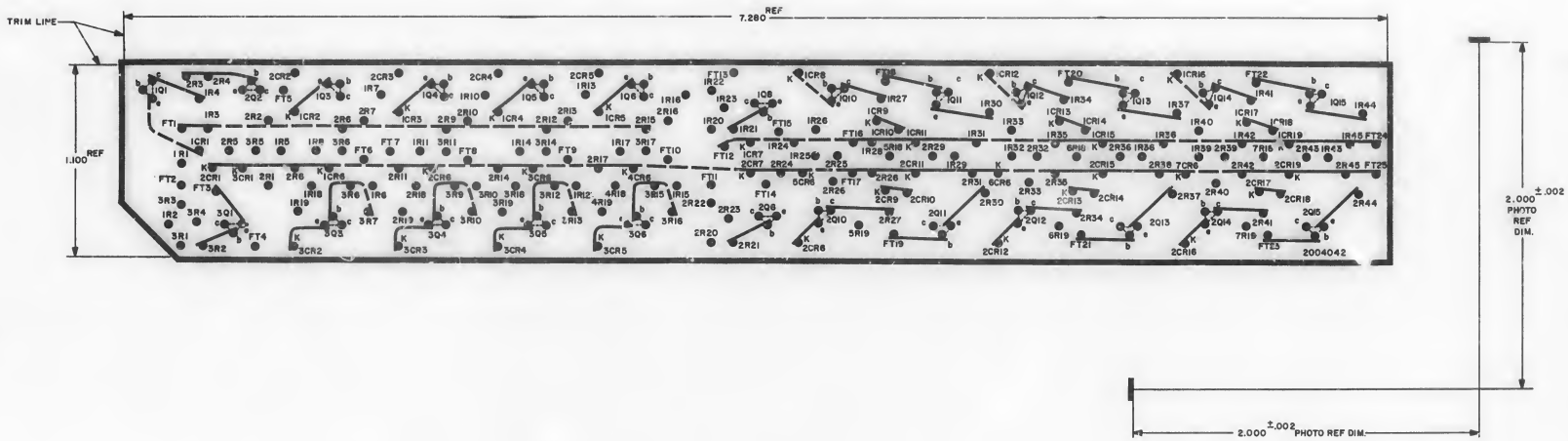

NOTES:

1. INTERPRET DRAWING IN ACCORDANCE WITH STANDARDS PRESCRIBED BY MIL-D-70327
2. MATERIAL: FILM .006/.008 THICK PER L-F-340, TYPE IB, CLASS B, STYLE IA
3. ORIGINAL OF THIS DRAWING OR REPRODUCTION MADE BY A PROCESS OR METHOD SHALL INSURE DIMENSIONAL STABILITY.
4. BROKEN LINE DENOTES SLEEVING
5. MAKE MASTER PATTERN POSITIVE FILM TO DIMENSIONS SHOWN
6. CUT TO WITHIN .010 OF TRIM LINE
7. ● .040/.050 DIA HOLE

QTY REQD	PART OR IDENTIFYING NO.	NOMENCLATURE OR DESCRIPTION	FIND NO
		LIST OF MATERIALS	

UNLESS OTHERWISE SPECIFIED
DIMENSION ARE IN INCHES
CAPACITOR VALUES ARE IN μf
RESISTOR VALUES ARE IN OHMS
TOLERANCES ON
FRACTIONS ± DECIMALS ± ANGLES ±
DO NOT SCALE THIS DRAWING

MATERIAL
SEE NOTE 2

NEXT ASSY	USED ON
2003027	

APPLICATION

MIT INSTRUMENTATION LAB
CAMBRIDGE, MASS.

MANNED SPACECRAFT CENTER
HOUSTON, TEXAS

DRAWN W.F. Tracy 11/22/66
CHECKED R.P. Kingsley 11/22/66
APPROVED J.P. Gordon 11/22/66
APPROVED Chas. E. Cook 11/22/66
APPROVED MIT 11/22/66
APPROVED MSC 11/22/66

INSULATOR A PHOTOGRAPHIC MASTER
STRAND SELECT MODULE

CODE IDENT NO. —
SIZE E
DRAWING NO. 2004042
SCALE 4/1
SHEET 1 OF 1

2004042

REVISIONS

RIM	ZONE	DESCRIPTION	DR	CHK	DATE	APPROVED

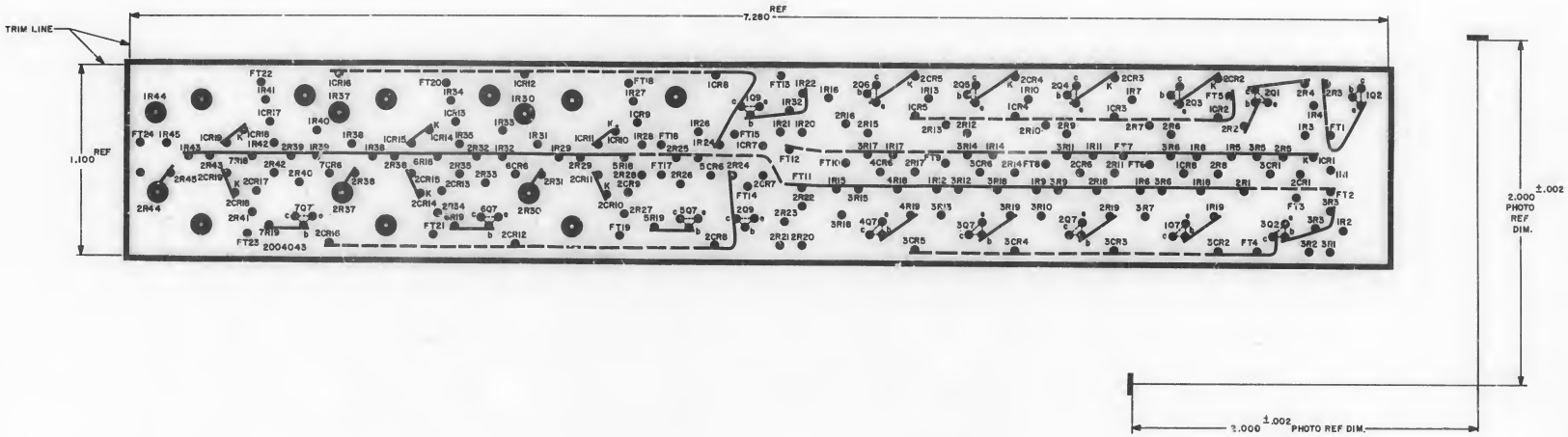

NOTES:

1. INTERPRET DRAWING IN ACCORDANCE WITH STANDARDS PRESCRIBED BY MIL-D-70327
2. MATERIAL: FILM .006/.008 THICK PER L-F-340, TYPE IB, CLASS 2, STYLE IA
3. ORIGINAL OF THIS DRAWING OR REPRODUCTION MADE BY A PROCESS OR METHOD SHALL INSURE DIMENSIONAL STABILITY.
4. MAKE MASTER PATTERN POSITIVE FILM TO DIMENSIONS SHOWN
5. CUT TO WITHIN .010 OF TRIM LINE
6. BROKEN LINE DENOTES SLEEVING
7. ● .040/.050 DIA HOLE
8. ● .111/.121 DIA HOLE

QTY REQD	PART OR IDENTIFYING NO	NOMENCLATURE OR DESCRIPTION	FIND NO.

LIST OF MATERIALS

UNLESS OTHERWISE SPECIFIED DIMENSIONS ARE IN INCHES
CAPACITOR VALUES ARE IN μf
RESISTOR VALUES ARE IN OHMS
TOLERANCES ON
FRACTIONS ± — DECIMALS ± — ANGLES ± —
DO NOT SCALE THIS DRAWING

MATERIAL: SEE NOTE 2

2003027 — NEXT ASSY — USED ON — APPLICATION

MIT INSTRUMENTATION LAB, CAMBRIDGE, MASS.

DRAWN K.W. Gray 1/21/66
CHECKED 1/26/66
APPROVED 2/1/66
APPROVED
APPROVED MIT 2-7-66
APPROVED MISC 2/1/66

MANNED SPACECRAFT CENTER, HOUSTON, TEXAS

INSULATOR B PHOTOGRAPHIC MASTER

STRAND SELECT MODULE

CODE IDENT NO. —
SIZE E
DRAWING NO. 2004043
DATE
SCALE 4/1
SHEET 1 OF 1

REVISIONS 19215						
SYM	ZONE	DESCRIPTION	DR	CHK	DATE	APPROVED

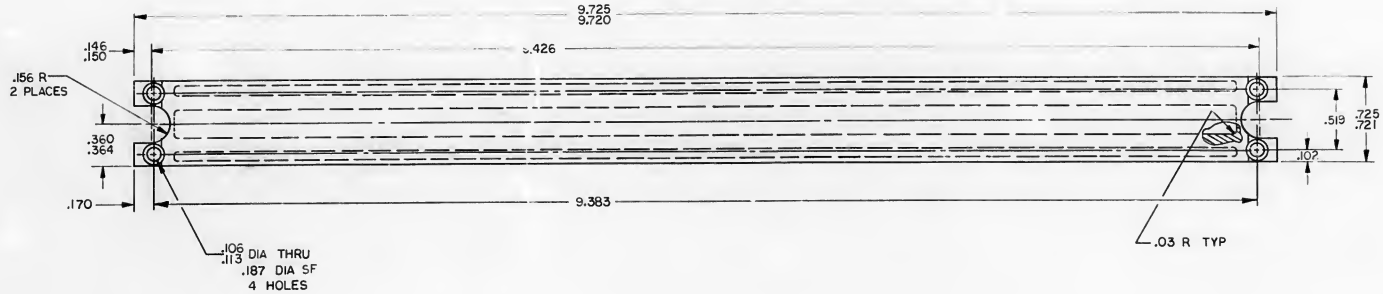

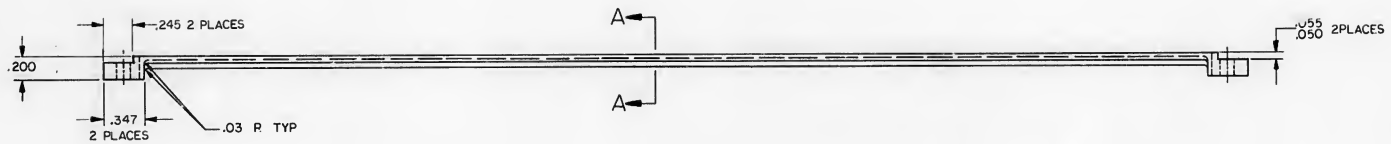

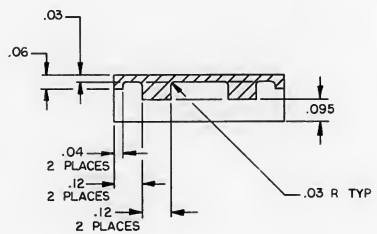

SECTION A-A
SCALE 4/1

NOTES:

1. INTERPRET DRAWING IN ACCORDANCE WITH STANDARDS PRESCRIBED BY MIL-D-70327
2. MATERIAL: MAGNESIUM ZK60A-T5 PER QQ-M-31, TEMP 5
3. FINISH: ANODIZE PER MIL-M-45202, TYPE I, CLASS C
4. REMOVE BURRS AND SHARP EDGES .005/.015
5. UNLESS OTHERWISE SPECIFIED ALL FILLETS AND RADII TO BE .020 MAX
6. ALL SURFACES 125√ UNLESS OTHERWISE SPECIFIED
7. IDENTIFY WITH DRAWING NO. AND REVISION PER ND1002019

QTY REQD	PART OR IDENTIFYING NO.	NOMENCLATURE OR DESCRIPTION	FIND NO.
		LIST OF MATERIALS	

2003043		UNLESS OTHERWISE SPECIFIED DIMENSIONS ARE IN INCHES CAPACITOR VALUES ARE IN μf RESISTOR VALUES ARE IN OHMS TOLERANCES ON FRACTIONS ± — DECIMALS XX ± — XXX ± .005 ANGLES ± — DO NOT SCALE THIS DRAWING	MIT INSTRUMENTATION LAB CAMBRIDGE, MASS
NEXT ASSY	USED ON	MATERIAL SEE NOTE 2	MANNED SPACECRAFT CENTER HOUSTON, TEXAS
APPLICATION			DRAWN 9 Feb 65 / CHECKED 9 Feb 65 / APPROVED 13 Feb 65 / APPROVED 17 Feb 65

COVER
SENSE AMPLIFIER MODULE

APPROVED MIT	17 May 65	CODE IDENT NO. 80230	SIZE D	DRAWING NO. 2004044
APPROVED MSC	7/10/65	DATE	SCALE 2/1	SHEET 1 OF 1

REVISIONS 12683						
SYM	ZONE	DESCRIPTION	DR	CHK	DATE	APPROVED

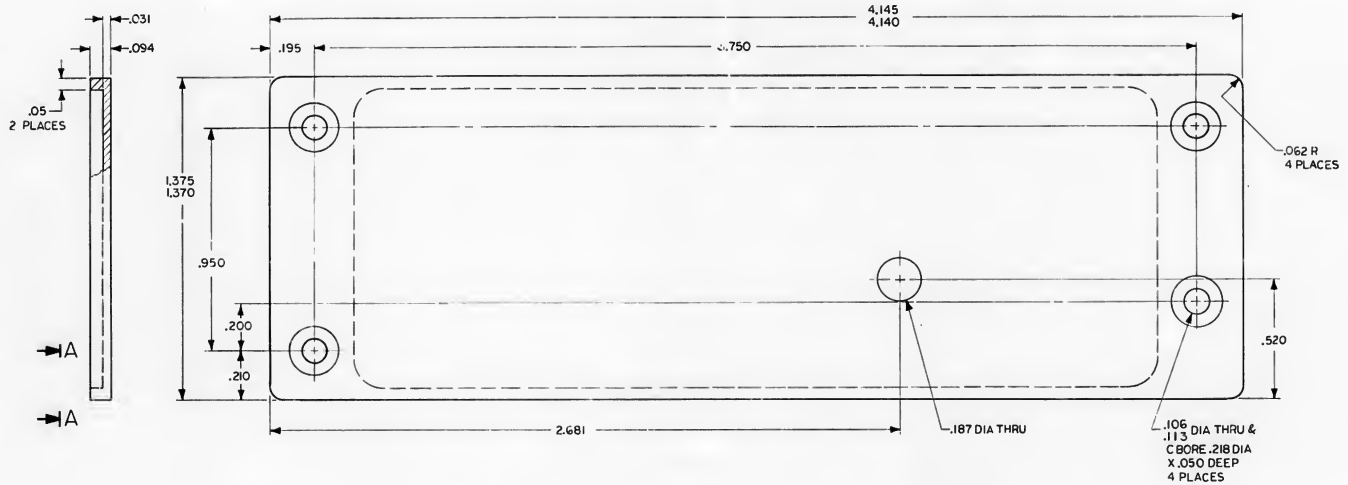

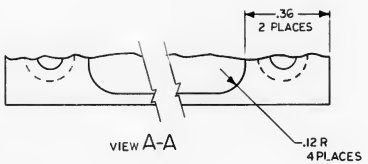

NOTES

1. INTERPRET DRAWING IN ACCORDANCE WITH STANDARDS PRESCRIBED BY MIL-D-70327
2. MATERIAL: MAGNESIUM ZK60A-T5 PER MIL-M-31 TEMP 5
3. REMOVE BURRS AND SHARP EDGES .005/.015
4. FINISH: ANODIZE PER MIL-M-45202, TYPE I, CLASS C
5. ALL SURFACES 125√
6. UNLESS OTHERWISE SPECIFIED ALL FILLETS AND RADIOS TO BE .010 MAX
7. IDENTIFY WITH DRAWING NO. AND REVISION PER ND1002019

QTY REQD	PART OR IDENTIFYING NO.	NOMENCLATURE OR DESCRIPTION	FIND NO.

LIST OF MATERIALS

2003036	
NEXT ASSY	USED ON
APPLICATION	

UNLESS OTHERWISE SPECIFIED DIMENSIONS ARE IN INCHES CAPACITOR VALUES ARE IN μf RESISTOR VALUES ARE IN OHMS TOLERANCES ON FRACTIONS ± — DECIMALS .XX ±.01 .XXX ±.005 ANGLES ± — DO NOT SCALE THIS DRAWING

MATERIAL

SEE NOTE 2

MIT INSTRUMENTATION LAB CAMBRIDGE, MASS

DRAWN	Tom Williams	9 NOV 65
CHECKED	[illegible]	10 NOV 65
APPROVED	[illegible]	2-12-65
APPROVED	[illegible]	23 Apr 65
APPROVED MIT	[illegible]	27 Apr 65
APPROVED MSC	[illegible]	4-22-65
	DATE	

MANNED SPACECRAFT CENTER
HOUSTON, TEXAS

COVER A
OSCILLATOR MODULE

CODE IDENT NO.	SIZE	DRAWING NO.
—	D	2004061
	SCALE 4/1	SHEET 1 OF 1

REVISIONS 12183

SYM	ZONE	DESCRIPTION	DR	CHK	DATE	APPROVED

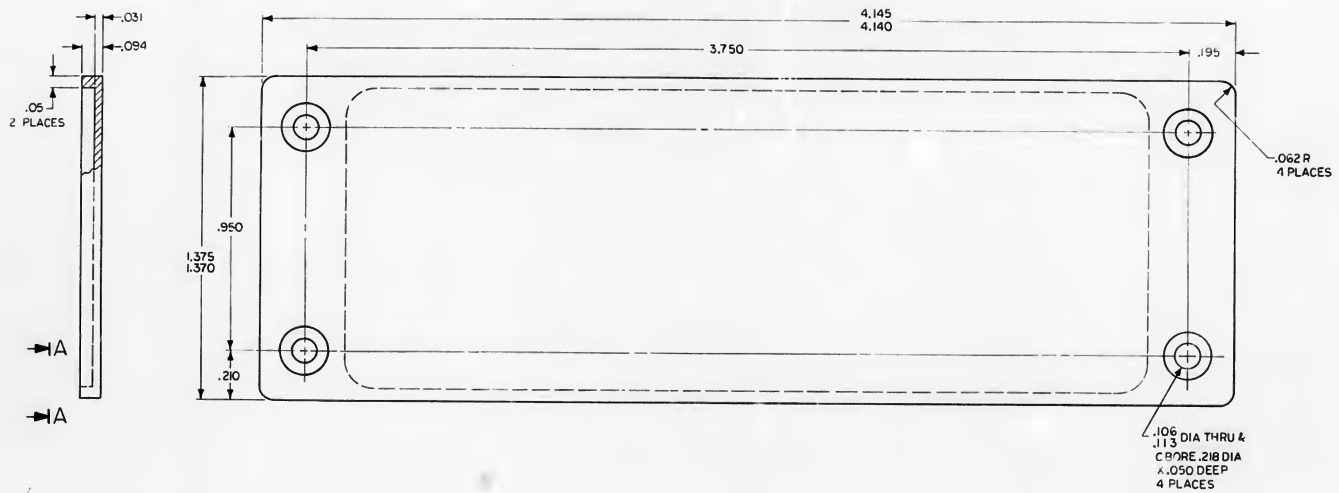

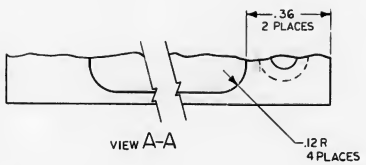

NOTES

1. INTERPRET DRAWING IN ACCORDANCE WITH STANDARDS PRESCRIBED BY MIL-D-70327
2. MATERIAL: MAGNESIUM ZK60A-T5 PER MIL-M-31 TEMP 5
3. REMOVE BURRS AND SHARP EDGES .005/.015
4. FINISH: ANODIZE PER MIL-M-45202, TYPE I, CLASS C
5. ALL SURFACES 125√
6. UNLESS OTHERWISE SPECIFIED ALL FILLETS AND RADII TO BE .010 MAX
7. IDENTIFY WITH DRAWING NO. AND REVISION PER ND1002019

QTY REQD	PART OR IDENTIFYING NO.	NOMENCLATURE OR DESCRIPTION	FIND NO.

LIST OF MATERIALS

2003036	
NEXT ASSY	USED ON
APPLICATION	

UNLESS OTHERWISE SPECIFIED DIMENSIONS ARE IN INCHES CAPACITOR VALUES ARE IN μf RESISTOR VALUES ARE IN OHMS TOLERANCES ON FRACTIONS ± —— DECIMALS .XX ± .005 ANGLES ± —— DO NOT SCALE THIS DRAWING

MATERIAL

SEE NOTE 2

MIT INSTRUMENTATION LAB
CAMBRIDGE, MASS.

MANNED SPACECRAFT CENTER
HOUSTON, TEXAS

DRAWN Tom Keller 4 MAR 65
CHECKED 25 MAR 65
APPROVED 5-17-65
APPROVED 22 APR 65
APPROVED MIT 27 APR 65
APPROVED MSC 4-27-65
DATE

COVER B
OSCILLATOR MODULE

CODE IDENT NO. ——
SIZE D
DRAWING NO. 2004062
SCALE 4/1
SHEET 1 OF 1

REVISIONS 20043						
SYM	ZONE	DESCRIPTION	DR	CHK	DATE	APPROVED

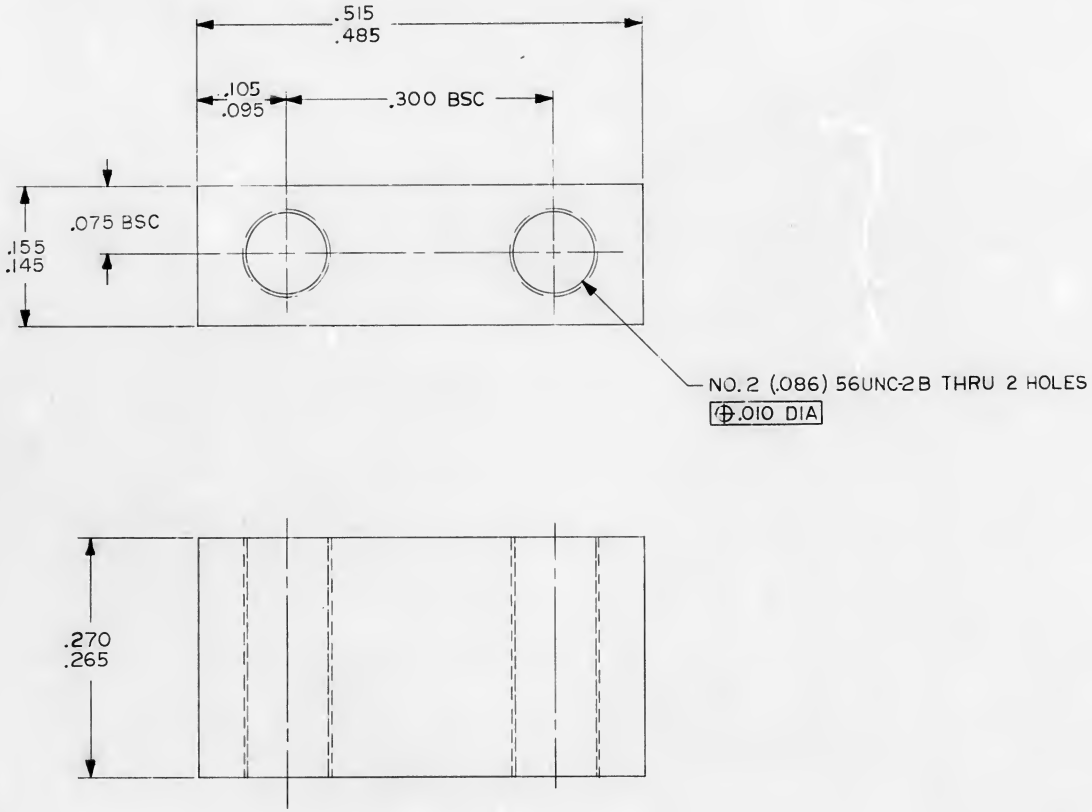

NOTES:

1. INTERPRET DRAWING IN ACCORDANCE WITH STANDARDS PRESCRIBED BY MIL-D-70327.
2. MATERIAL: 6061-T6-AL PER QQ-A-250/11, TEMP 6
3. FINISH: ANODIZE PER MIL-A-8625 TYPE II CLEAR
4. REMOVE BURRS AND SHARP EDGES .005/.015
5. ALL SURFACES 125
6. IDENTIFY WITH DRAWING NO AND REVISION PER ND 1002019

QTY REQD	PART OR IDENTIFYING NO.	NOMENCLATURE OR DESCRIPTION	FIND NO.

LIST OF MATERIALS

2003053	
NEXT ASSY	USED ON
APPLICATION	

UNLESS OTHERWISE SPECIFIED
DIMENSIONS ARE IN INCHES
CAPACITOR VALUES ARE IN μf
RESISTOR VALUES ARE IN OHMS
TOLERANCES ON
FRACTIONS ± — DECIMALS ± — ANGLES ± —
DO NOT SCALE THIS DRAWING

MATERIAL

SEE NOTE 2

MIT INSTRUMENTATION LAB
CAMBRIDGE, MASS.

MANNED SPACECRAFT CENTER
HOUSTON, TEXAS

DRAWN	Richard Jones	10 MAR 65
CHECKED	[illegible]	21 MAY 65
APPROVED	[illegible]	27 MAY 65
APPROVED	[illegible]	3 JUN 65
APPROVED MIT	[illegible]	8/6/65
APPROVED MSC	[illegible]	6/4/65

DATE

STANDOFF
FIXED MEMORY MODULE

CODE IDENT NO.	SIZE	DRAWING NO.
80230	C	2004071

SCALE 10/1 SHEET 1 OF 1

REVISIONS 2004			
SYM	DESCRIPTION	DATE	APPROVAL

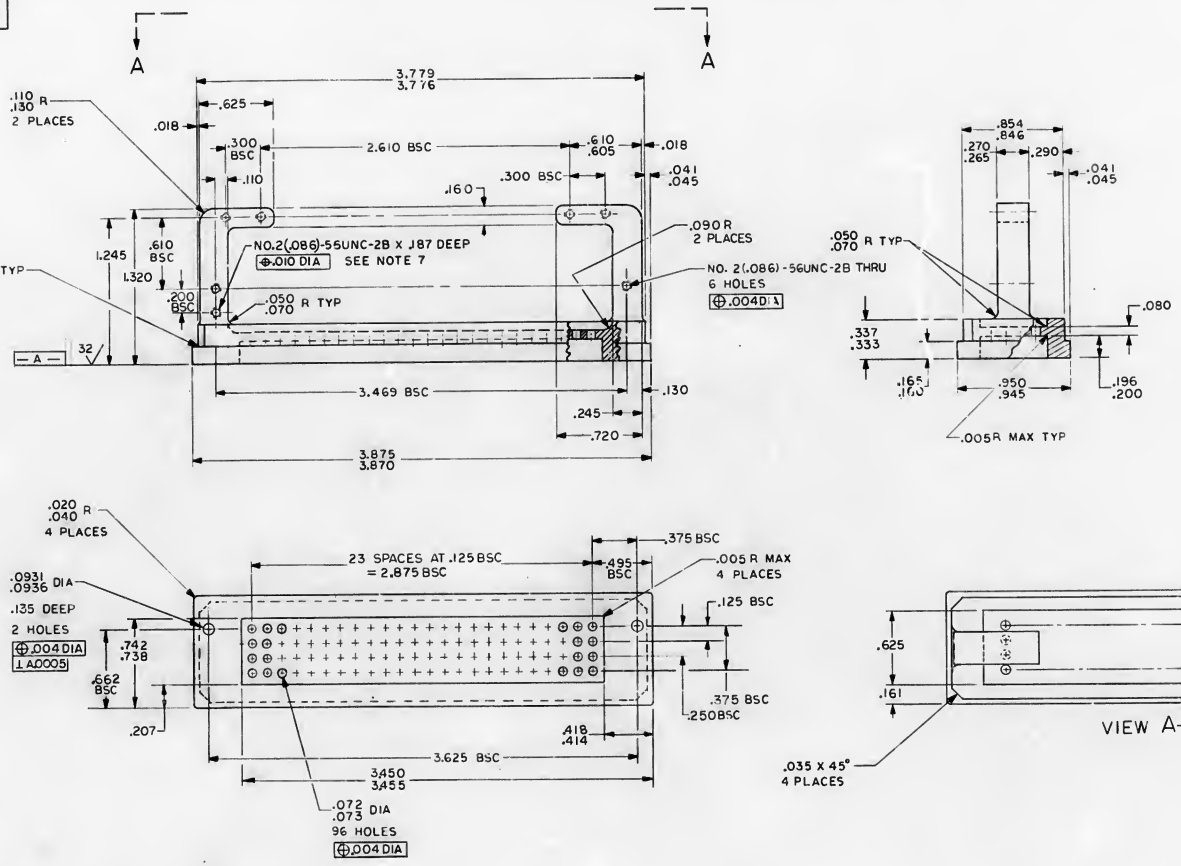

NOTES:

1. INTERPRET DRAWING IN ACCORDANCE WITH STANDARDS PRESCRIBED BY MIL-D-70327
2. MATERIAL: 6061-T6-AL PER QQ-A-250/11 TEMP 6
3. ALL SURFACES 125/ UNLESS OTHERWISE SPECIFIED
4. REMOVE BURRS AND SHARP EDGES .005/.015
5. CHROMATE PER MIL-C-5541, TYPE II, GRADE C, CLASS 3
6. IDENTIF. WITH DRAWING NO. AND REVISION PER ND1002019
7. TAP HOLE AFTER CHROMATE FINISH

QTY REQD	PART OR IDENTIFYING NO.	NOMENCLATURE OR DESCRIPTION	FIND NO.

LIST OF MATERIALS

2003046	
NEXT ASSY	USED ON
APPLICATION	

UNLESS OTHERWISE SPECIFIED
DIMENSIONS ARE IN INCHES
TOLERANCES ON
FRACTIONS ± — DECIMALS ±.005 ANGLES ± 2°
DO NOT SCALE THIS DRAWING
MATERIAL: SEE NOTE 2
HEAT TREATMENT: —
FINAL FINISH: SEE NOTE 5

MIT INSTRUMENTATION LAB
CAMBRIDGE MASS
DWG NO CONTRACT

DRAWN DATE
CHECKED
APPROVAL
APPROVAL
NASA APPROVAL
MIT APPROVAL

MANNED SPACECRAFT CENTER
HOUSTON, TEXAS

CONNECTOR PLATE
FIXED MEMORY MODULE

CODE IDENT NO.	SIZE	NASA DRAWING NO.
80230	D	2004075
SCALE 2/1	WT	SHEET 1 OF 1

REVISIONS 11758

SYM	ZONE	DESCRIPTION	DR	CHK	DATE	APPROVED
A		REVISED PER TDRR 20951	KEH	RPL	11 Aug 65	

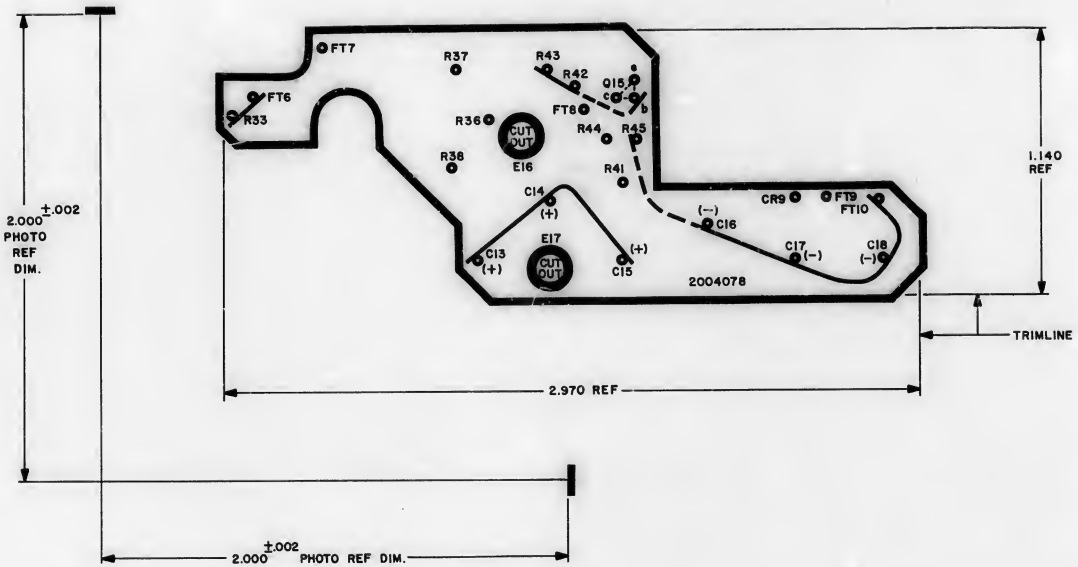

NOTES

1. INTERPRET DRAWING IN ACCORDANCE WITH STANDARDS PRESCRIBED BY MIL-D-70327
2. ORIGINAL OF THIS DRAWING OR REPRODUCTION MADE BY A PROCESS OR METHOD SHALL INSURE DIMENSIONAL STABILITY
3. CUT TO WITHIN .010 OF TRIMLINE
4. MAKE MASTER PATTERN POSITIVE FILM TO DIMENSIONS SHOWN
5. MATERIAL: FILM .006/.008 THK SENSITIZED DIMENSIONALLY STABLE PER L-F-340, TYPE IB, CLASS 2, STYLE IA
6. ⊙ .040/.050 DIA HOLE
7. BROKEN LINE DENOTES SLEEVING
8. ○ .20/.22 DIA HOLE

QTY REQD	PART OR IDENTIFYING NO.	NOMENCLATURE OR DESCRIPTION	FIND NO.

LIST OF MATERIALS

2003056	
NEXT ASSY	USED ON
APPLICATION	

UNLESS OTHERWISE SPECIFIED DIMENSIONS ARE IN INCHES
CAPACITOR VALUES ARE IN μf
RESISTOR VALUES ARE IN OHMS
TOLERANCES ON
FRACTIONS ± DECIMALS ± ANGLES ±
DO NOT SCALE THIS DRAWING

MATERIAL

SEE NOTE 5

MIT INSTRUMENTATION LAB
CAMBRIDGE, MASS.

MANNED SPACECRAFT CENTER
HOUSTON, TEXAS

DRAWN Ed Powers 23 Aug 65
CHECKED 24 Aug 65
APPROVED 31 Aug 65
APPROVED 15 Sep 65

INSULATOR C PHOTOGRAPHIC MASTER
POWER SUPPLY

APPROVED MIT 6-2-65
APPROVED MSC 6-6-65
DATE

CODE IDENT NO. 80230 | SIZE D | DRAWING NO. 2004078

SCALE 4/1 | SHEET | OF 1

2004078

REVISIONS 19758

SYM	ZONE	DESCRIPTION	DR	CHK	DATE	APPROVED
A		REVISED PER TDRR 20951	EP	EAR	10 AUG 65	[illegible]

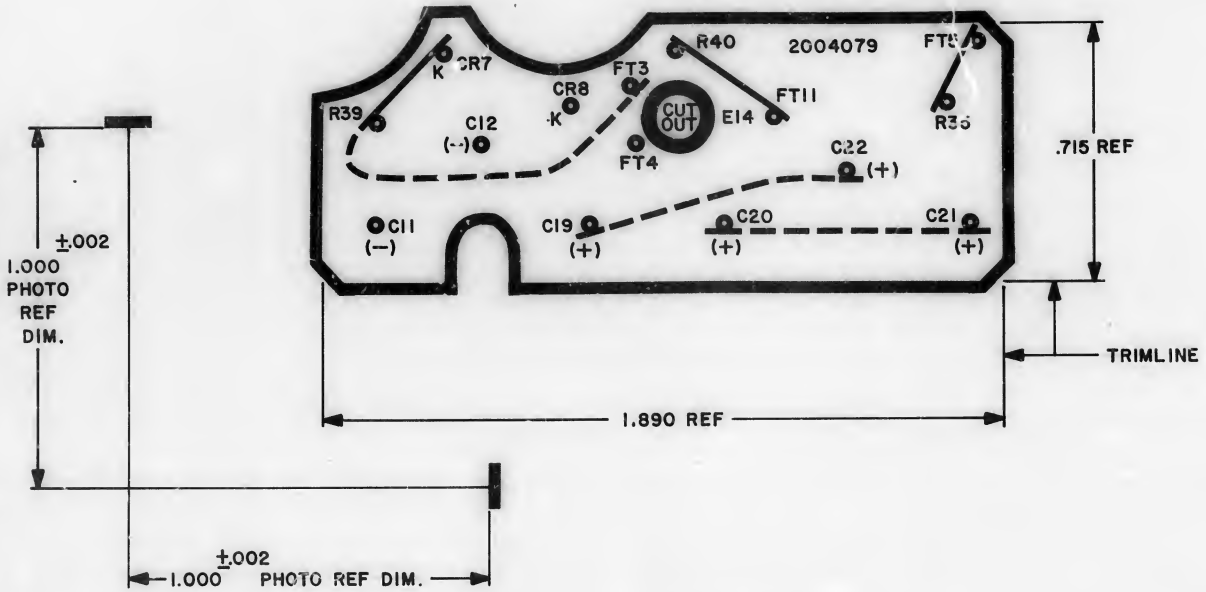

NOTES

1. INTERPRET DRAWING IN ACCORDANCE WITH STANDARDS PRESCRIBED BY MIL-D-70327
2. ORIGINAL OF THIS DRAWING OR REPRODUCTION MADE BY A PROCESS OR METHOD SHALL INSURE DIMENSIONAL STABILITY
3. CUT TO WITHIN .010 OF TRIMLINE
4. MAKE MASTER PATTERN POSITIVE FILM TO DIMENSIONS SHOWN
5. BROKEN LINE DENOTES SLEEVING
6. MATERIAL: FILM .006/.008 THK SENSITIZED DIMENSIONALLY STABLE PER L-F-340, TYPE IB, CLASS 2, STYLE IA
7. ● .040/.050 DIA HOLE
8. ○ .20/.22 DIA HOLE

NEXT ASSY	USED ON
2003056	
APPLICATION	

UNLESS OTHERWISE SPECIFIED
DIMENSIONS ARE IN INCHES
CAPACITOR VALUES ARE IN μf
RESISTOR VALUES ARE IN OHMS
TOLERANCES ON
FRACTIONS ± ——— DECIMALS ± ——— ANGLES ± ———
DO NOT SCALE THIS DRAWING

MATERIAL

SEE NOTE 6

QTY REQD	PART OR IDENTIFYING NO.	NOMENCLATURE OR DESCRIPTION	FIND NO.

LIST OF MATERIALS

MIT INSTRUMENTATION LAB
CAMBRIDGE, MASS.

MANNED SPACECRAFT CENTER
HOUSTON, TEXAS

DRAWN	Ed Powers	22 Apr 65
CHECKED	D. Lindstrom	26 May 65
APPROVED	[illegible]	26 May 65
APPROVED	Eldon C. Hall	1 Sept 65
APPROVED MIT	[illegible]	6-2-65
APPROVED MSC	[illegible]	6-2-65

DATE

INSULATOR D PHOTOGRAPHIC MASTER POWER SUPPLY

CODE IDENT NO.	SIZE	DRAWING NO.
80230	C	2004079

SCALE 4/1 SHEET 1 OF 1

2004079

REVISIONS 1975 R						
SYM	ZONE	DESCRIPTION	DR	CHK	DATE	APPROVED
A		REVISED PER TDRR 20951	RCH	RPK	9-24-65	[illegible]

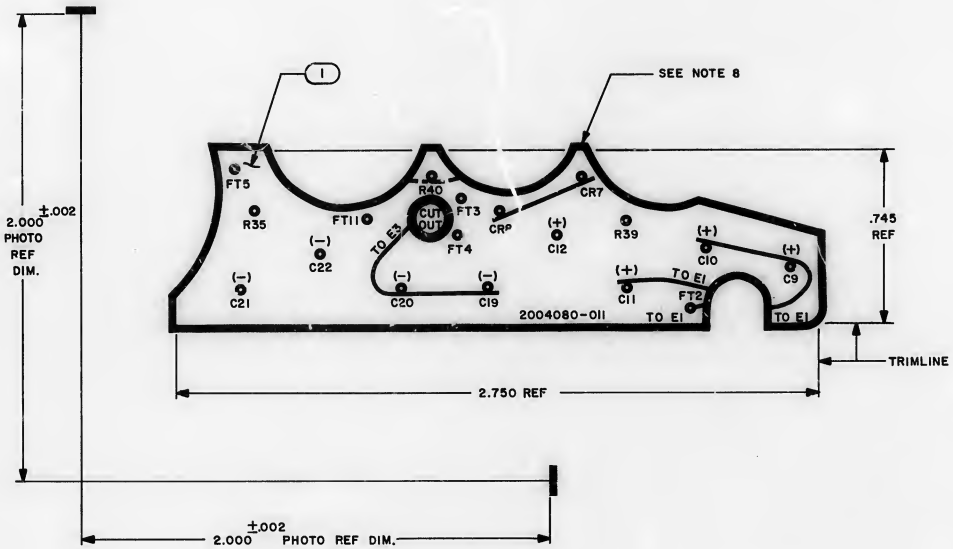

NOTES

1. INTERPRET DRAWING IN ACCORDANCE WITH STANDARDS PRESCRIBED BY MIL-D-70327
2. ORIGINAL OF THIS DRAWING OR REPRODUCTION MADE BY A PROCESS OR METHOD SHALL INSURE DIMENSIONAL STABILITY
3. CUT TO WITHIN .010 OF TRIMLINE
4. MAKE MASTER PATTERN POSITIVE FILM TO DIMENSIONS SHOWN
5. MATERIAL: FILM .006/.008 THK SENSITIZED DIMENSIONALLY STABLE PER L-F-340, TYPE IB, CLASS 2, STYLE IA
6. ● .040/.050 DIA HOLE
7. BROKEN LINE DENOTES SLEEVING
8. APPLY FIND NO. 2 TO FAR SIDE OF FIND NO. 1
9. ◯ .20/.22 DIA HOLE
10. AR DENOTES AS REQUIRED

QTY REQD	PART OR IDENTIFYING NO.	NOMENCLATURE OR DESCRIPTION	FIND NO.
AR	1006318	ADHESIVE	2
1	2004080-001	INSULATOR A	1
-011		LIST OF MATERIALS	

2003056	
NEXT ASSY	USED ON
APPLICATION	

UNLESS OTHERWISE SPECIFIED DIMENSIONS ARE IN INCHES
CAPACITOR VALUES ARE IN μf
RESISTOR VALUES ARE IN OHMS
TOLERANCES ON
FRACTIONS ± DECIMALS ± ANGLES ±
DO NOT SCALE THIS DRAWING

MATERIAL: SEE NOTE 5

MIT INSTRUMENTATION LAB, CAMBRIDGE, MASS.

MANNED SPACECRAFT CENTER, HOUSTON, TEXAS

DRAWN Ed Powers 8-24-65
CHECKED R. Bradshaw 8-24-65
APPROVED [illegible] 8-24-65
APPROVED [illegible] 8-24-65
APPROVED MIT [illegible] 8-24-65
APPROVED MSC [illegible] 8-24-65

INSULATOR A
PHOTOGRAPHIC MASTER
POWER SUPPLY

CODE IDENT NO. 80230 | SIZE D | DRAWING NO. 2004080

DATE | SCALE 4/1 | SHEET 1 OF 1

REVISIONS 19757

SYM	ZONE	DESCRIPTION	DR	CHK	DATE	APPROVED
A		REVISED PER TDRR 20951	KCH	EPR	2 Aug 65	
B		REVISED PER TDRR 22564	MPH	EPR		
C		REVISED PER TDRR 24192	MPH	EPR	22 Nov 65	

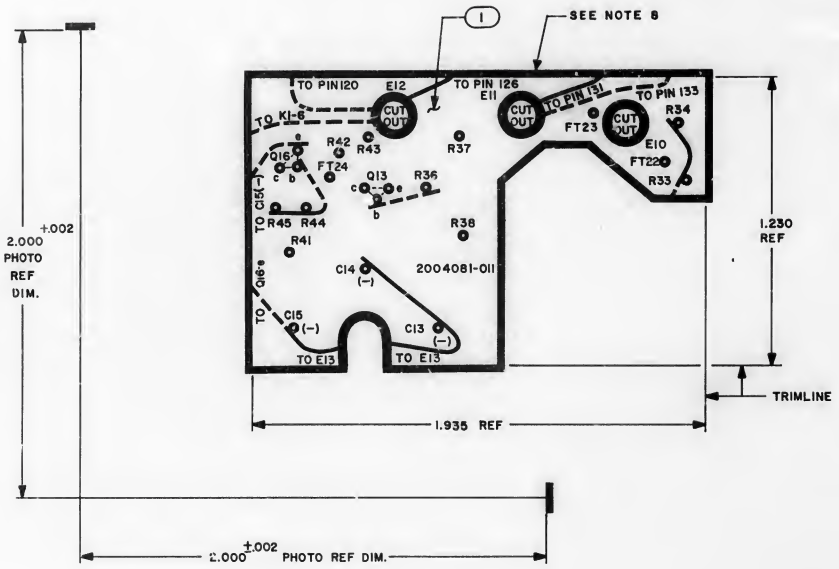

NOTES

1. INTERPRET DRAWING IN ACCORDANCE WITH STANDARDS PRESCRIBED BY MIL-D-70327
2. ORIGINAL OF THIS DRAWING OR REPRODUCTION MADE BY A PROCESS OR METHOD SHALL INSURE DIMENSIONAL STABILITY
3. CUT TO WITHIN .010 OF TRIMLINE
4. BROKEN LINE DENOTES SLEEVING
5. MAKE MASTER PATTERN POSITIVE FILM TO DIMENSIONS SHOWN
6. MATERIAL: .006/.008 THK SENSITIZED DIMENSIONALLY STABLE PER L-F-340, TYPE IB, CLASS 2, STYLE IA
7. ⊙ .040/.050 DIA HOLE
8. APPLY FIND NO. 2 TO FAR SIDE OF FIND NO. 1
9. ○ .20/.22 DIA HOLE
10. AR DENOTES AS REQUIRED

QTY REQD	PART OR IDENTIFYING NO.	NOMENCLATURE OR DESCRIPTION	FIND NO.
AR	1006318	ADHESIVE	2
1	2004081-001	INSULATOR B	1
-011			

LIST OF MATERIALS

2003056	
NEXT ASSY	USED ON
APPLICATION	

UNLESS OTHERWISE SPECIFIED DIMENSIONS ARE IN INCHES CAPACITOR VALUES ARE IN μf RESISTOR VALUES ARE IN OHMS TOLERANCES ON FRACTIONS ± DECIMALS ± ANGLES ±
DO NOT SCALE THIS DRAWING
MATERIAL
SEE NOTE 6

MIT INSTRUMENTATION LAB
CAMBRIDGE, MASS.

MANNED SPACECRAFT CENTER
HOUSTON, TEXAS

DRAWN Ed Powers 28 Apr 65
CHECKED
APPROVED
APPROVED
APPROVED MIT 6-2-65
APPROVED MSC 6-2-65

INSULATOR B
PHOTOGRAPHIC MASTER
POWER SUPPLY

CODE IDENT NO.	SIZE	DRAWING NO.
80230	D	2004081

SCALE 4/1 SHEET 1 OF 1

REVISIONS 17215					
SYM	ZONE	DESCRIPTION	DR	CHK	DATE	APPROVED
A		REVISED PER TORR 20042				

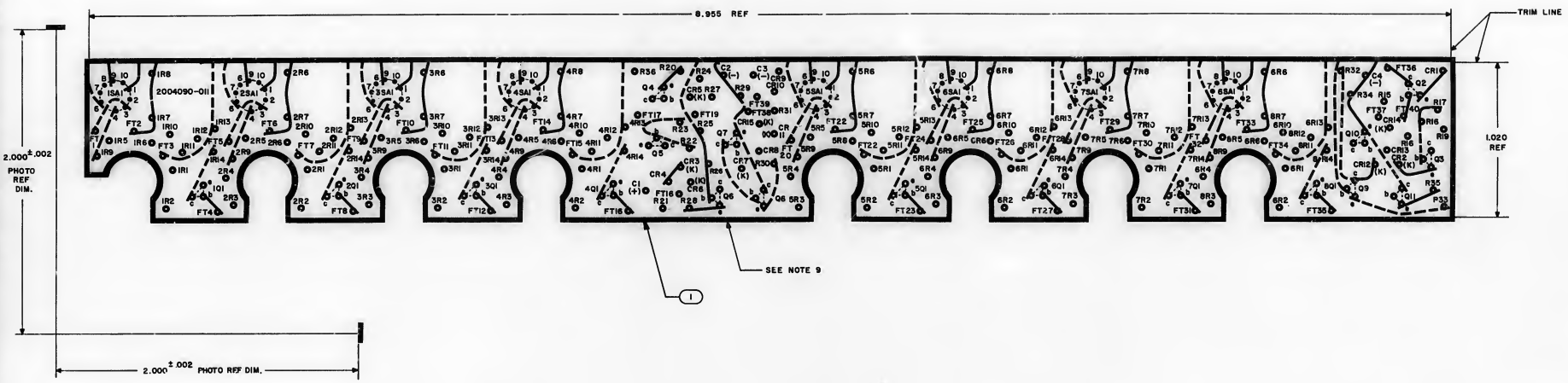

NOTES:

1. INTERPRET DRAWING IN ACCORDANCE WITH STANDARDS PRESCRIBED BY MIL-D-70327
2. MATERIAL: FILM .006/.008 THICK SENSITIZED DIMENSIONALLY STABLE PER L-F-340 TYPE IB, CLASS 2, STYLE IA
3. ORIGINAL OF THIS DRAWING OR REPRODUCTION MADE BY A PROCESS OR METHOD SHALL INSURE DIMENSIONAL STABILITY
4. MAKE MASTER PATTERN POSITIVE FILMS TO DIMENSIONS SHOWN
5. CUT TO WITHIN .010 OF TRIMLINE
6. BROKEN LINE DENOTES SLEEVING
7. ⊙ .040/.050 DIA HOLE
8. ● .030/.035 DIA HOLE (1SA1 THRU 8SA1 ONLY)
9. APPLY FIND NO.2 TO FAR SIDE OF FIND NO.1

QTY REQD	PART OR IDENTIFYING NO.	NOMENCLATURE OR DESCRIPTION	FIND NO.
AR	1006316	ADHESIVE	2
1	2004090-001	INSULATOR A	1
-011			

LIST OF MATERIALS

UNLESS OTHERWISE SPECIFIED DIMENSIONS ARE IN INCHES
CAPACITOR VALUES ARE IN μf
RESISTOR VALUES ARE IN OHMS
TOLERANCES ON
FRACTIONS ± DECIMALS ± ANGLES ±
DO NOT SCALE THIS DRAWING

MATERIAL: SEE NOTE 2

2003043 NEXT ASSY | USEC ON
APPLICATION

MIT INSTRUMENTATION LAB
CAMBRIDGE, MASS.

DRAWN: 4/1/6
CHECKED: CHECKED
APPROVED: MIT
APPROVED: MSC
APPROVED: MIT
APPROVED: MSC
DATE

MANNED SPACECRAFT CENTER
HOUSTON, TEXAS

INSULATOR A, ASSY
PHOTOGRAPHIC MASTER
SENSE AMPLIFIER MODULE

CODE IDENT NO. 80230 | SIZE E | DRAWING NO. 2004090

SCALE 4/1 | SHEET 1 OF 1

REVISIONS						
SYM	ZONE	DESCRIPTION	DR	CHK	DATE	APPROVED

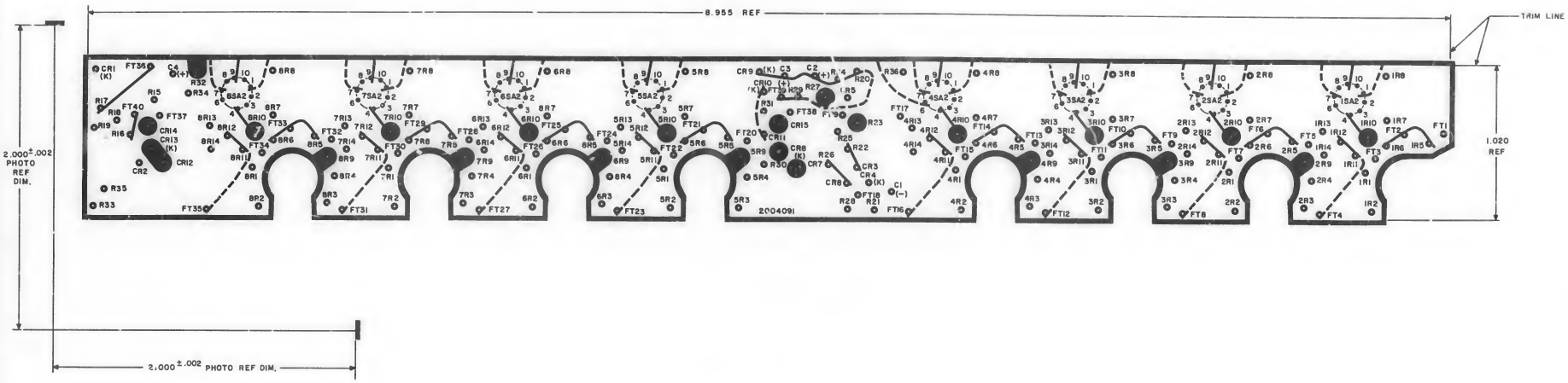

NOTES:

1. INTERPRET DRAWING IN ACCORDANCE WITH STANDARDS PRESCRIBED BY MIL-D-70327
2. MATERIAL: FILM .006/.008 THICK SENSITIZED DIMENSIONALLY STABLE PER L-F-340 TYPE IB, CLASS 2, STYLE IA
3. ORIGINAL OF THIS DRAWING OR REPRODUCTION MADE BY A PROCESS OR METHOD SHALL INSURE DIMENSIONAL STABILITY
4. MAKE MASTER PATTERN POSITIVE FILMS TO DIMENSIONS SHOWN
5. CUT TO WITHIN .010 OF TRIMLINE
6. BROKEN LINE DENOTES SLEEVING
7. ⊙ .040/.050 DIA HOLE
8. ● .030/.035 DIA HOLE (1SA2 THRU 8SA2 ONLY)
9. ● .120/.130 DIA HOLE (14 PLACES)

QTY REQD	PART OR IDENTIFYING NO	NOMENCLATURE OR DESCRIPTION	FIND NO

LIST OF MATERIALS

2003043		
NEXT ASSY	USED ON	
APPLICATION		

UNLESS OTHERWISE SPECIFIED DIMENSIONS ARE IN INCHES
CAPACITOR VALUES ARE IN μf
RESISTOR VALUES ARE IN OHMS
TOLERANCES ON
FRACTIONS ± — DECIMALS ± — ANGLES ± —
DO NOT SCALE THIS DRAWING

MATERIAL: SEE NOTE 2

MIT INSTRUMENTATION LAB, CAMBRIDGE MASS

MANN'D SPACECRAFT CENTER, HOUSTON TEXAS

DRAWN 4/4/66
CHECKED 4/4/66
APPROVED 4/11/66
APPROVED 4/11/66
APPROVED MIT 4/11/66
APPROVED MSC 4/11/66

INSULATOR B PHOTOGRAPHIC MASTER

SENSE AMPLIFIER MODULE

CODE IDENT NO 80230 | SIZE E | DRAWING NO 2004091

SCALE 4/1 | SHEET 1 OF 1

2004091

REVISIONS 19687						
SYM	ZONE	DESCRIPTION	DR	CHK	DATE	APPROVED

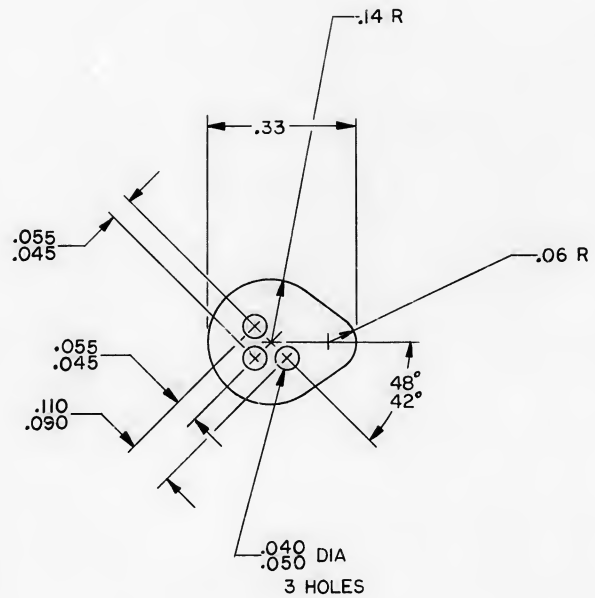

NOTES

1. INTERPRET DRAWING IN ACCORDANCE WITH STANDARDS PRESCRIBED BY MIL–D–70327
2. MATERIAL: FILM, .006/.008 THICK, POLYETHYLENE TEREPHTHALATE PER L-P-00519, TYPE II, CLASS I
3. IDENTIFY WITH DRAWING NO. AND REVISION PER ND1002019

QTY REQD	PART OR IDENTIFYING NO.	NOMENCLATURE OR DESCRIPTION	FIN NO

LIST OF MATERIALS

2003035	
NEXT ASSY	USED ON
APPLICATION	

UNLESS OTHERWISE SPECIFIED DIMENSIONS ARE IN INCHES
CAPACITOR VALUES ARE IN μf
RESISTOR VALUES ARE IN OHMS
TOLERANCES ON
FRACTIONS ± —— DECIMALS ±.01 ANGLES ± —
DO NOT SCALE THIS DRAWING

MATERIAL

SEE NOTE 2

MIT INSTRUMENTATION LAB
CAMBRIDGE, MASS.

MANNED SPACECRAFT CENTER
HOUSTON, TEXAS

DRAWN	A. J. Pappas	13 Apr 65
CHECKED	R. L. Bingaman	21 Apr 65
APPROVED	[illegible]	21 Apr 65
APPROVED	Fred M. Hall	24 May 65
APPROVED MIT	W. Kupfer	26 May 65
APPROVED MSC	[illegible]	5/24/65

DATE

INSULATOR

CODE IDENT NO.	SIZE	DRAWING NO.
80230	C	2004092

SCALE 5/1 SHEET 1 OF 1

MASTER

REVISIONS 20443						
SYM	ZONE	DESCRIPTION	DR	CHK	DATE	APPROVED
A		REVISED PER TDRR 20617				
B		REVISED PER TDRR 21340				
C		REVISED PER TDRR 24670				
D		REVISED PER TDRR 25774				
E		REVISED PER TDRR 30050				

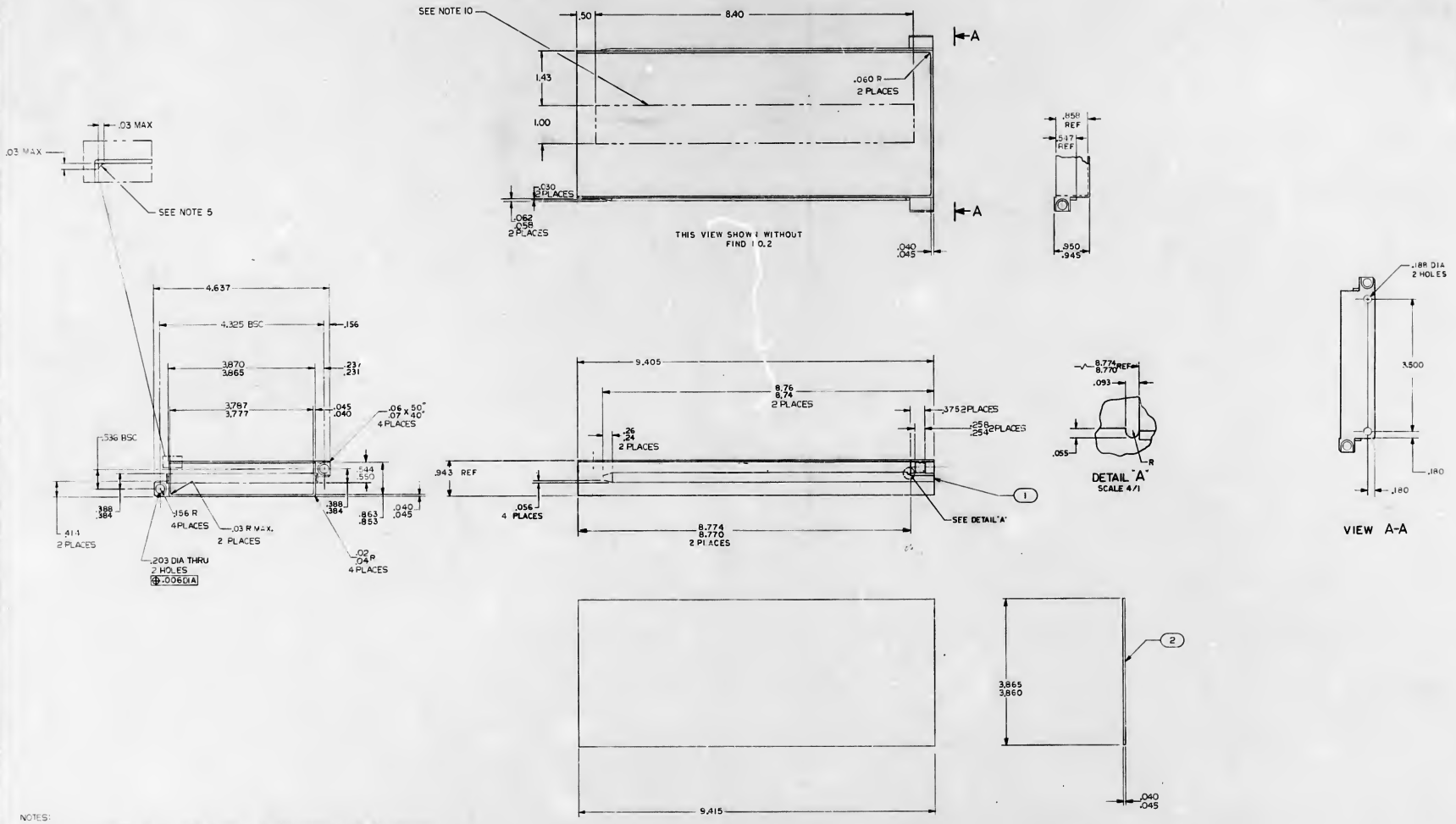

NOTES:

1. INTERPRET DRAWING IN ACCORDANCE WITH STANDARDS PRESCRIBED BY MIL-D-70327
2. MATERIAL: 6061—T6 AL PER QQ-A-250/11 TEMP 6
3. REMOVE BURRS AND SHARP EDGES .005-.015
4. IDENTIFY WITH PART NO. PER ND1002019
5. DIP BRAZE PER ND 1002073, EXCEPT "C" AND "D" OF PARAGRAPH 4.2.1
6. CHROMATE PER MIL-C-5541, TYPE II, GRADE C, CLASS 3
7. FINISH MACHINE AFTER BRAZING
8. ALL SURFACES 125 UNLESS OTHERWISE SPECIFIED
9. UNLESS OTHERWISE SPECIFIED ALL FILLETS AND RADII TO BE .020 MAX
10. UNITS SHALL BE SUBJECTED TO A 5 ± 1 PSIA AIR PRESSURE TEST IMMERSED IN WATER FOR A MINIMUM OF 2 MINUTES WITH NO VISIBLE AIR BUBLES RESTRAIN BOTH SIDES IN AREA SHOWN

QTY REQD	PART OR IDENTIFYING NO.	MATERIAL OR NOTES	NOMENCLATURE OR DESCRIPTION	FIND NO.
1	2004100-002		HOUSING TOP PLATE	2
1	2004100-001		HOUSING	1

LIST OF MATERIALS

2003053 NEXT ASSY	USED ON
APPLICATION	

UNLESS OTHERWISE SPECIFIED DIMENSIONS ARE IN INCHES
CAPACITOR VALUES ARE IN μf
RESISTOR VALUES ARE IN OHMS
TOLERANCES ON
FRACTIONS ± DECIMALS ± .03 ANGLES ±
DO NOT SCALE THIS DRAWING

MATERIAL: SEE NOTE 2

MIT INSTRUMENTATION LAB, CAMBRIDGE, MASS.

MANNED SPACECRAFT CENTER, HOUSTON, TEXAS

DRAWN / CHECKED / APPROVED / APPROVED MIT / APPROVED MSC

HOUSING

FIXED MEMORY MODULE

CODE IDENT NO. 80230 | SIZE E | DRAWING NO. 2004100

SCALE 1/1 | SHEET 1 OF 1

REVISIONS 20043						
SYM	ZONE	DESCRIPTION	DR	CHK	DATE	APPROVED

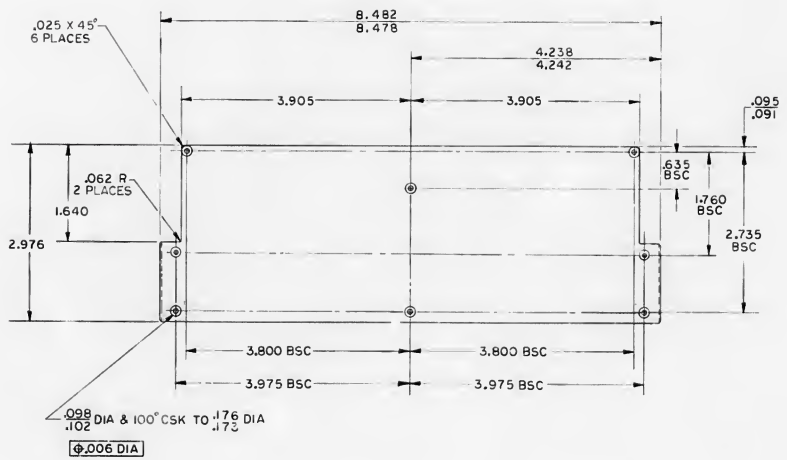

NOTES

1. INTERPRET DRAWING IN ACCORDANCE WITH STANDARDS PRESCRIBED BY MIL-D-70327
2. REMOVE BURRS AND SHARP EDGES .005/.015
3. ALL SURFACES 125
4. MATL: 6061-T6-AL PER QQ-A-250/11, TEMP 6
5. CHROMATE PER MIL-C-5541, TYPE II, GRADE C, CLASS 3
6. UNLESS OTHERWISE SPECIFIED ALL FILLETS AND RADII TO BE .010 MAX
7. IDENTIFY WITH DRAWING NO. AND REVISION PER ND1002019

QTY REQD	PART OR IDENTIFYING NO.	NOMENCLATURE OR DESCRIPTION	FIND NO.

LIST OF MATERIALS

2003059	
NEXT ASSY	USED ON
APPLICATION	

UNLESS OTHERWISE SPECIFIED DIMENSIONS ARE IN INCHES
CAPACITOR VALUES ARE IN μf
RESISTOR VALUES ARE IN OHMS
TOLERANCES ON
FRACTIONS ± .005 DECIMALS ± .005 ANGLES ± 1°
DO NOT SCALE THIS DRAWING

MATERIAL: SEE NOTE 4

MIT INSTRUMENTATION LAB
CAMBRIDGE, MASS.

MANNED SPACECRAFT CENTER
HOUSTON, TEXAS

DRAWN	J. A. Geffen	21 APR 65
CHECKED	[illegible]	22 APR 65
APPROVED	[illegible]	28 APR 65
APPROVED	[illegible]	13 MAY 65
APPROVED MIT	[illegible]	[illegible]
APPROVED MSC	[illegible]	[illegible]

DATE

COVER
INTERCONNECTION HEADER
FIXED MEMORY

CODE IDENT NO.	SIZE	DRAWING NO.
80230	D	2004107

SCALE 1/1 SHEET 1 OF 1

REVISIONS 20015

SYM	ZONE	DESCRIPTION	DR	CHK	DATE	APPROVED
A		REVISED PER TDRR 20617				

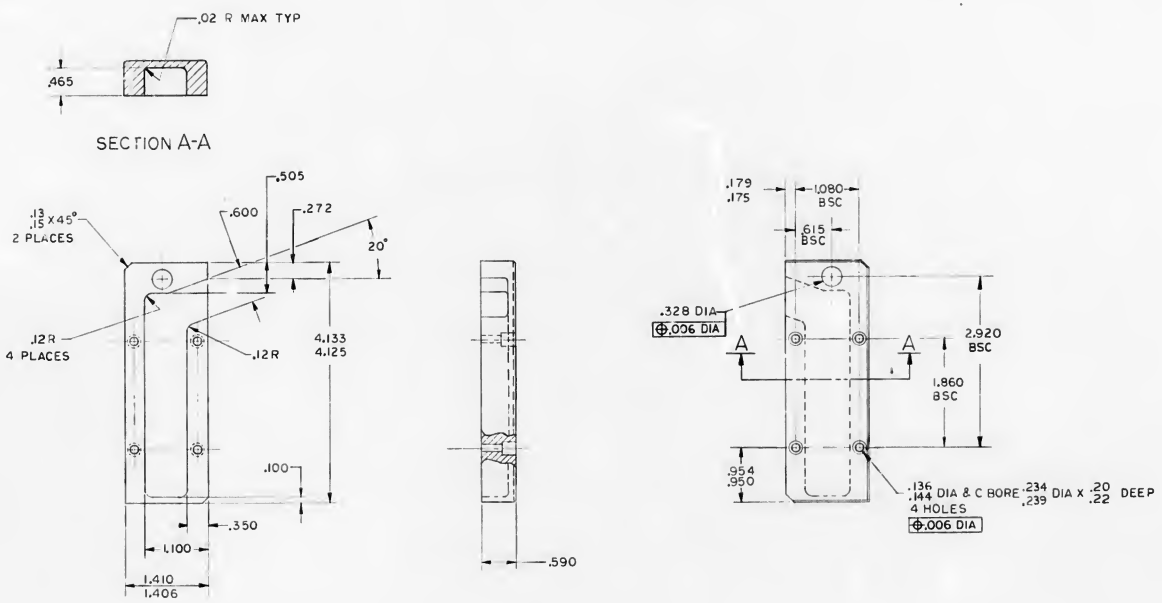

NOTES

1. INTERPRET DRAWING IN ACCORDANCE WITH STANDARDS PRESCRIBED BY MIL-D-70327
2. REMOVE BURRS AND SHARP EDGES .005/.015
3. ALL SURFACES 125/
4. MATL: 6061-T6-AL PER QQ-A-250/11. TEMP 6
5. CHROMATE PER MIL-C-5541, TYPE II, GRADE C, CLASS 3
6. UNLESS OTHERWISE SPECIFIED ALL FILLETS AND RADII TO BE .010 MAX
7. IDENTIFY WITH DRAWING NO. AND REVISION PER ND1002019

NEXT ASSY	USED ON
2003059	

APPLICATION

UNLESS OTHERWISE SPECIFIED DIMENSIONS ARE IN INCHES
CAPACITOR VALUES ARE IN µf
RESISTOR VALUES ARE IN OHMS
TOLERANCES ON
FRACTIONS ± DECIMALS XX ± .01 XXX ± .005 ANGLES ± 5°
DO NOT SCALE THIS DRAWING

MATERIAL
SEE NOTE 4

QTY REQD	PART OR IDENTIFYING NO.	NOMENCLATURE OR DESCRIPTION	FIND NO.

LIST OF MATERIALS

MIT INSTRUMENTATION LAB
CAMBRIDGE, MASS.

MANNED SPACECRAFT CENTER
HOUSTON, TEXAS

DRAWN J. A. Saffioti 2/11/66
CHECKED 2/18/66
APPROVED 2/18/66
APPROVED 2/18/66

COVER
CONNECTOR B41
FIXED MEMORY

APPROVED MIT
APPROVED MSC
DATE

CODE IDENT NO. 80230
SIZE D
DRAWING NO. 2004108
SCALE 1/1
SHEET 1 OF 1

REVISIONS 20043

SYM	ZONE	DESCRIPTION	DR	CHK	DATE	APPROVED
A		REVISED PER TDRR 20617	RS			

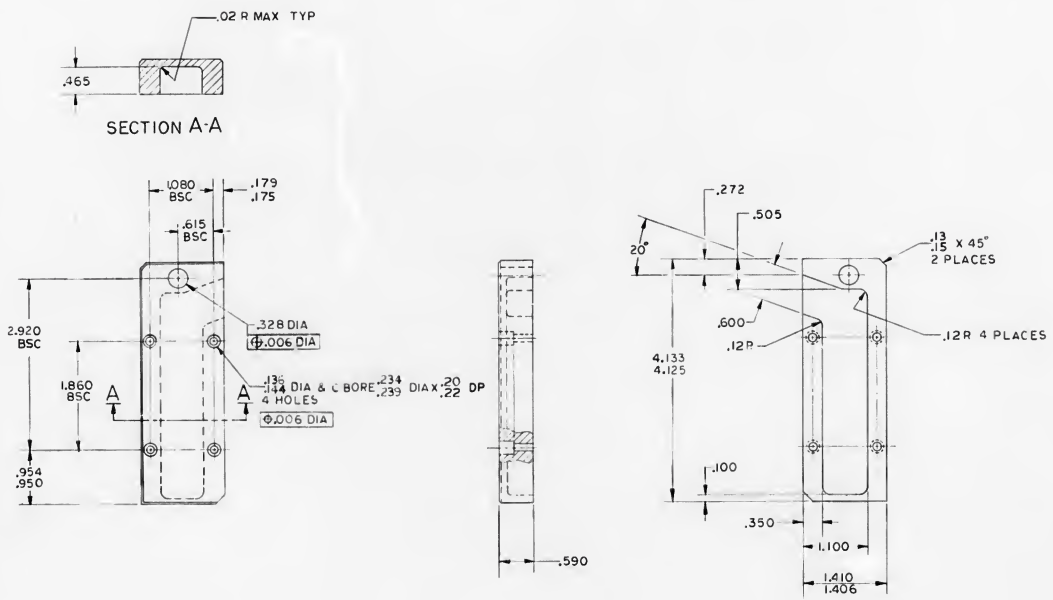

NOTES

1. INTERPRET DRAWING IN ACCORDANCE WITH STANDARDS PRESCRIBED BY MIL-D-70327
2. REMOVE BURRS AND SHARP EDGES .005/.015
3. ALL SURFACES 125/
4. MATL: 6061-T6-AL PER QQ-A-250/11, TEMP 6
5. CHROMATE PER MIL-C-5541, TYPE II, GRADE C, CLASS 3
6. UNLESS OTHERWISE SPECIFIED ALL FILLETS AND RADII TO BE .010 MAX
7. IDENTIFY WITH DRAWING NO. AND REVISION PER ND1002019

QTY REQD	PART OR IDENTIFYING NO.	NOMENCLATURE OR DESCRIPTION	FIND NO.

LIST OF MATERIALS

2003059	
NEXT ASSY	USED ON
APPLICATION	

UNLESS OTHERWISE SPECIFIED
DIMENSIONS ARE IN INCHES
CAPACITOR VALUES ARE IN μf
RESISTOR VALUES ARE IN OHMS
TOLERANCES ON
FRACTIONS ± — DECIMALS ± .XX ± .01 .XXX ± .005 ANGLES ± 5°
DO NOT SCALE THIS DRAWING

MATERIAL: SEE NOTE 4

MIT INSTRUMENTATION LAB
CAMBRIDGE, MASS

MANNED SPACECRAFT CENTER
HOUSTON, TEXAS

DRAWN J. A. Sullivan 21 APR 65
CHECKED
APPROVED
APPROVED

COVER
CONNECTOR B42
FIXED MEMORY

APPROVED MIT
APPROVED MSC
DATE

CODE IDENT NO 80230 | SIZE D | DRAWING NO. 2004109

SCALE 1/1 | SHEET 1 OF 1

REVISIONS 21166						
SYM	ZONE	DESCRIPTION	DR	CHK	DATE	APPROVED

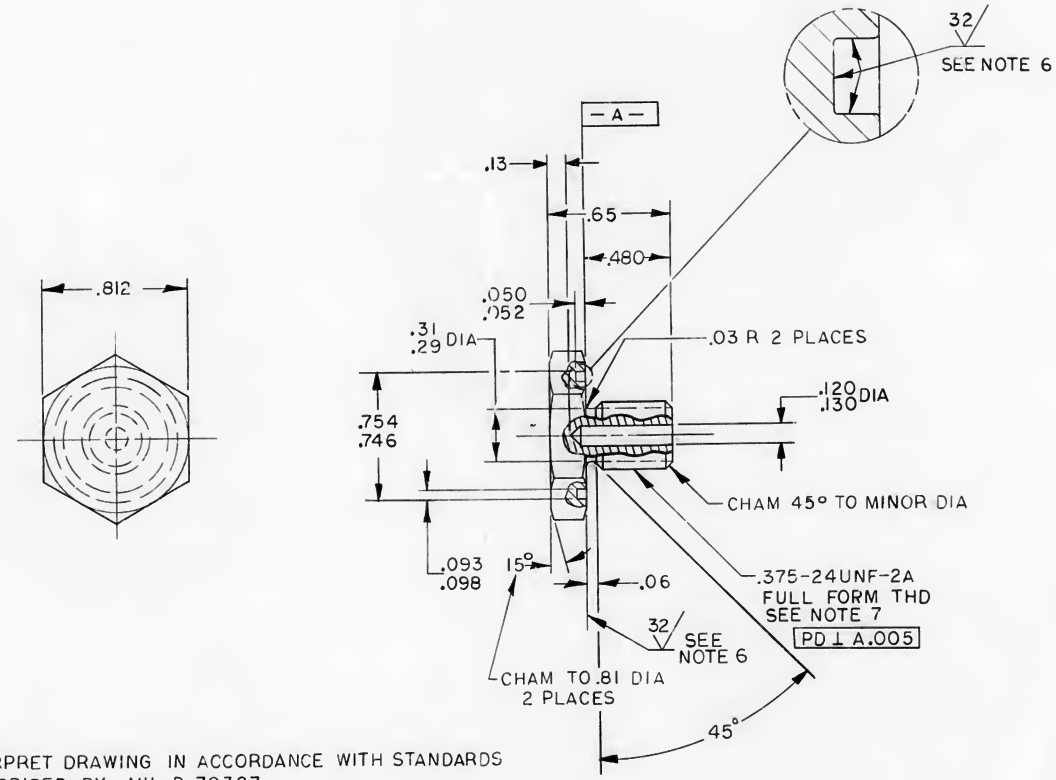

NOTES

1. INTERPRET DRAWING IN ACCORDANCE WITH STANDARDS PRESCRIBED BY MIL-D-70327
2. MATERIAL: CRES PER QQ-S-763, CLASS 303, COND A
3. PASSIVATE PER MIL-F-14072, FINISH E300 TYPE II
4. REMOVE BURRS AND SHARP EDGES .005/.015
5. ALL SURFACES 125√ UNLESS OTHERWISE SPECIFIED
6. SURFACES SHALL BE FREE FROM LONGITUDINAL AND SPIRAL TOOL MARKS
7. THREADS SHALL CONFORM TO MIL-S-7742

QTY REQD	PART OR IDENTIFYING NO.	NOMENCLATURE OR DESCRIPTION	FIND NO.

LIST OF MATERIALS

2003100	
NEXT ASSY	USED ON
APPLICATION	

UNLESS OTHERWISE SPECIFIED
DIMENSIONS ARE IN INCHES
CAPACITOR VALUES ARE IN μf
RESISTOR VALUES ARE IN OHMS
TOLERANCES ON
FRACTIONS ± — DECIMALS .XX ±.01 .XXX ±.005 ANGLES ± 2°
DO NOT SCALE THIS DRAWING

MATERIAL

SEE NOTE 2

MIT INSTRUMENTATION LAB
CAMBRIDGE, MASS.

MANNED SPACECRAFT CENTER
HOUSTON, TEXAS

DRAWN	E.W. Johnson	4/22/65
CHECKED	R. Lindstrom	8 July 65
APPROVED		
APPROVED	Edw. C. Hall	20 July 65
APPROVED MIT	W. Kuffer	27 July 65
APPROVED MSC	R. C. Mott Jr	7/27/65

DATE

PLUG
MACHINE THREAD

CODE IDENT NO.	SIZE	DRAWING NO.
80230	C	2004110

SCALE 2/1 SHEET 1 OF 1

2004110

REVISIONS 19208						
SYM	ZONE	DESCRIPTION	DR	CHK	DATE	APPROVED

PART NO.	FIND NO. 1	MARKING INK
2004112-001	1006290	1006271-8
2004112-002	1006838	1006271-8

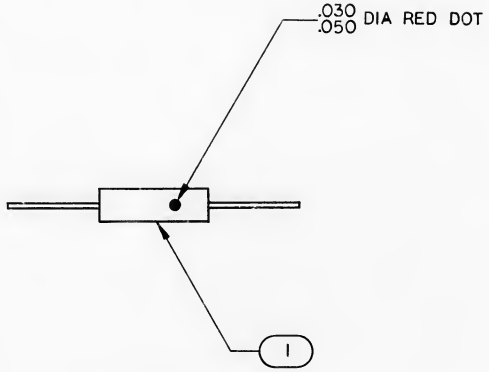

GENERAL REQUIREMENT:

UPON COMPLETION OF ALL REQUIREMENTS AS SPECIFIED IN ND1002267 ONLY THOSE DIODES FROM LOTS WHICH QUALIFY FOR FLIGHT HARDWARE UNDER THE PROVISIONS OF ND1002267 SHALL BE MARKED IN RED AS INDICATED IN THIS DOCUMENT

NOTES:

1. INTERPRET DRAWING IN ACCORDANCE WITH STANDARDS PRESCRIBED BY MIL-D-70327
2. IDENTIFY WITH DRAWING NO. AND REVISION PER ND1002019

QTY REQD	PART OR IDENTIFYING NO.	NOMENCLATURE OR DESCRIPTION	FIND NO.
1	SEE CHART	DIODE, ZENER	1

LIST OF MATERIALS

NEXT ASSY	USED ON
APPLICATION	

UNLESS OTHERWISE SPECIFIED
DIMENSIONS ARE IN INCHES
CAPACITOR VALUES ARE IN μf
RESISTOR VALUES ARE IN OHMS
TOLERANCES ON
FRACTIONS ± ——— DECIMALS ± ——— ANGLES ± ———
DO NOT SCALE THIS DRAWING

MATERIAL ———

MIT INSTRUMENTATION LAB
CAMBRIDGE, MASS.

MANNED SPACECRAFT CENTER
HOUSTON, TEXAS

		DATE
DRAWN	G. Munson	26 APR 65
CHECKED	R. Richard	12 MAY 65
APPROVED	L D Hanley	18 May 65
APPROVED	Edwin C Hall	18 May 65
APPROVED MIT	M G Murphy	18 May 65
APPROVED MSC	F Michael	5/18/65

DIODE, ZENER
(FLIGHT QUALIFIED)

CODE IDENT NO.	SIZE	DRAWING NO.
80230	C	2004112

SCALE NONE ——— SHEET 1 OF 1

2004112

REVISIONS 21166						
SYM	ZONE	DESCRIPTION	DR	CHK	DATE	APPROVED

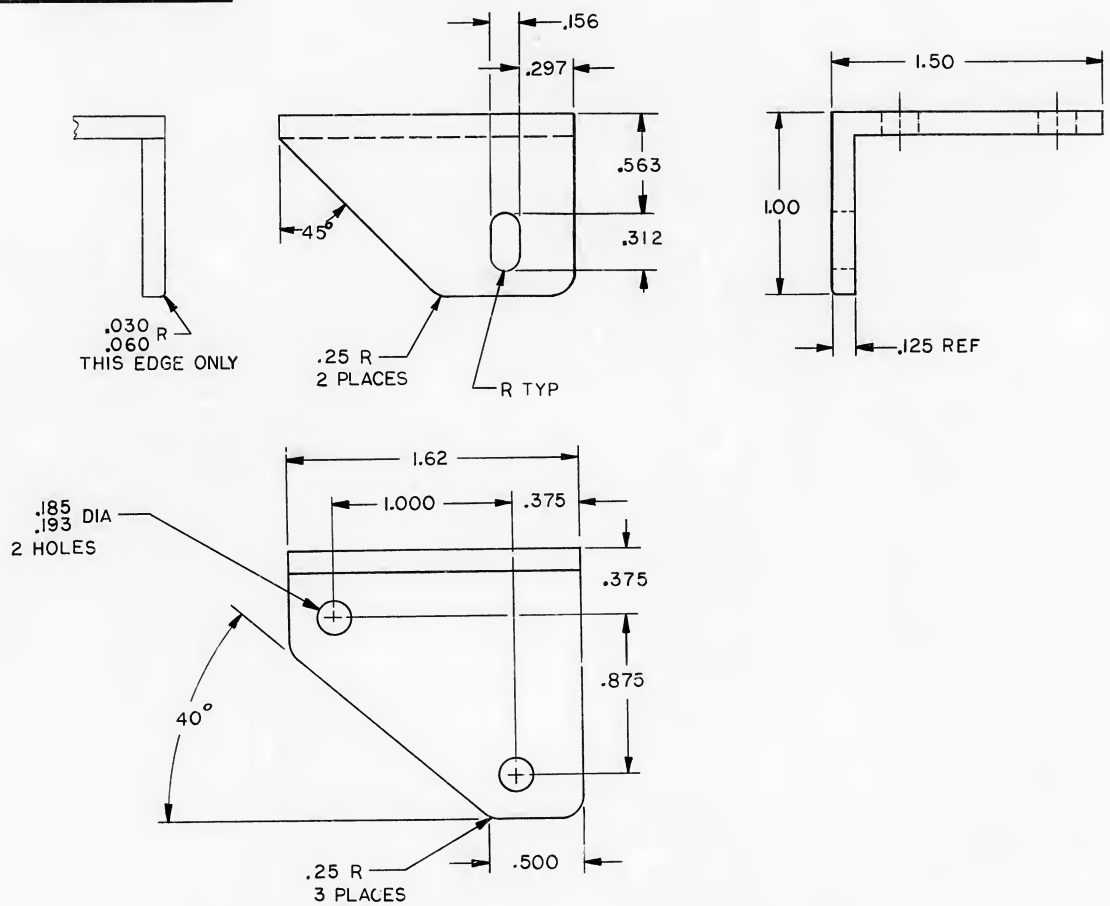

NOTES

1. INTERPRET DRAWING IN ACCORDANCE WITH STANDARDS PRESCRIBED BY MIL–D–70327
2. MATERIAL: .125 THK 6063-T5 ALUMINUM ALLOY, EXTRUDED ANGLE PER QQ–A–274
3. REMOVE BURRS AND BREAK SHARP EDGES .005/.015
4. CHROMATE PER MIL–C–5541, TYPE II, GRADE C, CLASS 3
5. IDENTIFY WITH DRAWING NO. AND REVISION PER ND1002019

QTY REQD	PART OR IDENTIFYING NO.	NOMENCLATURE OR DESCRIPTION	FIND NO.

LIST OF MATERIALS

2003100	
NEXT ASSY	USED ON
APPLICATION	

UNLESS OTHERWISE SPECIFIED
DIMENSIONS ARE IN INCHES
CAPACITOR VALUES ARE IN μf
RESISTOR VALUES ARE IN OHMS
TOLERANCES ON
FRACTIONS ±— DECIMALS XXX ±.005 XX ±.01 ANGLES ± 2°
DO NOT SCALE THIS DRAWING

MATERIAL

SEE NOTE 2

MIT INSTRUMENTATION LAB
CAMBRIDGE, MASS.

MANNED SPACECRAFT CENTER
HOUSTON, TEXAS

DRAWN 26 July 65
CHECKED 8 July 65
APPROVED
APPROVED 30 July 65
APPROVED MIT 27 July 65
APPROVED MSC 1/27/66
DATE

BRACKET CABLE
AGC

CODE IDENT NO.	SIZE	DRAWING NO.
80230	C	2004113

SCALE 2/1 SHEET 1 OF 1

2004113

REVISIONS 21166						
SYM	ZONE	DESCRIPTION	DR	CHK	DATE	APPROVED

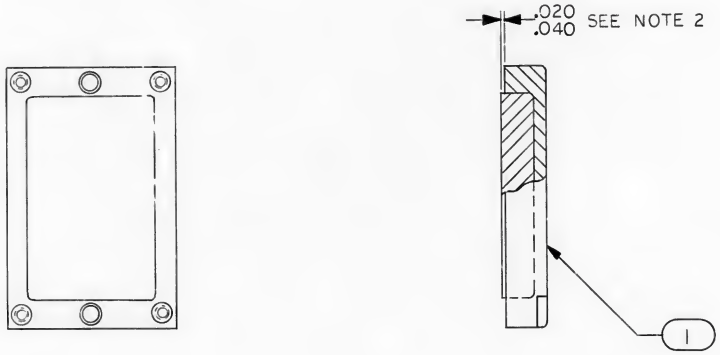

NOTES

1. INTERPRET DRAWING IN ACCORDANCE WITH STANDARDS PRESCRIBED BY MIL-D-70327
2. ENCAPSULATE WITH SILASTIC RUBBER PER ND1002009 METHOD C OR D

QTY REQD	PART OR IDENTIFYING NO.	NOMENCLATURE OR DESCRIPTION	FIND NO.
1	2004114	COVER, TEST CONNECTOR	1

LIST OF MATERIALS

2003100	
NEXT ASSY	USED ON
APPLICATION	

UNLESS OTHERWISE SPECIFIED
DIMENSIONS ARE IN INCHES
CAPACITOR VALUES ARE IN μf
RESISTOR VALUES ARE IN OHMS
TOLERANCES ON
FRACTIONS ± ——— DECIMALS ± ——— ANGLES ± ———
DO NOT SCALE THIS DRAWING

MATERIAL

———

MIT INSTRUMENTATION LAB
CAMBRIDGE, MASS.

MANNED SPACECRAFT CENTER
HOUSTON, TEXAS

DRAWN J. Haney 26 Apr 65
CHECKED A. Vinelstone 28 Apr 65
APPROVED
APPROVED Seb C Hall 30 July 65
APPROVED MIT W. Hopfer 27 Jul 65
APPROVED MSC G. C. Miller 7/27/65
DATE

COVER, POTTED
TEST CONNECTOR AGC

CODE IDENT NO.	SIZE	DRAWING NO.
80230	C	2004115
SCALE 1/1		SHEET 1 OF 1

2004115

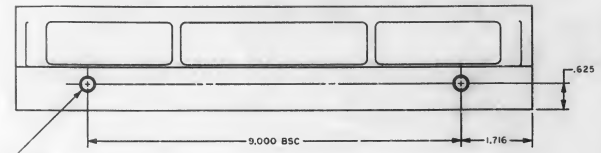

4
C'BORE .331/.336 DIA X .610/.625 DEEP
CSK 82° X .390 DIA
TAP 3/8-16UNC-2B X .438 MIN
FULL THD 2 HOLES
⌖ .014 DIA

VIEW G-G

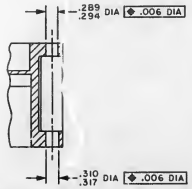

SECTION E-E
14 PLACES

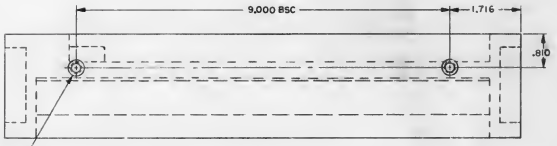

4
C'BORE .331/.336 DIA X .610/.625 DEEP CSK 82° X .390 DIA
TAP 3/8-16UNC-2B X .438 MIN FULL THD 2 HOLES
⌖ .014 DIA

VIEW B-B

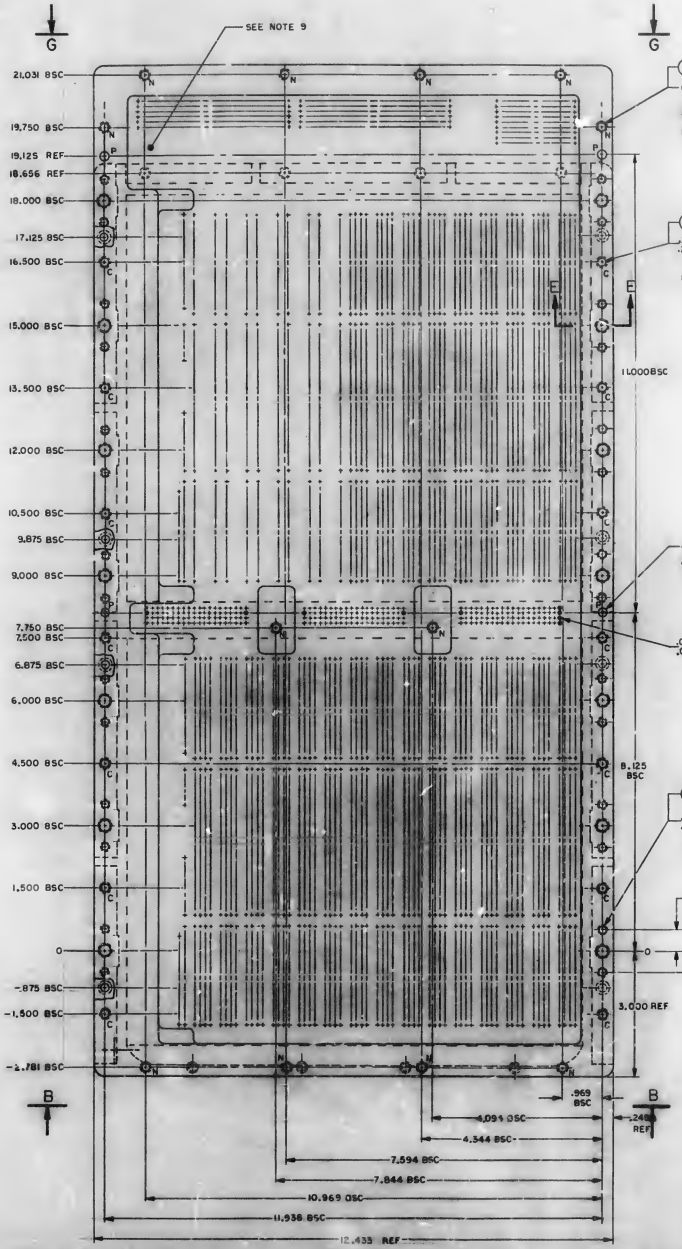

2
CBORE .227/.231 DIA X .408/.438 DEEP
AND CSK 82° X .250 DIA,
TAP 1/4-28UN-2B X .220/.240 DEEP
FULL THD 16 N HOLES
⌖ .005 DIA

2
.227/.231 DIA AND CSK 82° X .250 DIA,
TAP 1/4-28UN-2B X .220/.240 DEEP
FULL THD 14 C HOLES
⌖ .005 DIA

C'BORE .1865/.1870 DIA X .281 DEEP
4 P HOLES ⌖ .002 DIA
⊥ N .0005

.080/.084 DIA AND CSK 60° X .110 DIA
24C HOLES ⌖ .004 DIA

6
.165/.169 DIA. THRU AND
TAP NO. 10-32 UN-2B THRU
FULL THD 28 HOLES
⌖ .014 DIA

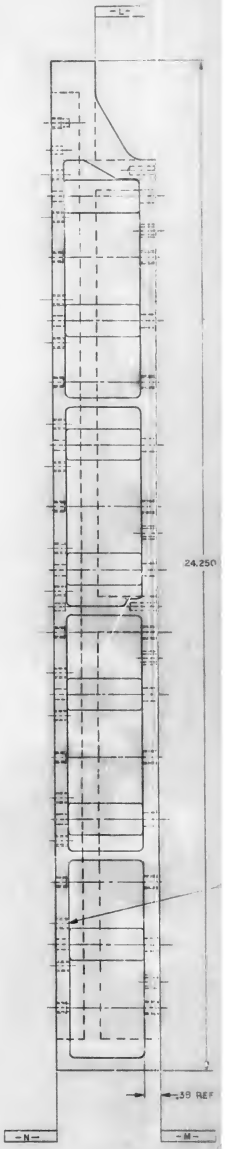

NOTES
1. INTERPRET DRAWING IN ACCORDANCE WITH STANDARDS PRESCRIBED BY MIL-D-7527
2. MATL: 6061-T6 AL PER QQ-A-250/11, TEMP T6
3. CHROMATE PER MIL-C-5541, TYPE II, GRADE C, CLASS 3 BEFORE INSTALLING FIND NO. 2, 3, 4, 5, 6 AND 7
4. ALL SURFACES 125 UNLESS OTHERWISE SPECIFIED
5. REMOVE BURRS AND SHARP EDGES .005/.015
6. UNLESS OTHERWISE SPECIFIED ALL FILLETS AND RADII .125
7. INSTALL FIND NO. 2, 3, 4, 5 AND 6 PER ND1002121
8. INSTALL FIND NO. 7 PER MS 33646 AND REMOVE DRIVING TANG
9. COAT THREADS OF FIND NO. 2, 3, 4, 5, 6 AND 7 WITH MIL-P-8585, COLOR YELLOW
10. IDENTIFY WITH PART NO. PER ND1002019 AND SERIALIZE PER ND1002023 WHERE SHOWN

2004116 E

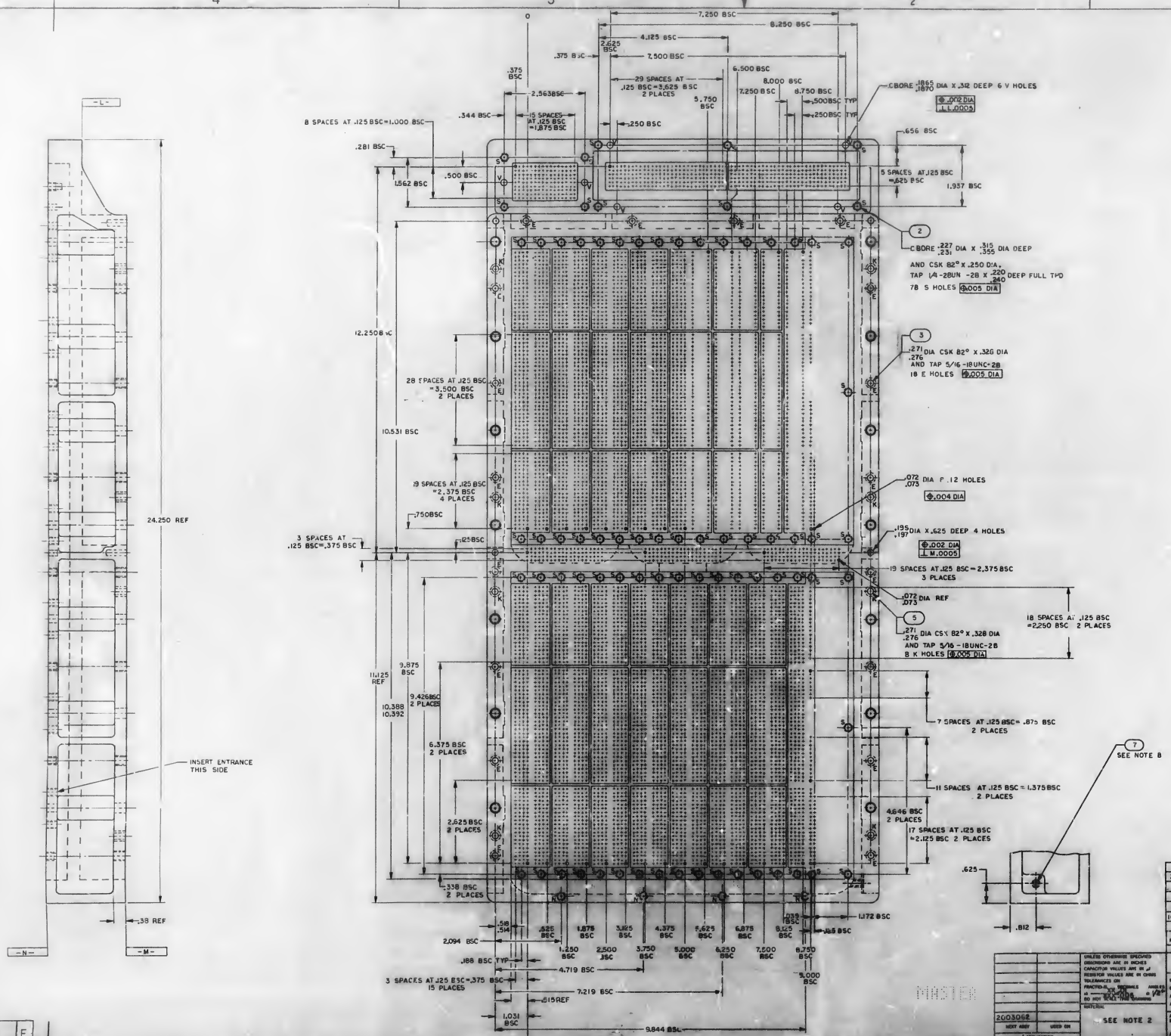

REVISIONS 19219						
SYM	QTY REQ	DESCRIPTION	DR	CH	DATE	APPROVED
A		REVISED PER TDRR 20285				
B		REVISED PER TDRR 21251				
C		REVISED PER TDRR 22158				
D		REVISED PER TDRR 22617				
E		REVISED PER TDRR 23147				

QTY REQD	PART OR IDENTIFYING NO	NOMENCLATURE OR DESCRIPTION	FIGURE NO
1	MS21209-C0815	INSERT, THREADED, SELF-LOCKING	7
28	1006702-2	INSERT, THREADED, SELF-LOCKING	6
8	NAS1394CA-3	INSERT, THREADED	5
4	NAS1394CA-4L	INSERT, THREADED, SELF-LOCKING	4
18	NAS1394CA-3L	INSERT, THREADED, SELF-LOCKING	3
108	1006702-5	INSERT, THREADED, SELF-LOCKING	2
1	2004116-001	TRAY A MACHINED	1

LIST OF MATERIALS

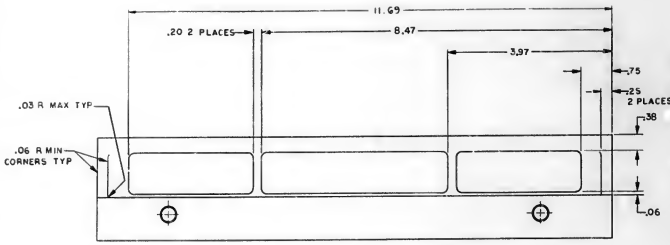

VIEW A-A

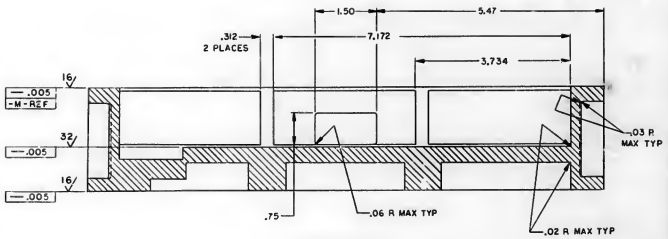

SECTION C-C

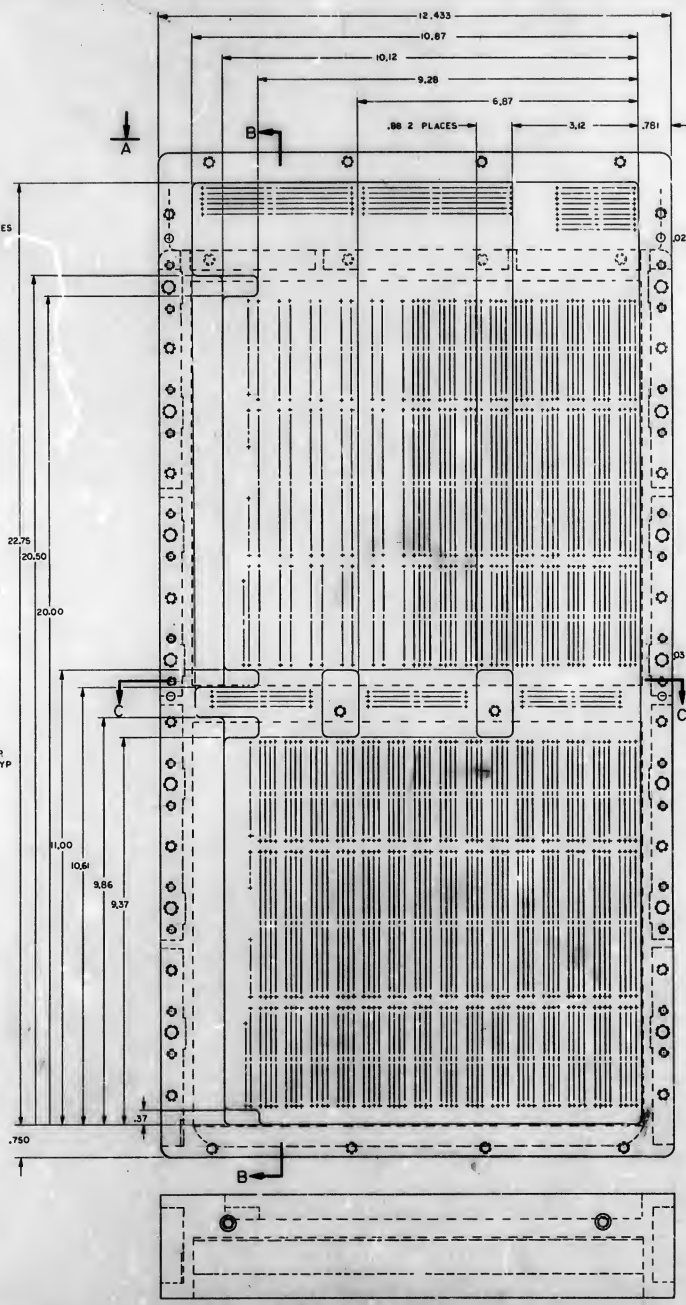

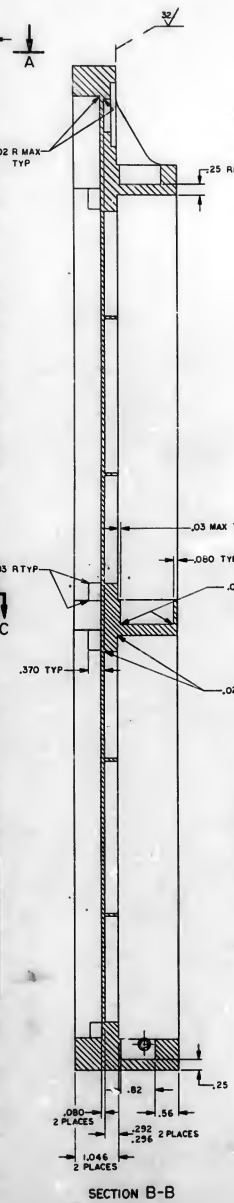

SECTION B-B

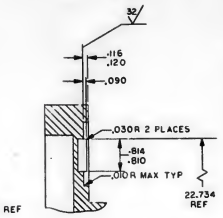

SECTION D-D

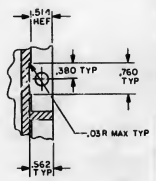

SECTION A-A

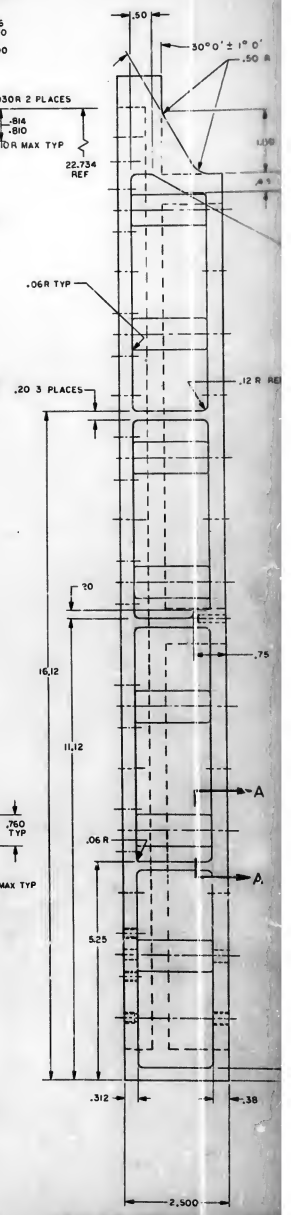

DIM. IN THIS VIEW APPLY TO BOTH

2004116 E

REVISIONS					
SYM	ZONE	DESCRIPTION	DR	CHK	DATE	APPROVED
A		REVISED PER TDRR 20285				
B		REVISED PER TDRR 21251				
C		REVISED PER TDRR 22158				
D		REVISED PER TDRR 22617				
E		REVISED PER TDRR 23147				

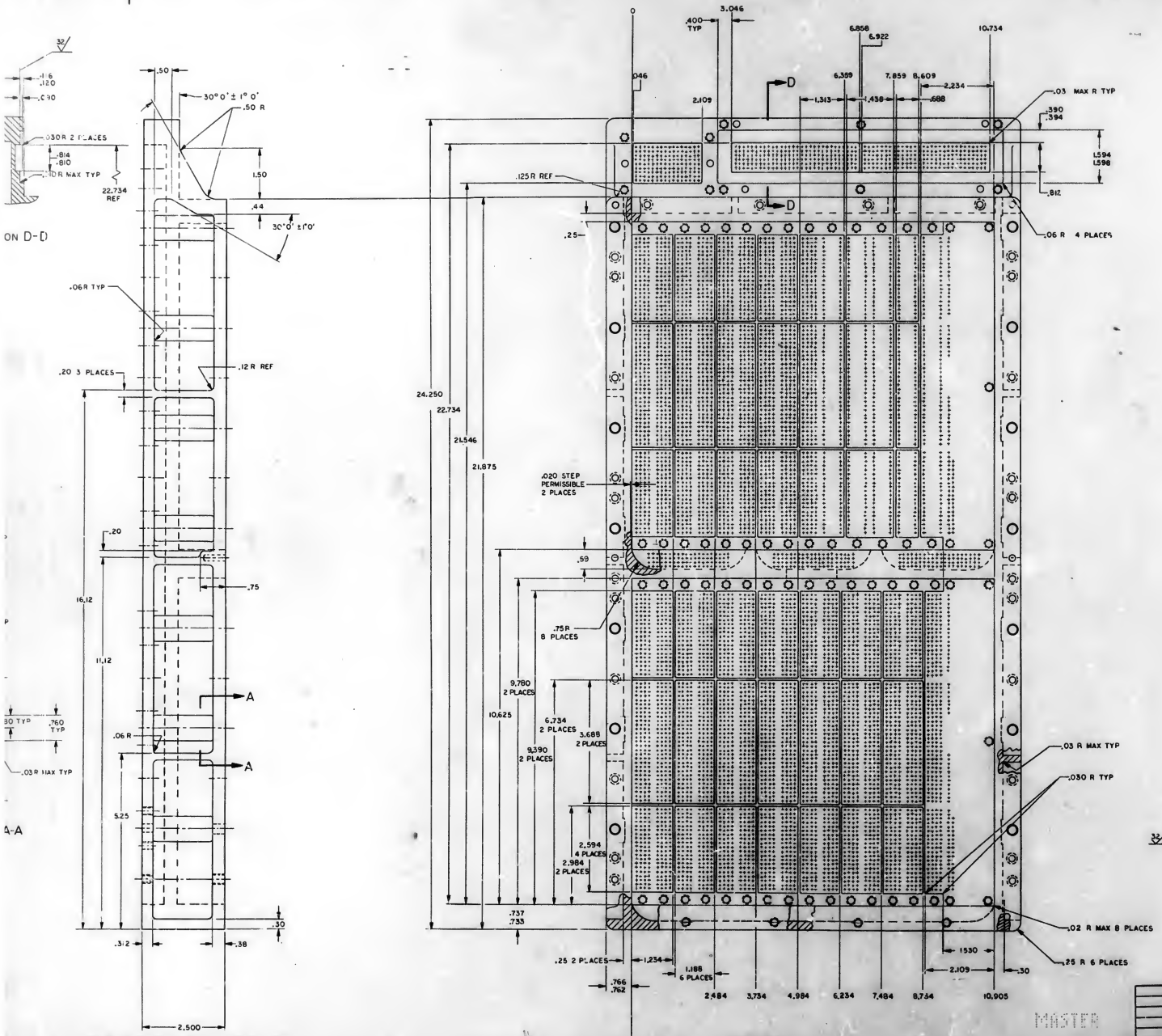

		UNLESS OTHERWISE SPECIFIED DIMENSIONS ARE IN INCHES DECIMAL VALUES ARE IN all DECIMAL VALUES ARE IN CAPS TOLERANCES ON FRACTIONS DEC. ±'S ANGLES ± ± ± DO NOT SCALE THIS DRAWING MATERIAL	
NEXT ASSY	USED ON		
APPLICATION			

MIT INSTRUMENTATION LAB CAMBRIDGE, MASS		MANNED SPACECRAFT CENTER HOUSTON, TEXAS	
DRAWN		TRAY A INSEPARABLE ASSY AGC	
CHECKED			
APPROVED			
APPROVED			
APPROVED MIT		CODE IDENT NO. 80230	SIZE J
APPROVED NASA		SCALE	DRAWING NO. 2004116
			SHEET 2 OF 2

2004116 E

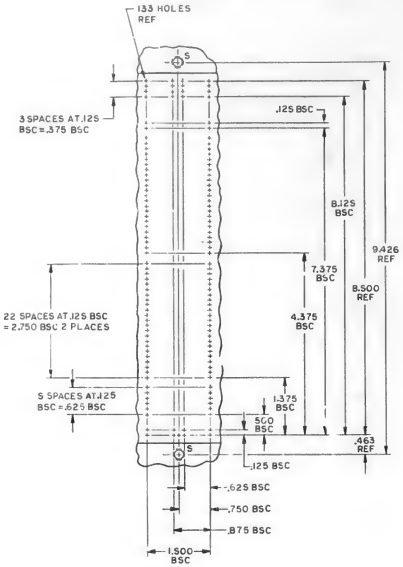

DETAIL A

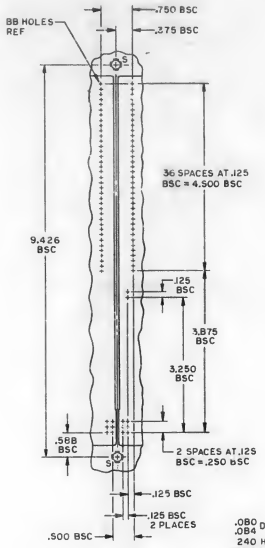

DETAIL B

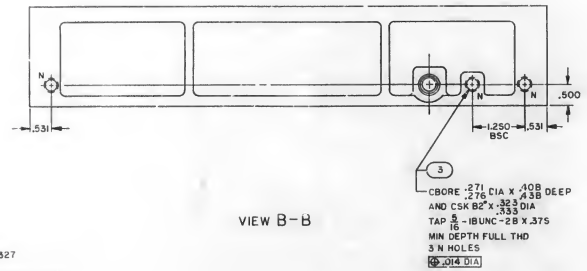

VIEW B-B

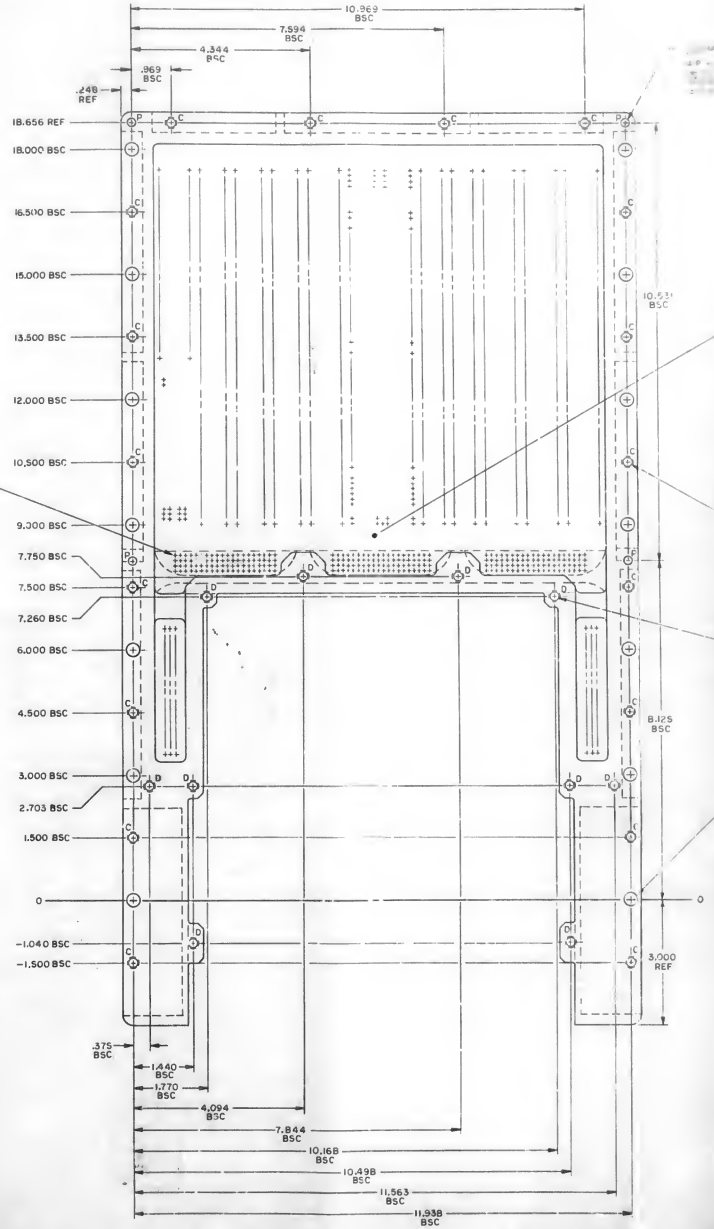

NOTES

1. INTERPRET DRAWING IN ACCORDANCE WITH STANDARDS PRESCRIBED BY MIL-D-70327
2. MATL: 6061-T6-AL PER QQ-A-250/11, TEMP 6
3. CHROMATE PER MIL-C-5541, TYPE II, GRADE C, CLASS 3, BEFORE INSTALLING FIND NO. 2, 3 AND 4
4. ALL SURFACES 125/ UNLESS OTHERWISE SPECIFIED
5. REMOVE BURRS AND SHARP EDGES .005/.015
6. UNLESS OTHERWISE SPECIFIED ALL FILLETS AND RADII TO BE .125
7. INSTALL FIND NO. 2, 3 AND 4 PER ND1002121
8. COAT THREADS OF FIND NO. 2, 3 AND 4 WITH MIL-P-8585, COLOR YELLOW
9. INSTALL FIND NO. 4 .000/.015 BELOW SURFACE
10. IDENTIFY WITH PART NO. PER ND1002019 AND SERIALIZE PER ND1002023 WHERE SHOWN

2004117 D

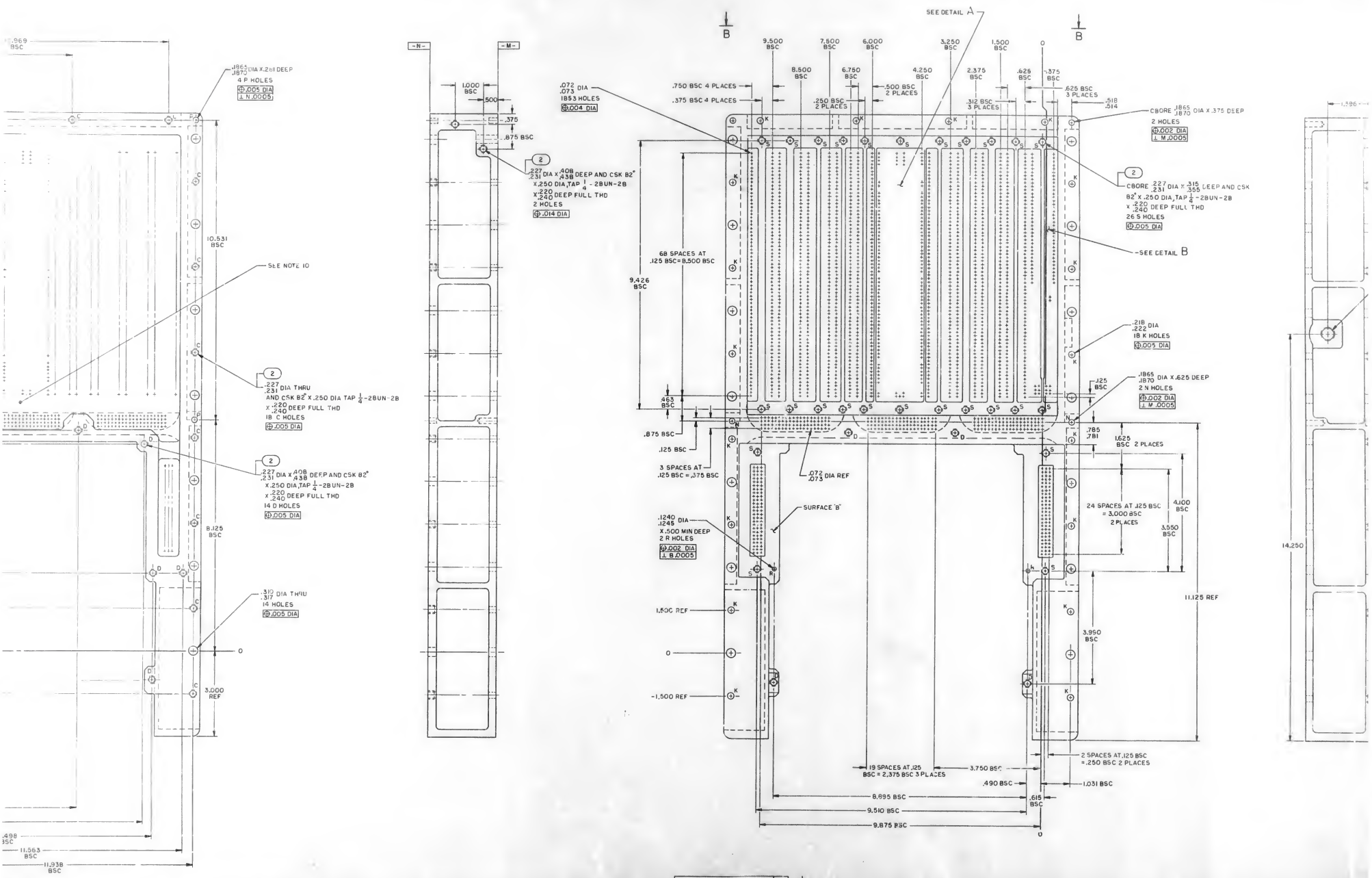
SEE DETAIL A
B
B
.1865 .1870 DIA X.281 DEEP
4 P HOLES
⊕.005 DIA
⊥ N .0005
SEE NOTE 10
.227 .231 DIA THRU
AND CSK 82° X .250 DIA TAP 1/4-28UN-2B
X .220 .240 DEEP FULL THD
18 C HOLES
⊕.005 DIA
.227 .231 DIA X .408 .438 DEEP AND CSK 82°
X .250 DIA TAP 1/4-28UN-2B
X .220 .240 DEEP FULL THD
14 D HOLES
⊕.005 DIA
.310 DIA THRU
.317
14 HOLES
⊕.005 DIA
.072 .073 DIA
1853 HOLES
⊕.004 DIA
.227 .231 DIA X .408 .438 DEEP AND CSK 82°
X .250 DIA TAP 1/4-28UN-2B
X .220 .240 DEEP FULL THD
2 HOLES
⊕.014 DIA
CBORE .1865 .1870 DIA X .375 DEEP
2 HOLES
⊕.002 DIA
⊥ M .0005
CBORE .227 .231 DIA X .315 .355 DEEP AND CSK
82° X .250 DIA TAP 1/4-28UN-2B
X .220 .240 DEEP FULL THD
26 S HOLES
⊕.005 DIA
SEE DETAIL B
.218 .222 DIA
18 K HOLES
⊕.005 DIA
.1865 .1870 DIA X .625 DEEP
2 N HOLES
⊕.002 DIA
⊥ M .0005
.072 .073 DIA REF
SURFACE "B"
.1240 .1245 DIA
X .500 MIN DEEP
2 R HOLES
⊕.002 DIA
⊥ B .0005
68 SPACES AT .125 BSC = 8.500 BSC
3 SPACES AT .125 BSC = .375 BSC
24 SPACES AT .125 BSC = 3.000 BSC 2 PLACES
19 SPACES AT .125 BSC = 2.375 BSC 3 PLACES
2 SPACES AT .125 BSC = .250 BSC 2 PLACES
1.625 BSC 2 PLACES
11.125 REF
14.250
10.531 BSC
8.125 BSC
3.000 REF
11.563 BSC
11.938 BSC
9.426 BSC
1.500 REF
-1.500 REF
8.695 BSC
9.510 BSC
9.875 BSC
3.750 BSC
.490 BSC
1.031 BSC
.615 BSC
3.950 BSC
4.100 BSC
3.550 BSC

200417 D

REVISIONS						
SYM	ZONE	DESCRIPTION	BY	DATE	CHK'D	APPROVED
A		REVISED PER 20286				
B		REVISED PER TDRR 21250				
C		REVISED PER TDRR 22617				
D		REVISED PER TDRR 23146				

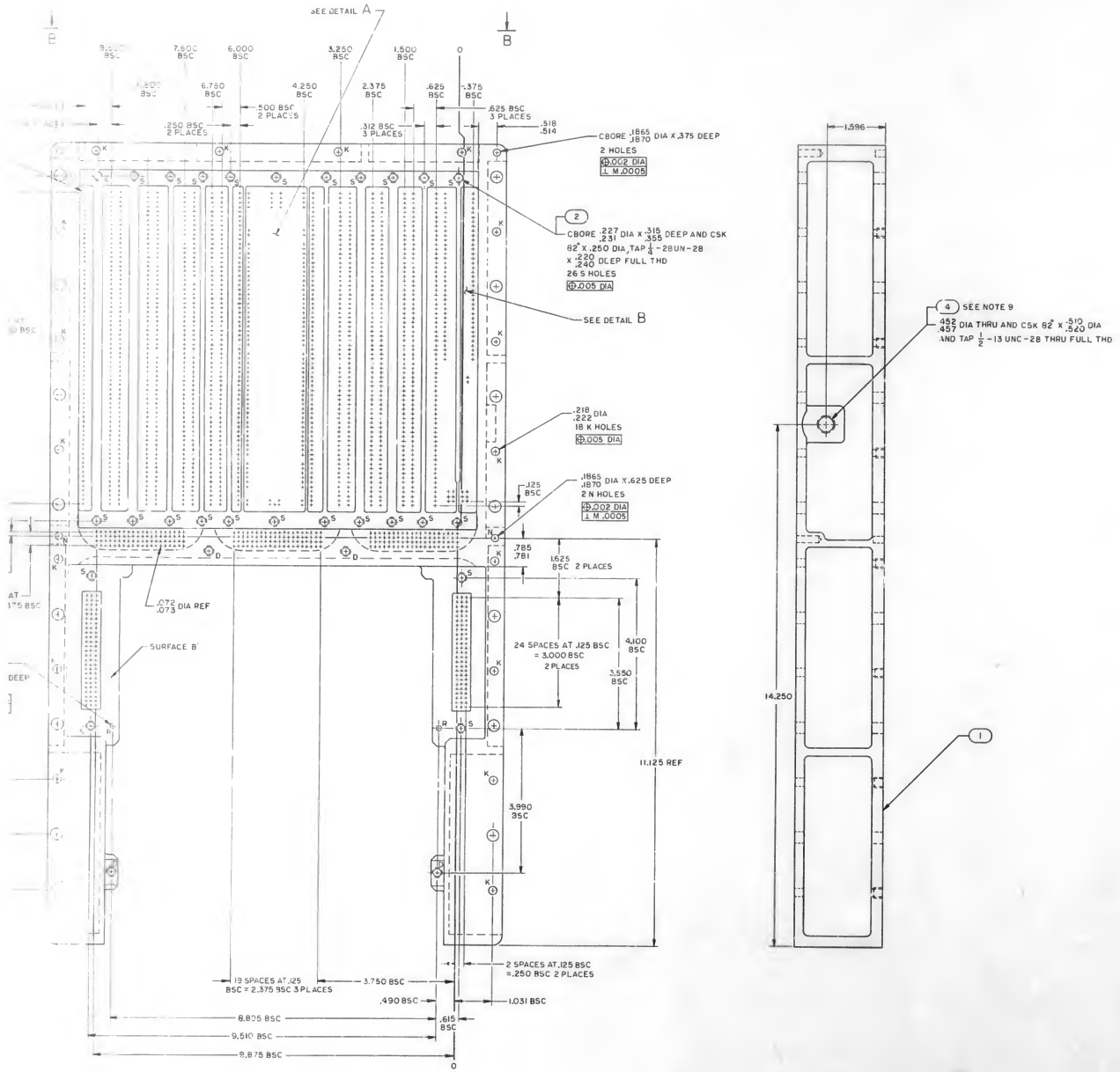

QTY REQD	PART OR IDENTIFYING NO	NOMENCLATURE OR DESCRIPTION	FIND NO
1	NAS1394CA-6L	INSERT, THREADED, SELF-LOCKING	4
3	NAS1394CA-3L	INSERT, THREADED, SELF-LOCKING	3
60	1006702-5	INSERT, THREADED, SELF-LOCKING	2
1	2004117-001	TRAY B, MACHINED	1

LIST OF MATERIALS

UNLESS OTHERWISE SPECIFIED DIMENSIONS ARE IN INCHES
CAPACITOR VALUES ARE IN μf
RESISTOR VALUES ARE IN OHMS
TOLERANCES ON:
FRACTIONS ±1/64 ANGLES ±1°
.x = ±.03 .xx = ±.01
DO NOT SCALE THIS DRAWING

MATERIAL: SEE NOTE 2

2003063
NEXT ASSY | USED ON
APPLICATION

MIT INSTRUMENTATION LAB
CAMBRIDGE, MASS

DRAWN R. C. Taylor
CHECKED
APPROVED
APPROVED
APPROVED MIT
APPROVED NAA

MANNED SPACECRAFT CENTER
HOUSTON, TEXAS

TRAY B
INSEPARABLE ASSY
AGC

CODE IDENT NO 80230 | SIZE J | DRAWING NO 2004117
SCALE 1/1 | SHEET 1 OF 2

MASTER

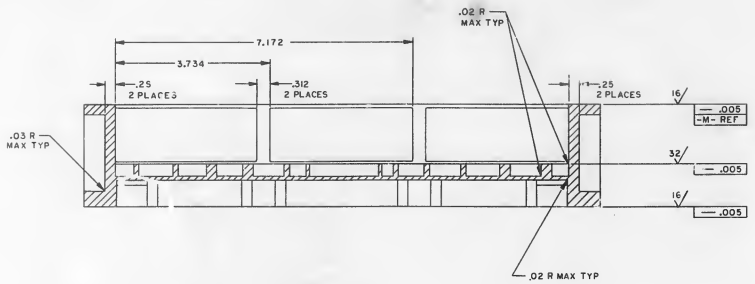

SECTION B-B

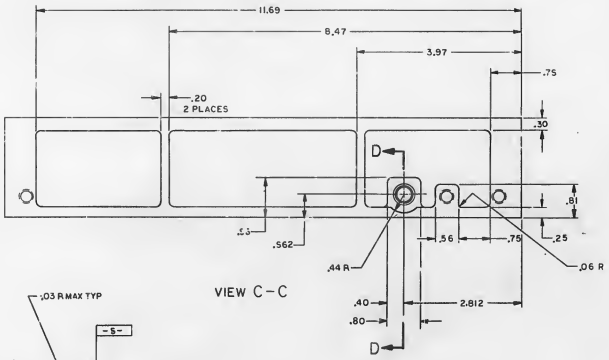

VIEW C-C

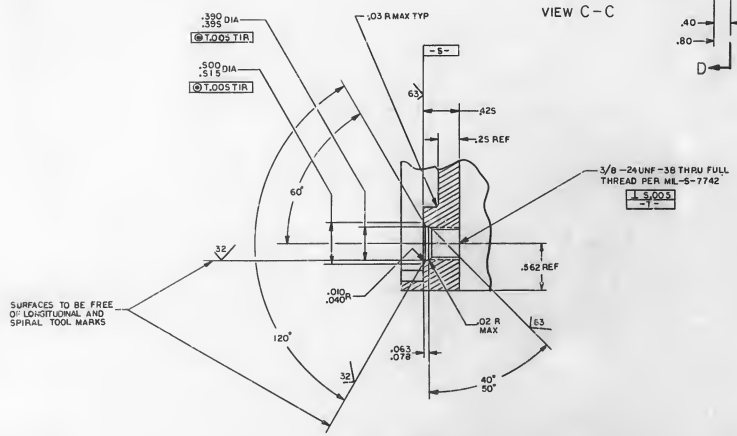

SECTION D-D
SCALE: 2/1

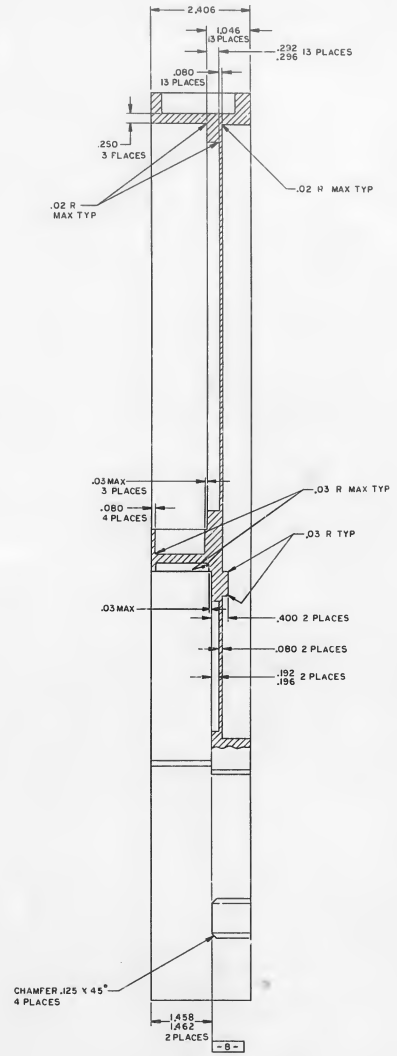

SECTION A-A

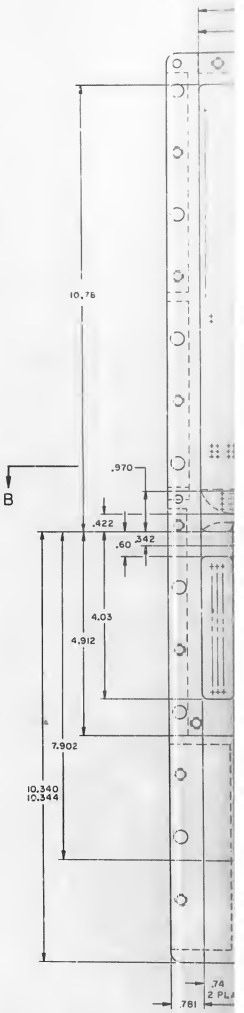

2004117 D

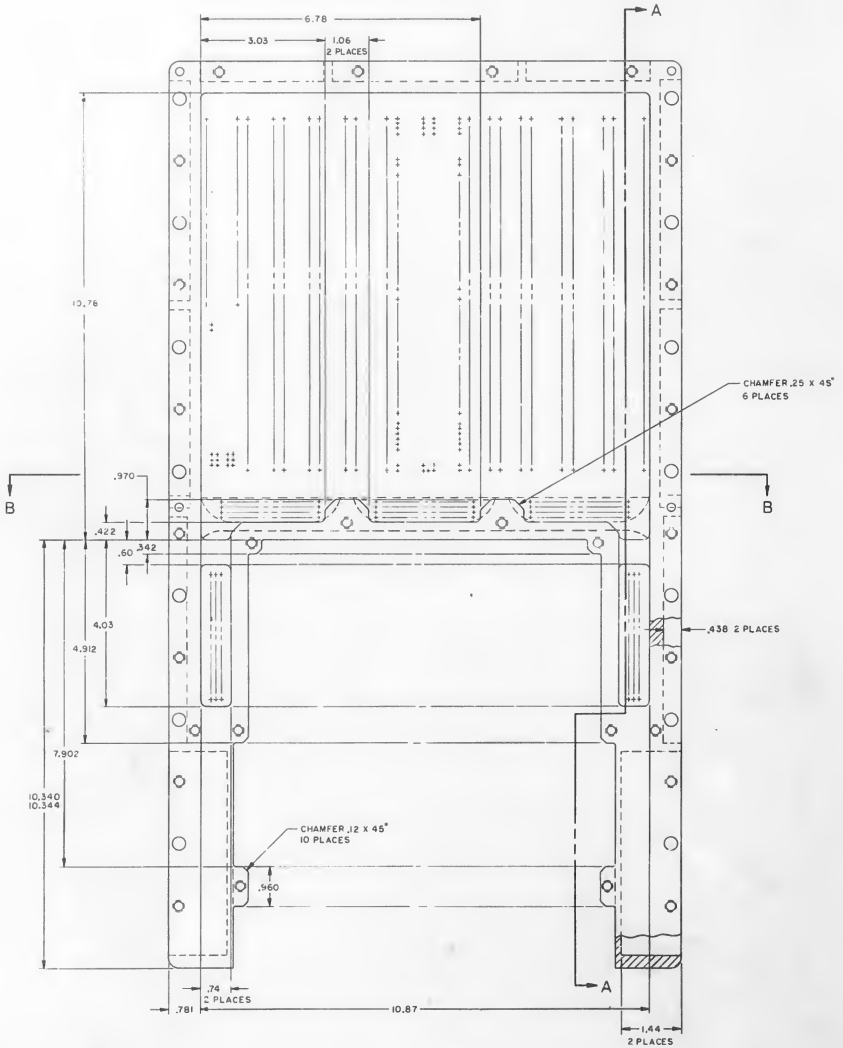
6.78
3.03
1.06
2 PLACES
A
10.76
CHAMFER .25 X 45°
6 PLACES
.970
B
B
.422
.60
.342
4.03
4.912
.438 2 PLACES
7.902
10.340
10.344
CHAMFER .12 X 45°
10 PLACES
.960
A
.74
2 PLACES
.781
10.87
1.44
2 PLACES

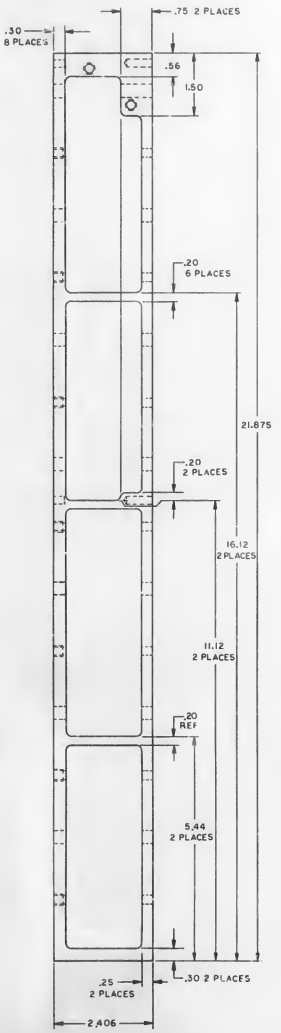
.30
8 PLACES
.75 2 PLACES
.56
1.50
.20
6 PLACES
21.875
.20
2 PLACES
16.12
2 PLACES
11.12
2 PLACES
.20
REF
5.44
2 PLACES
.25
2 PLACES
.30 2 PLACES
2.406

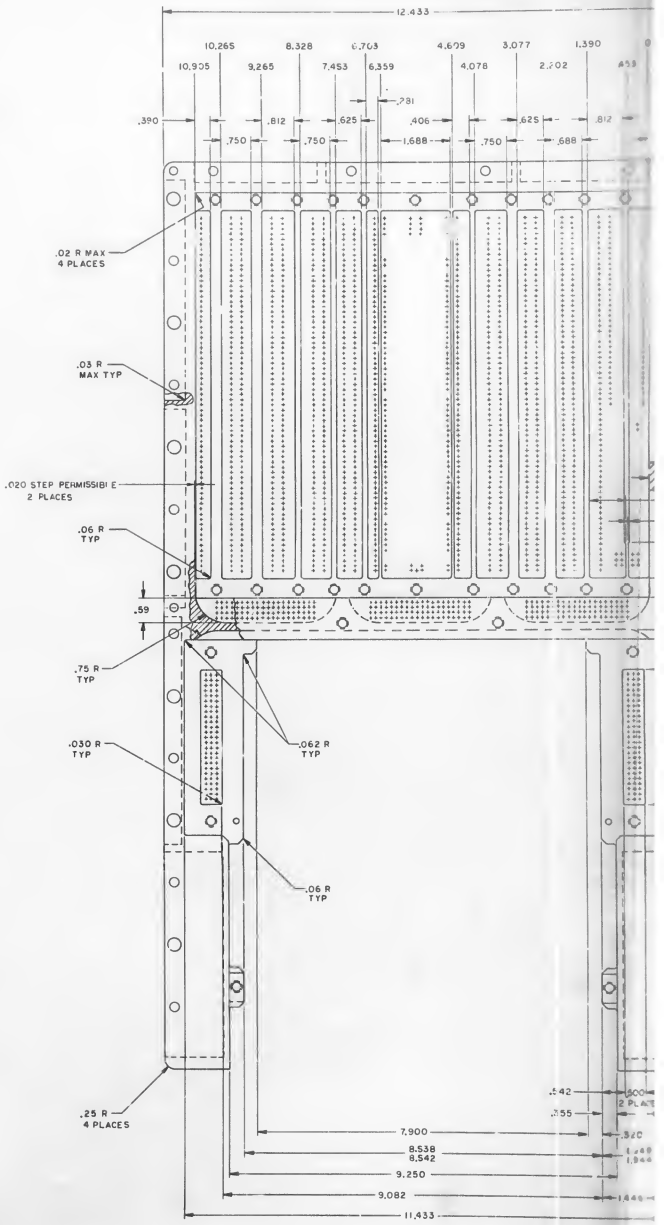
C
12.433
10.265
8.328
6.703
4.609
3.077
1.390
10.905
9.265
7.453
6.359
4.078
2.202
.781
.390
.812
.625
.406
.625
.812
.750
.750
1.688
.750
.688
.02 R MAX
4 PLACES
.03 R
MAX TYP
.020 STEP PERMISSIBLE
2 PLACES
.06 R
TYP
.59
.75 R
TYP
.030 R
TYP
.062 R
TYP
.06 R
TYP
.25 R
4 PLACES
.542
.755
7.900
8.538
8.542
9.250
9.082
11.433

2004117 D

REVISIONS 19217						
SYM	ZONE	DESCRIPTION	BY	CHK	DATE	APPROVED
A		REVISED PER TDRR 20286				
B		REVISED PER TDRR 21250				
C		REVISED PER TDRR 22617				
D		REVISED PER TDRR 23146				

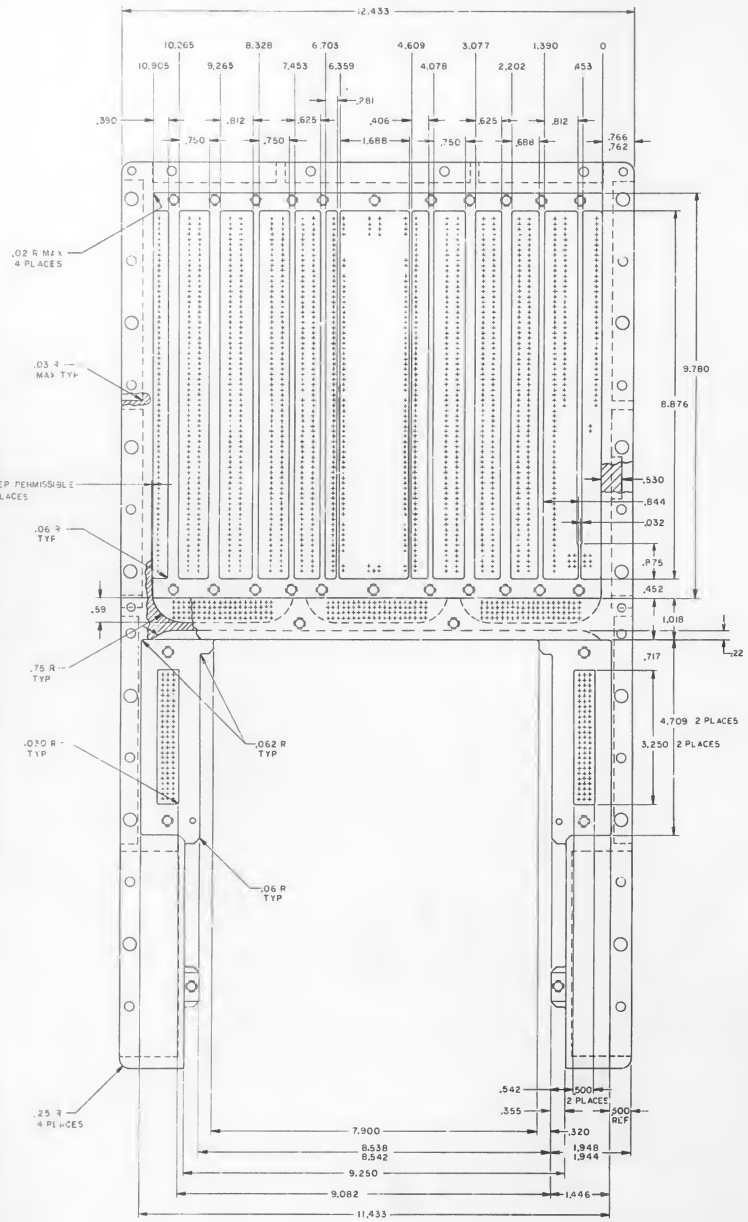

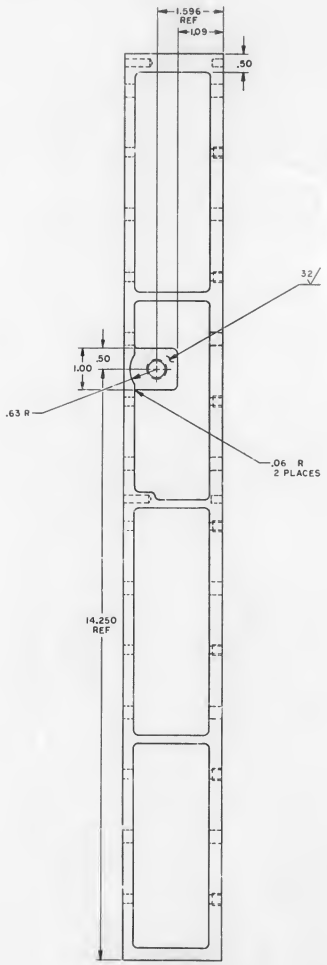

QTY REQD	PART OR IDENTIFYING NO.	NOMENCLATURE OR DESCRIPTION	FIND NO.
		LIST OF MATERIALS	

UNLESS OTHERWISE SPECIFIED DIMENSIONS ARE IN INCHES CAPACITOR VALUES ARE IN µf RESISTOR VALUES ARE IN OHMS TOLERANCES ON FRACTIONS DECIMALS ANGLES ± ± ± DO NOT SCALE THIS DRAWING

MATERIAL

NEXT ASSY USED ON

APPLICATION

MIT INSTRUMENTATION LAB CAMBRIDGE MASS

MANNED SPACECRAFT CENTER HOUSTON, TEXAS

DRAWN 17-Feb-66
CHECKED 17-Feb-66
APPROVED 17-Feb-66
APPROVED 23-May-66

APPROVED MIT 23 May
APPROVED NASA 7 Feb

TRAY B
INSEPARABLE ASSY
AGC

CODE IDENT NO. 80230 SIZE J DRAWING NO. 2004117

SCALE 1/1 SHEET 2 OF 2

2004117

REVISIONS 20043

SYM	ZONE	DESCRIPTION	DR	CHK	DATE	APPROVED
A		REVISED PER TDRR 21340	CMB	RPK	24AUG65	WIC

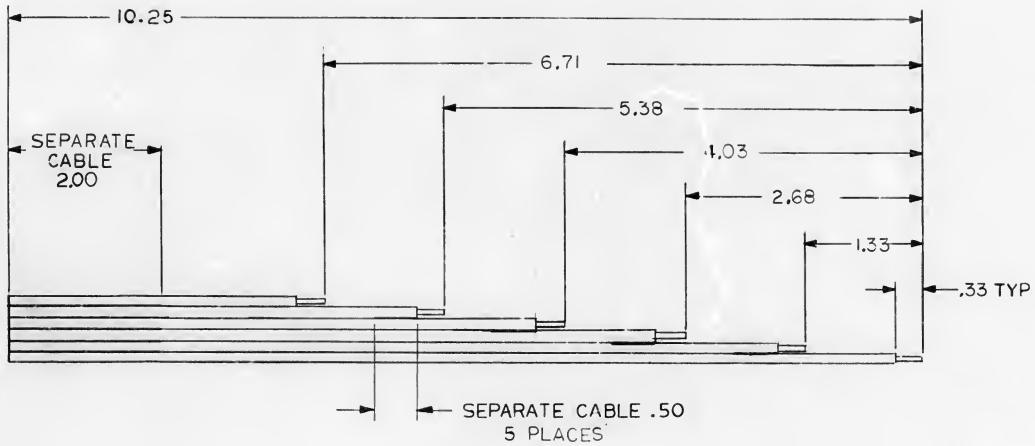

NOTES:
1. INTERPRET DRAWING IN ACCORDANCE WITH STANDARDS PRESCRIBED BY MIL-D-70327
2. MAKE FROM 1006343-001
3. IDENTIFY WITH DRAWING NO. AND REVISION PER ND1002019

QTY REQD	PART OR IDENTIFYING NO.	NOMENCLATURE OR DESCRIPTION	FIND NO.

LIST OF MATERIALS

2003053	
NEXT ASSY	USED ON
APPLICATION	

UNLESS OTHERWISE SPECIFIED
DIMENSIONS ARE IN INCHES
CAPACITOR VALUES ARE IN μf
RESISTOR VALUES ARE IN OHMS
TOLERANCES ON
FRACTIONS ± —— DECIMALS ±.03 ANGLES ± ——
DO NOT SCALE THIS DRAWING

MATERIAL
SEE NOTE 2

MIT INSTRUMENTATION LAB
CAMBRIDGE, MASS.

DRAWN D Black 27APR65
CHECKED R P Engelburg 21May65
APPROVED F O Jordan 27MAY65
APPROVED Eldon C Hall 3 June 65
APPROVED MIT W Kemper for Shades
APPROVED MSC R Michael 4/6/65
DATE

MANNED SPACECRAFT CENTER
HOUSTON, TEXAS

FLAT CABLE
FIXED MEMORY MODULE

CODE IDENT NO.	SIZE	DRAWING NO.
80230	C	2004119
SCALE NONE		SHEET 1 OF 1

2004119 A

REVISIONS 20043

SYM	ZONE	DESCRIPTION	DR	CHK	DATE	APPROVED	
A		REVISED PER TDRR 21340			29 AUG 65		
B		REVISED PER TDRR 28624					6-16-66

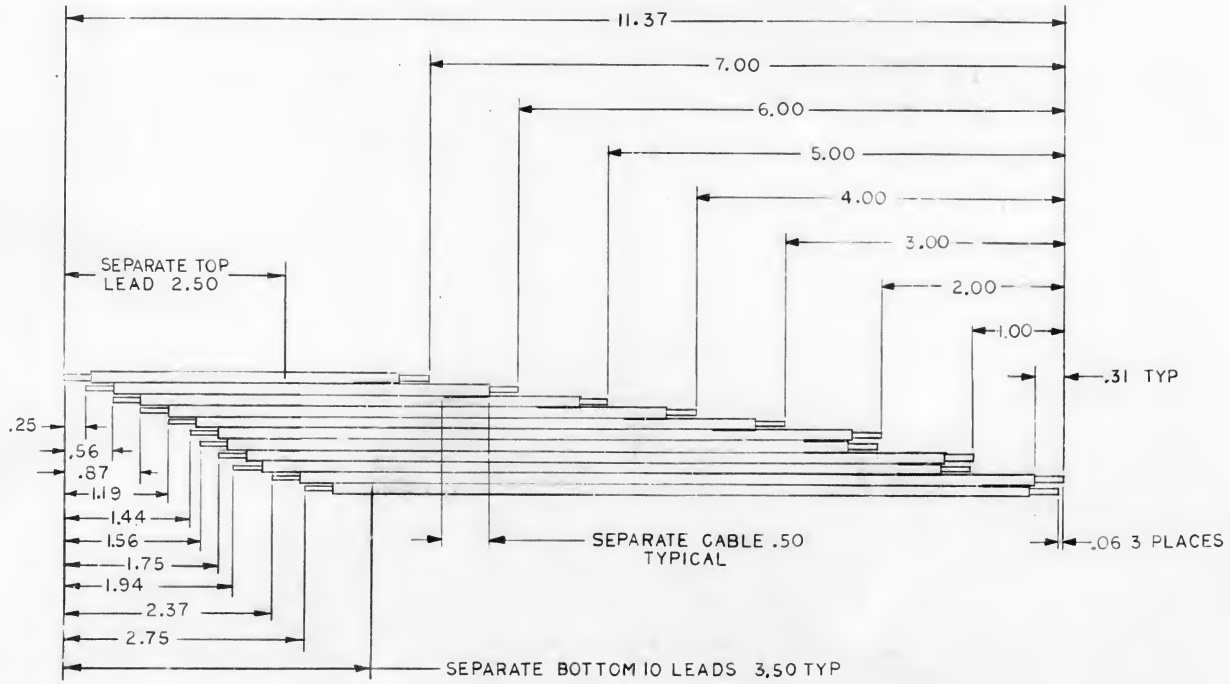

NOTES:
1. INTERPRET DRAWING IN ACCORDANCE WITH STANDARDS PRESCRIBED BY MIL-D-70327
2. MAKE FROM 1006343-002
3. IDENTIFY WITH PART NO. PER ND1002019

QTY REQD	PART OR IDENTIFYING NO.	NOMENCLATURE OR DESCRIPTION	FIND NO.

LIST OF MATERIALS

2003053	
NEXT ASSY	USED ON
APPLICATION	

UNLESS OTHERWISE SPECIFIED DIMENSIONS ARE IN INCHES
CAPACITOR VALUES ARE IN µf
RESISTOR VALUES ARE IN OHMS
TOLERANCES ON
FRACTIONS ± — DECIMALS ±.03 ANGLES ± —
DO NOT SCALE THIS DRAWING

MATERIAL
SEE NOTE 2

MIT INSTRUMENTATION LAB
CAMBRIDGE, MASS.

DRAWN D. Gleck 27APR65
CHECKED 28APR65
APPROVED 21 May 65
APPROVED 3 June 65
APPROVED MIT 6/8/66
APPROVED MSC DATE

MANNED SPACECRAFT CENTER
HOUSTON, TEXAS

FLAT CABLE
FIXED MEMORY MODULE

CODE IDENT NO.	SIZE	DRAWING NO
80230	C	2004120

SCALE NONE

SHEET 1 OF 1

2004120 B

REVISIONS 20043

SYM	ZONE	DESCRIPTION	DR	CHK	DATE	APPROVED	
A		REVISED PER TDRR 21340	RB	RPK	29 AUG 65	WH	
B		REVISED PER TDRR 28624	RB	RPK		FR	6-16-65
C		REVISED PER TDRR 30417	BJP	C.D.		FR	10 May 66

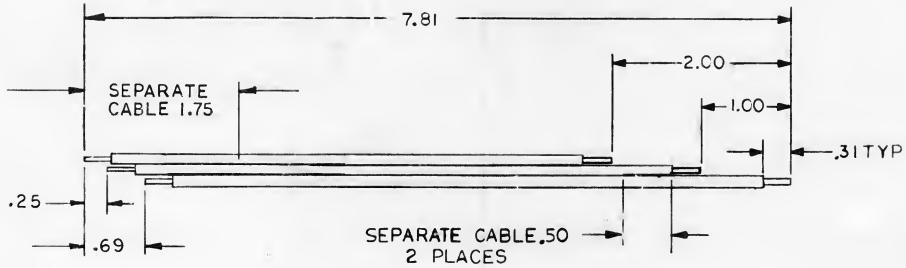

NOTES:
1. INTERPRET DRAWING IN ACCORDANCE WITH STANDARDS PRESCRIBED BY MIL-D-70327
2. MAKE FROM 1006343-003
3. IDENTIFY WITH PART NO. PER ND1002019

QTY REQD	PART OR IDENTIFYING NO.	MATERIAL OR NOTES	NOMENCLATURE OR DESCRIPTION	FIND NO.

LIST OF MATERIALS

2003972	
2003053	
NEXT ASSY	USED ON
APPLICATION	

UNLESS OTHERWISE SPECIFIED
DIMENSIONS ARE IN INCHES
CAPACITOR VALUES ARE IN μf
RESISTOR VALUES ARE IN OHMS
TOLERANCES ON
FRACTIONS ± — DECIMALS ±.03 ANGLES ± —
DO NOT SCALE THIS DRAWING

MATERIAL
SEE NOTE 2

MIT INSTRUMENTATION LAB
CAMBRIDGE, MASS.

DRAWN D. Black 27APR65
CHECKED R.P. Kingsbury 27 May 65
APPROVED T. O. Sandell 27 May 65
APPROVED Edwin C. Hall 3 June 65
APPROVED MIT W. Stephen 8 Jun 65
APPROVED MSC T. Mikulak 6/8/65
DATE

MANNED SPACECRAFT CENTER
HOUSTON, TEXAS

FLAT CABLE
FIXED MEMORY MODULE

CODE IDENT NO. 80230 | SIZE C | DRAWING NO. 2004121

SCALE NONE | SHEET 1 OF 1

2004121 C

REVISIONS 20043

SYM	ZONE	DESCRIPTION	DR	CHK	DATE	APPROVED
A		REVISED PER TDRR 21340			24 Aug 65	
B		REVISED PER TDRR 28624				6/16/66

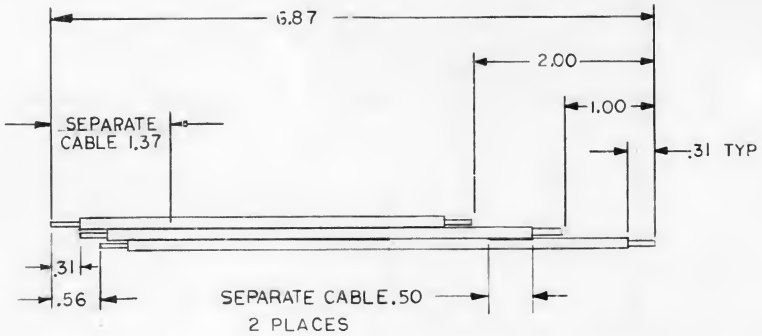

NOTES

1. INTERPRET DRAWING IN ACCORDANCE WITH STANDARDS PRESCRIBED BY MIL-D-70327
2. MAKE FROM 1006343-003
3. IDENTIFY WITH PART NO. PER ND100219

QTY REQD	PART OR IDENTIFYING NO.	NOMENCLATURE OR DESCRIPTION	FIND NO.

LIST OF MATERIALS

2003053	
NEXT ASSY	USED ON
APPLICATION	

UNLESS OTHERWISE SPECIFIED
DIMENSIONS ARE IN INCHES
CAPACITOR VALUES ARE IN μf
RESISTOR VALUES ARE IN OHMS
TOLERANCES ON
FRACTIONS ± —— DECIMALS ± .03 ANGLES ± ——
DO NOT SCALE THIS DRAWING

MATERIAL

SEE NOTE 2

MIT INSTRUMENTATION LAB
CAMBRIDGE, MASS

DRAWN D. Gleason 27APR65
CHECKED 27Apr65
APPROVED 27APR65
APPROVED 3 June 65
APPROVED MIT 8 Jun 65
APPROVED MSC 6/1/65
DATE

MANNED SPACECRAFT CENTER
HOUSTON, TEXAS

FLAT CABLE
FIXED MEMORY MODULE

CODE IDENT NO. 80230 | SIZE C | DRAWING NO. 2004122

SCALE NONE | SHEET 1 OF 1

2004122 B

REVISIONS 2004123

SYM	ZONE	DESCRIPTION	DR	CHK	DATE	APPROVED
A		REVISED PER TDRR 21340	RB	RPK	24AUG65	WJK
B		REVISED PER TDRR 28624				SJK 6/16/66

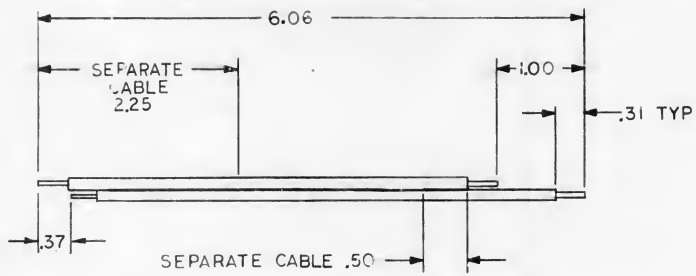

NOTES:
1. INTERPRET DRAWING IN ACCORDANCE WITH STANDARDS PRESCRIBED BY MIL-D-70327
2. MAKE FROM 1006343-004
3. IDENTIFY WITH PART NO. PER ND1002019

QTY REQD	PART OR IDENTIFYING NO.	NOMENCLATURE OR DESCRIPTION	FIND NO.

LIST OF MATERIALS

2003053	
NEXT ASSY	USED ON
APPLICATION	

UNLESS OTHERWISE SPECIFIED
DIMENSIONS ARE IN INCHES
CAPACITOR VALUES ARE IN μf
RESISTOR VALUES ARE IN OHMS
TOLERANCES ON
FRACTIONS ± — DECIMALS ±.03 ANGLES ± —
DO NOT SCALE THIS DRAWING

MATERIAL
SEE NOTE 2

MIT INSTRUMENTATION LAB
CAMBRIDGE, MASS.

DRAWN D Black 27APR65
CHECKED 21MAY65
APPROVED 27 May 65
APPROVED 3 June 65
APPROVED MIT
APPROVED MSC 6/1/66
DATE

MANNED SPACECRAFT CENTER
HOUSTON, TEXAS

FLAT CABLE
FIXED MEMORY MODULE

CODE IDENT NO. 80230 | SIZE C | DRAWING NO. 2004123
SCALE NONE | SHEET 1 OF 1

2004123 B

REVISIONS 20043

SYM	ZONE	DESCRIPTION	DR	CHK	DATE	APPROVED	
A		REVISED PER TDRR 21340	WB	AZ	24AUG65	WC	
B		REVISED PER TDRR 28624	JM	A.Z.		FJR	6/24/66
C		REVISED PER TDRR 30417	ASP	C.D.		FJR	10/24/66

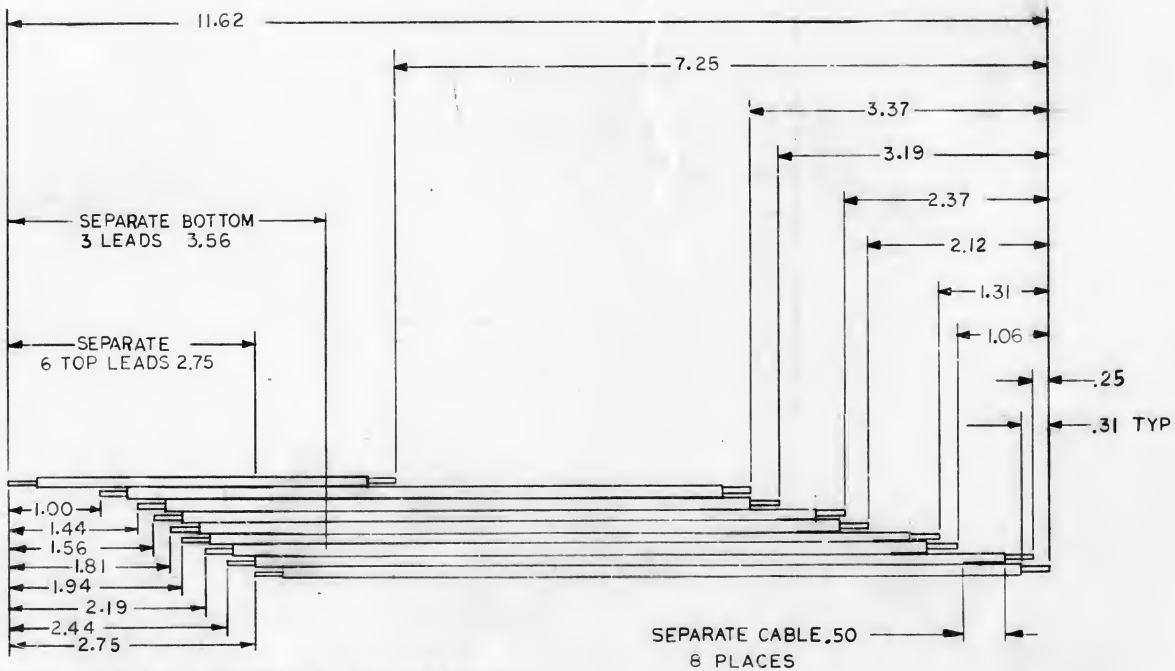

NOTES:
1. INTERPRET DRAWING IN ACCORDANCE WITH STANDARDS PRESCRIBED BY MIL-D-70327
2. MAKE FROM 1006343-005
3. IDENTIFY WITH PART NO. PER ND1002019

QTY REQD	PART OR IDENTIFYING NO.	NOMENCLATURE OR DESCRIPTION	FIND NO.

LIST OF MATERIALS

NEXT ASSY	USED ON
2003972	
2003053	

APPLICATION

UNLESS OTHERWISE SPECIFIED DIMENSIONS ARE IN INCHES
CAPACITOR VALUES ARE IN μf
RESISTOR VALUES ARE IN OHMS
TOLERANCES ON
FRACTIONS ± — DECIMALS ±.03 ANGLES ± —
DO NOT SCALE THIS DRAWING

MATERIAL: SEE NOTE 2

MIT INSTRUMENTATION LAB
CAMBRIDGE, MASS.

DRAWN D. Black 27APR65
CHECKED R.P. Jacobson 27Apr65
APPROVED D. Andrew 27Apr65
APPROVED Allen C. Hall 3 June 65
APPROVED MIT W. Cooper 8/4/65
APPROVED MSC F. Michaud 8/4/65
DATE

MANNED SPACECRAFT CENTER
HOUSTON, TEXAS

FLAT CABLE
FIXED MEMORY MODULE

CODE IDENT NO. 80230 | SIZE C | DRAWING NO. 2004124
SCALE NONE | SHEET 1 OF 1

2004124 C

REVISIONS 20043

SYM	ZONE	DESCRIPTION	DR	CHK	DATE	APPROVED	
A		REVISED PER TDRR 21340			24AUG65		
B		REVISED PER TDRR 28624					6/16/66
C		REVISED PER TDRR 30417					

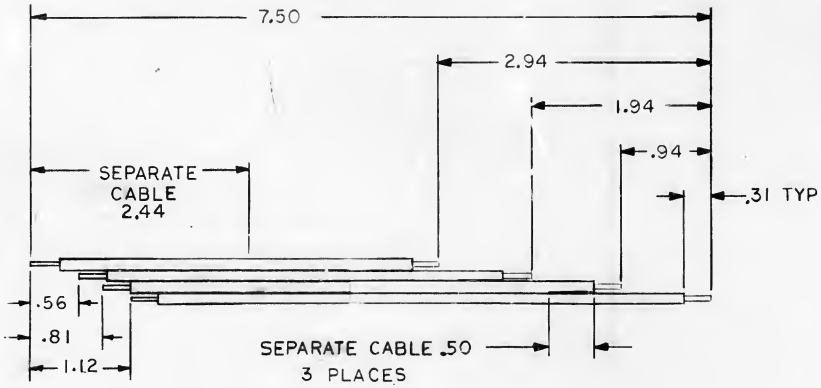

NOTES

1. INTERPRET DRAWING IN ACCORDANCE WITH STANDARDS PRESCRIBED BY MIL-D-70327
2. MAKE FROM 1006343-006
3. IDENTIFY WITH PART NO. PER ND1002019

QTY REQD	PART OR IDENTIFYING NO.	NOMENCLATURE OR DESCRIPTION	FIND NO.

LIST OF MATERIALS

2003972	
2003053	
NEXT ASSY	USED ON
APPLICATION	

UNLESS OTHERWISE SPECIFIED
DIMENSIONS ARE IN INCHES
CAPACITOR VALUES ARE IN μf
RESISTOR VALUES ARE IN OHMS
TOLERANCES ON
FRACTIONS ± —— DECIMALS ± .03 ANGLES ± ——
DO NOT SCALE THIS DRAWING

MATERIAL

SEE NOTE 2

MIT INSTRUMENTATION LAB
CAMBRIDGE, MASS.

DRAWN D Black 27APR65
CHECKED 21AUG65
APPROVED 27MAY65
APPROVED 3 June 65
APPROVED MIT 8 Jun 65
APPROVED MSC 8/16/65
DATE

MANNED SPACECRAFT CENTER
HOUSTON, TEXAS

FLAT CABLE

FIXED MEMORY MODULE

CODE IDENT NO.	SIZE	DRAWING NO.
80230	C	2004125

SCALE NONE SHEET 1 OF 1

2004125 C

REVISIONS 21166						
SYM	ZONE	DESCRIPTION	DR	CHK	DATE	APPPOVED

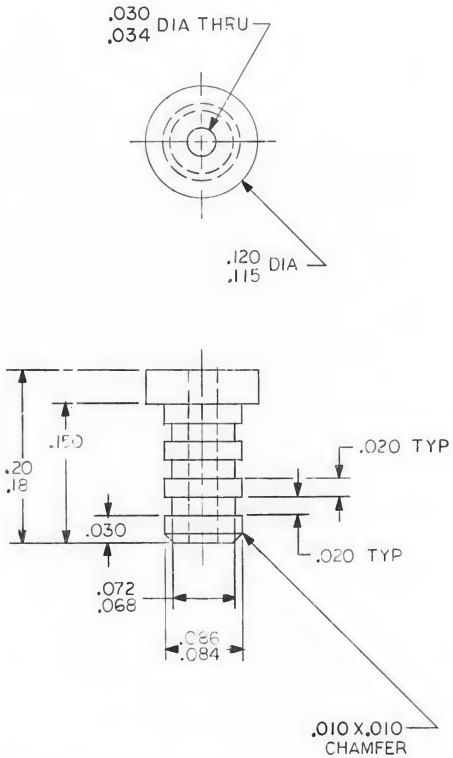

NOTES:
1. INTERPRET DRAWING IN ACCORDANCE WITH STANDARDS PRESCRIBED BY MIL-D-70327
2. MATERIAL: POLYTETRAFLUOROETHYLENE (TEFLON) PER MIL-P-19468 TYPE TFE

QTY REQD	PART OR IDENTIFYING NO.	NOMENCLATURE OR DESCRIPTION	FIND NO.

LIST OF MATERIALS

2003063	
2003062	
NEXT ASSY	USED ON
APPLICATION	

UNLESS OTHERWISE SPECIFIED
DIMENSIONS ARE IN INCHES
CAPACITOR VALUES ARE IN μf
RESISTOR VALUES ARE IN OHMS
TOLERANCES ON
FRACTIONS ± —— DECIMALS ±.005 ANGLES ± ——
DO NOT SCALE THIS DRAWING

MATERIAL
SEE NOTE 2

MIT INSTRUMENTATION LAB
CAMBRIDGE, MASS.

MANNED SPACECRAFT CENTER
HOUSTON, TEXAS

DRAWN	David A Lowe	APR '29 65
CHECKED	A. Lindstrom	8 July 65
APPROVED		
APPROVED	Eldon C Hall	9 July 65
APPROVED MIT	W Fujer	27 Jul 65
APPROVED MSC	[illegible]	7/27/65

DATE

BUSHING
AGC

CODE IDENT NO.	SIZE	DRAWING NO.
80230	C	2004127
SCALE 10/1		SHEET 1 OF 1

2004127

REVISIONS 20043

SYM	ZONE	DESCRIPTION	DR	CHK	DATE	APPROVED
A		REVISED PER TDRR 21340	90	RPK	29 AUG 65	WR

NOTES:

1. INTERPRET DRAWING IN ACCORDANCE WITH STANDARDS PRESCRIBED BY MIL-D-70327
2. MAKE FROM 1006343-007
3. IDENTIFY WITH DRAWING NO. AND REVISION PER ND 1002019

QTY REQD	PART OR IDENTIFYING NO.	NOMENCLATURE OR DESCRIPTION	FIND NO.

LIST OF MATERIALS

2003053	
NEXT ASSY	USED ON
APPLICATION	

UNLESS OTHERWISE SPECIFIED
DIMENSIONS ARE IN INCHES
CAPACITOR VALUES ARE IN μf
RESISTOR VALUES ARE IN OHMS
TOLERANCES ON
FRACTIONS ± — DECIMALS ±.010 ANGLES ± —
DO NOT SCALE THIS DRAWING

MATERIAL

SEE NOTE 2

MIT INSTRUMENTATION LAB
CAMBRIDGE, MASS.

DRAWN 6 MAY 65
CHECKED 7 MAY 65
APPROVED 7 MAY 65
APPROVED 3 JUNE 65
APPROVED MIT 8 JUN 65
APPROVED MSC 6/1/65
DATE

MANNED SPACECRAFT CENTER
HOUSTON, TEXAS

FLAT CABLE INTERCONNECTION FIXED MEMORY MODULE

CODE IDENT NO. 80230 | SIZE C | DRAWING NO. 2004129

SCALE 4/1 | SHEET 1 OF 1

REVISIONS 21166

SYM	ZONE	DESCRIPTION	DR	CHK	DATE	APPROVED

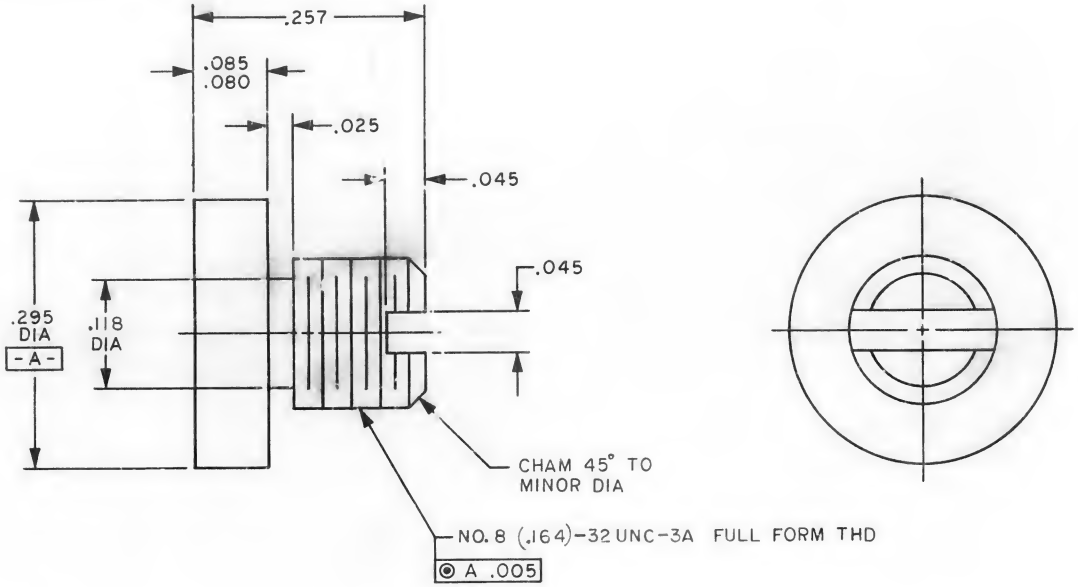

NOTES:

1. INTERPRET DRAWING IN ACCORDANCE WITH STANDARDS PRESCRIBED BY MIL-D-70327
2. MATERIAL: CRES PER QQ-S-763, CLASS 416, COND A
3. UNLESS OTHERWISE SPECIFIED ALL FILLETS AND RADII .010 MAX
4. REMOVE BURRS AND SHARP EDGES .005/.015
5. ALL SURFACES 125/ UNLESS OTHERWISE SPECIFIED
6. FINISH: PASSIVATE PER MIL-F-14072, FINISH E300, TYPE II

QTY REQD	PART OR IDENTIFYING NO.	NOMENCLATURE OR DESCRIPTION	FIND NO.

LIST OF MATERIALS

2003100	
NEXT ASSY	USED ON
APPLICATION	

UNLESS OTHERWISE SPECIFIED
DIMENSIONS ARE IN INCHES
CAPACITOR VALUES ARE IN μf
RESISTOR VALUES ARE IN OHMS
TOLERANCES ON

FRACTIONS	DECIMALS	ANGLES
± —	±.005	±1°

DO NOT SCALE THIS DRAWING

MATERIAL
SEE NOTE 2

MIT INSTRUMENTATION LAB
CAMBRIDGE, MASS.

DRAWN Ken Healy 11 May 65
CHECKED R. Lindblom 8 July 65
APPROVED
APPROVED Edwin C. Hall 20 July 65
APPROVED MIT W. Swigler 7 July 65
APPROVED MSC 7/27/65
DATE

MANNED SPACECRAFT CENTER
HOUSTON, TEXAS

PAD, THREADED
AGC

CODE IDENT NO	SIZE	DRAWING NO.
80230	C	2004130

SCALE 10/1 SHEET 1 OF 1

REVISIONS 20615						
SYM	ZONE	DESCRIPTION	DR	CHK	DATE	APPROVED

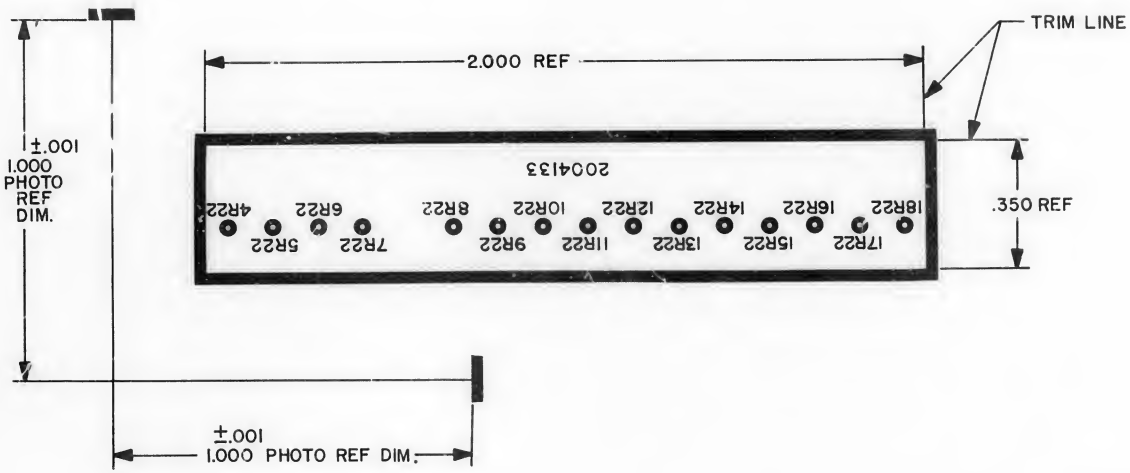

NOTES:

1. INTERPRET DRAWING IN ACCORDANCE WITH STANDARDS PRESCRIBED BY MIL-D-70327
2. MATERIAL: FILM .006/.008 THICK SENSITIZED DIMENSIONALLY STABLE PER L-F-340, TYPE IB, CLASS 2, STYLE IA
3. ORIGINAL OF THIS DRAWING OR REPRODUCTION MADE BY A PROCESS OR METHOD SHALL INSURE DIMENSIONAL STABILITY
4. MAKE MASTER PATTERN POSITIVE FILMS TO DIMENSIONS SHOWN
5. CUT TO WITHIN .010 OF TRIM LINE
6. ● .040/.050 DIA HOLE

NEXT ASSY	USED ON
2003067	

APPLICATION

UNLESS OTHERWISE SPECIFIED
DIMENSIONS ARE IN INCHES
CAPACITOR VALUES ARE IN μf
RESISTOR VALUES ARE IN OHMS
TOLERANCES ON
FRACTIONS ± — DECIMALS ± — ANGLES ± —
DO NOT SCALE THIS DRAWING

MATERIAL
SEE NOTE 2

QTY REQD	PART OR IDENTIFYING NO.	NOMENCLATURE OR DESCRIPTION	FIND NO.

LIST OF MATERIALS

MIT INSTRUMENTATION LAB
CAMBRIDGE, MASS.

DRAWN C. F. Welch 21 May 65
CHECKED R. Bidonis 29 JUN 65
APPROVED [illegible] 28 JUNE 65
APPROVED Eldon C. Hall 28 June 65
APPROVED MIT [illegible] 7/6/65
APPROVED MSC [illegible] 7/9
DATE

MANNED SPACECRAFT CENTER
HOUSTON, TEXAS

INSULATOR C PHOTOGRAPHIC MASTER

INTERFACE MODULE A27-29

CODE IDENT NO.	SIZE	DRAWING NO.
80230	C	2004133

SCALE 4/1 SHEET 1 OF 1

2004133

REVISIONS						
SYM	ZONE	DESCRIPTION	BY	CHK	DATE	APPROVED

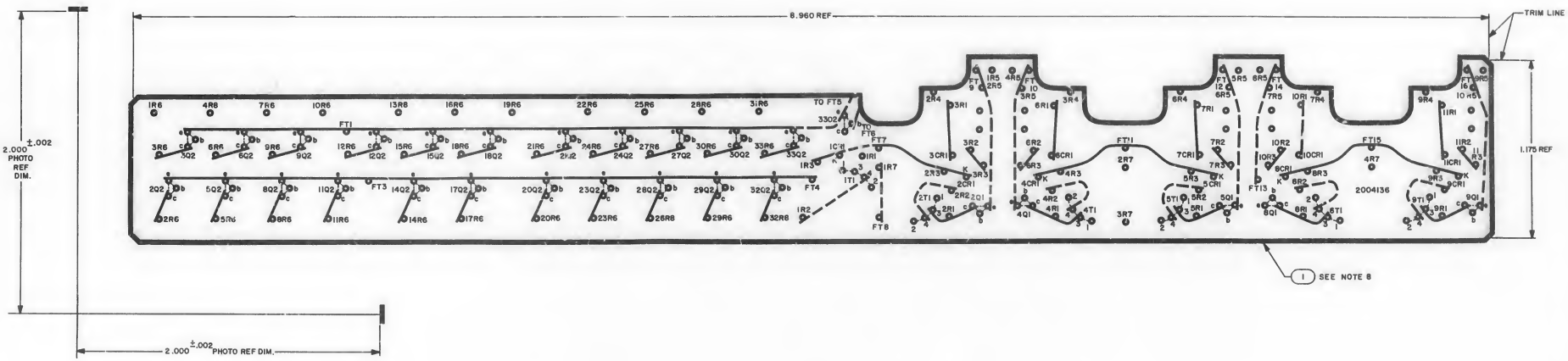

NOTES:

1. INTERPRET DRAWING IN ACCORDANCE WITH STANDARDS PRESCRIBED BY MIL-D-70327
2. MATERIAL: FILM .006/.008 THK SENSITIZED DIMENSIONALLY STABLE PER L-F-340, TYPE IB, CLASS 2 STYLE IA
3. ORIGINAL OF THIS DRAWING OR REPRODUCTION MADE BY A PROCESS OR METHOD SHALL INSURE DIMENSIONAL STABILITY
4. MAKE MASTER PATTERN POSITIVE FILMS TO DIMENSIONS SHOWN
5. CUT TO WITHIN .010 OF TRIM LINE
6. ⊙ .040/.050 DIA HOLE
7. BROKEN LINE DENOTES SLEEVING
8. APPLY FIND NO. 2 TO FAR SIDE OF FIND NO. 1

QTY REQD	PART OR IDENTIFYING NO	NOMENCLATURE OR DESCRIPTION	FIND NO
AR	1006318	ADHESIVE	2
1	2004136-001	INSULATOR	1

-011 LIST OF MATERIALS

2003070		
NEXT ASSY	USED ON	
APPLICATION		

UNLESS OTHERWISE SPECIFIED DIMENSIONS ARE IN INCHES
CAPACITOR VALUES ARE IN μf
RESISTOR VALUES ARE IN OHMS
TOLERANCES ON
FRACTIONS ± DECIMALS ± ANGLES ±
DO NOT SCALE THIS DRAWING

MATERIAL
SEE NOTE 2

MIT INSTRUMENTATION LAB
CAMBRIDGE, MASS

DRAWN 4/26/65
CHECKED 4/26/65
APPROVED 4/26/65
APPROVED 4/26/65
APPROVED MIT
APPROVED MSC
DATE

MANNED SPACECRAFT CENTER
HOUSTON, TEXAS

INSULATOR A
PHOTOGRAPHIC MASTER
INTERFACE MODULE A25-25

CODE IDENT NO 80230 | SIZE E | DRAWING NO. 2004136

SCALE 4/1 | SHEET | OF 1

REVISIONS					
SYM	ZONE	DESCRIPTION	DR	CHK	DATE	APPROVED

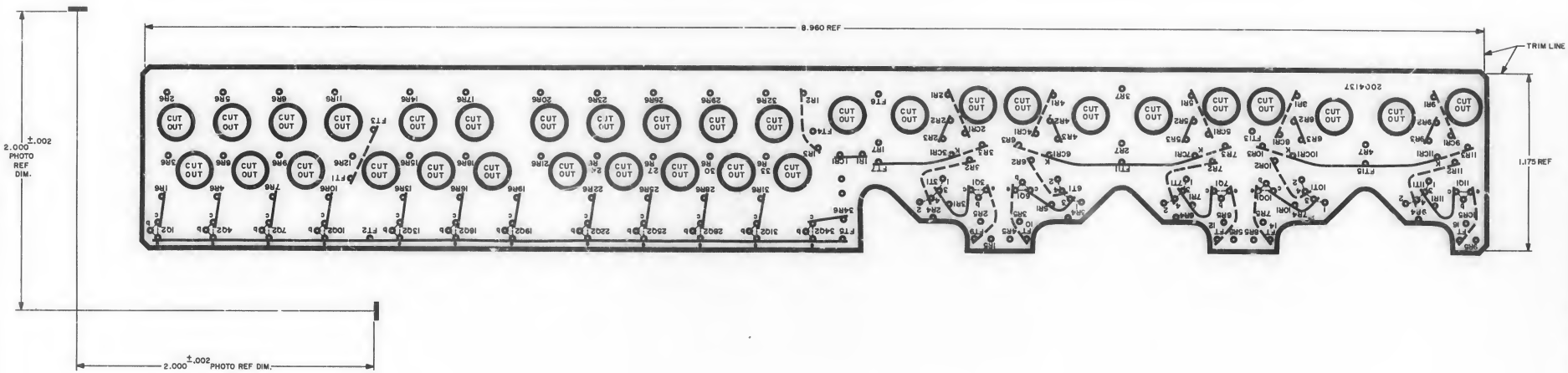

NOTES:

1. INTERPRET DRAWING IN ACCORDANCE WITH STANDARDS PRESCRIBED BY MIL-D-70327
2. MATERIAL: FILM, .006/.008 THK SENSITIZED DIMENSIONALLY STABLE PER L-F-340, TYPE 70, CLASS 2, STYLE IA
3. ORIGINAL OF THIS DRAWING OR REPRODUCTION MADE BY A PROCESS OR METHOD SHALL INSURE DIMENSIONAL STABILITY
4. MAKE MASTER PATTERN POSITIVE FILMS TO DIMENSIONS SHOWN
5. CUT TO WITHIN .010 OF TRIM LINE
6. ⌀.040/.050 DIA HOLE
7. BROKEN LINE DENOTES SLEEVING
8. ALL CUTOUTS TO BE .20/.22 DIA

Q REQD	PART OR IDENTIFYING NO	NOMENCLATURE OR DESCRIPTION	FIND NO
		LIST OF MATERIALS	

UNLESS OTHERWISE SPECIFIED DIMENSIONS ARE IN INCHES CAPACITOR VALUES ARE IN µf RESISTOR VALUES ARE IN OHMS TOLERANCES ON FRACTIONS ± — DECIMALS ± — ANGLES ± — DO NOT SCALE THIS DRAWING

MATERIAL: SEE NOTE 2

2003070 — NEXT ASSY — USED ON — APPLICATION

MIT INSTRUMENTATION LAB, CAMBRIDGE MASS

MANNED SPACECRAFT CENTER, HOUSTON, TEXAS

DRAWN 4/4/65 — CHECKED 4/4/65 — APPROVED — APPROVED MIT — APPROVED MSC — DATE

INSULATOR B PHOTOGRAPHIC MASTER

INTERFACE MODULE A25-26

CODE IDENT NO 80230 — SIZE E — DRAWING NO. 2004137

SCALE 4/1 — SHEET 1 OF 1

2004137

REVISIONS 21166						
SYM	ZONE	DESCRIPTION	DR	CHK	DATE	APPROVED

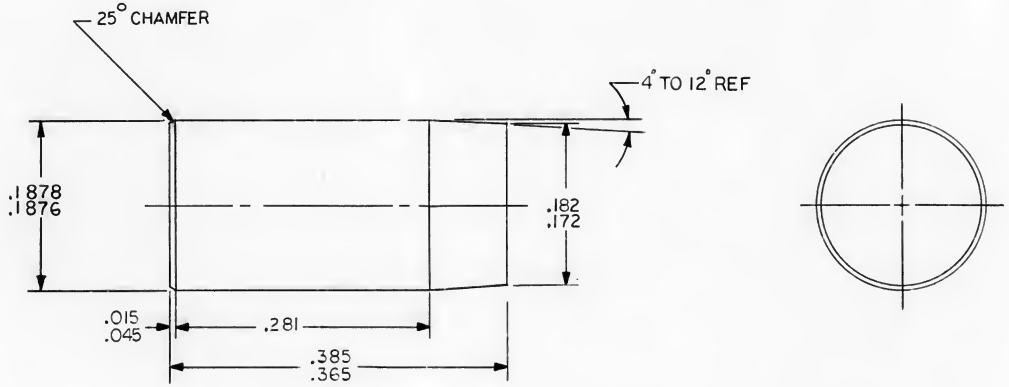

NOTES:
1. INTERPRET DRAWING IN ACCORDANCE WITH STANDARDS PRESCRIBED BY MIL-D-70327
2. MATERIAL: CRES PER QQ-S-763 CLASS 416 COND A
3. PASSIVATE PER MIL-F-14072 FINISH E 300 TYPE II
4. IDENTIFY WITH DRAWING NO. AND REVISION PER ND 1002019

QTY REQD	PART OR IDENTIFYING NO.	NOMENCLATURE OR DESCRIPTION	FIND NO.

LIST OF MATERIALS

2003074	
NEXT ASSY	USED ON
APPLICATION	

UNLESS OTHERWISE SPECIFIED DIMENSIONS ARE IN INCHES
CAPACITOR VALUES ARE IN μf
RESISTOR VALUES ARE IN OHMS
TOLERANCES ON
FRACTIONS ± ——— DECIMALS ±.005 ANGLES ±5°
DO NOT SCALE THIS DRAWING

MATERIAL
SEE NOTE 2

MIT INSTRUMENTATION LAB
CAMBRIDGE, MASS.

DRAWN 2 June 65
CHECKED 9 July 65
APPROVED
APPROVED 20 July 65
APPROVED MIT 27 July 65
APPROVED MSC 1/27/66
DATE

MANNED SPACECRAFT CENTER
HOUSTON, TEXAS

PIN HEADLESS DOWEL

CODE IDENT NO. 80230
SIZE C
DRAWING NO. 2004139
SCALE 10/1
SHEET 1 OF 1

REVISIONS						
SYM	ZONE	DESCRIPTION	DR	CHK	DATE	APPROVED
A		REVISED PER TDRR 20865				

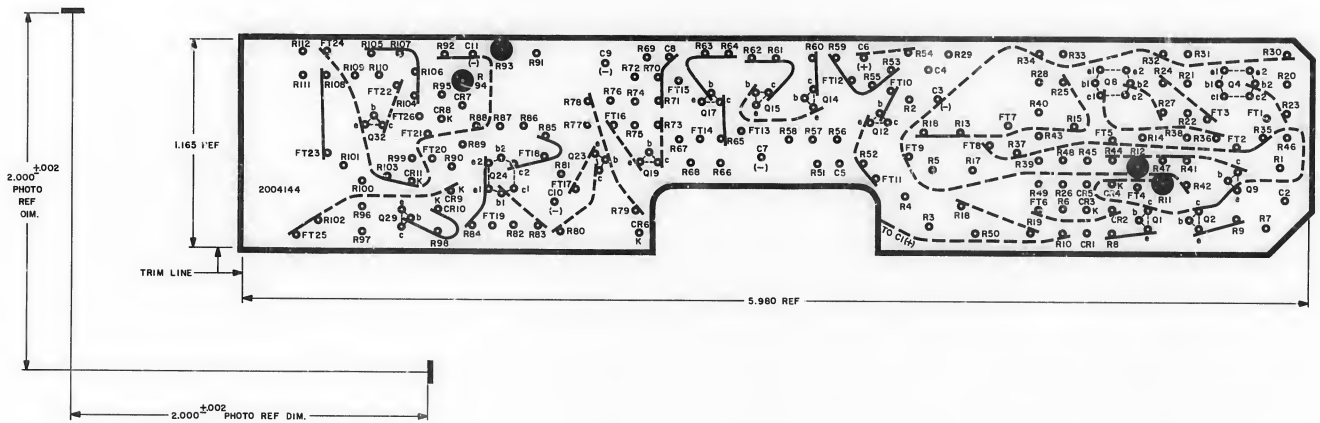

NOTES

1. INTERPRET DRAWING IN ACCORDANCE WITH STANDARDS PRESCRIBED BY MIL-D-70327
2. MATERIAL: FILM, .006/.008 THICK SENSITIZED DIMENSIONALLY STABLE PER L-F-340, TYPE 18, CLASS 2, STYLE 1A
3. ORIGINAL OF THIS DRAWING OR REPRODUCTION MADE BY A PROCESS OR METHOD SHALL INSURE DIMENSIONAL STABILITY
4. CUT TO WITHIN .010 OF TRIMLINE
5. BROKEN LINE DENOTES SLEEVING
6. ● .040/.050 DIA HOLE
7. ● .120/.130 DIA HOLE
8. MAKE MASTER PATTERN POSITIVE FILM TO DIMENSIONS SHOWN

QTY REQD	PART OR IDENTIFYING NO	NOMENCLATURE OR DESCRIPTION
		LIST OF MATERIALS

UNLESS OTHERWISE SPECIFIED DIMENSIONS ARE IN INCHES
CAPACITOR VALUES ARE IN μf
RESISTOR VALUES ARE IN OHMS
TOLERANCES ON
FRACTIONS ± DECIMALS ± ANGLES ±
DO NOT SCALE THIS DRAWING

MATERIAL: SEE NOTE 2

NEXT ASSY	USED ON
2003069	

APPLICATION

MIT INSTRUMENTATION LAB
CAMBRIDGE, MASS

MANNED SPACECRAFT CENTER
HOUSTON, TEXAS

DRAWN Ed Devaris
CHECKED
APPROVED
APPROVED
APPROVED MIT
APPROVED MSC
DATE

INSULATOR A PHOTOGRAPHIC MASTER
ALARM MODULE

CODE IDENT NO 80230 | SIZE E | DRAWING NO. 2004144
SCALE 4/1 | SHEET 1 OF

REVISIONS 22892

SYM	ZONE	DESCRIPTION	DR	CHK	DATE	APPROVED
A		REVISED PER TDRR 24696	[illegible]	[illegible]	1/6/66	[illegible]
B		REVISED PER TDRR 25976	[illegible]	[illegible]	2/11/66	[illegible]
C		REVISED PER TDRR 26769	[illegible]	[illegible]	3/8/66	[illegible]
D		REVISED PER TDRR 28477	[illegible]	[illegible]	5/25/66	E.S.S.
E		REVISED PER TDRR 29143	PB	[illegible]	6-16-66	[illegible]

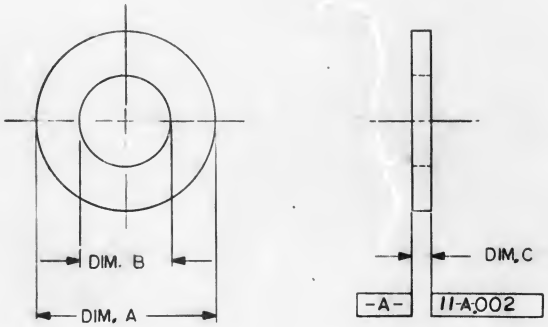

CHART A				
PART NO.	DIM. A	DIM. B	DIM. C	FINISH
2004148-001	.504/.500	.260/.265	.034/.030	SEE NOTE 5
2004148-002	.504/.500	.260/.265	.064/.060	SEE NOTE 5
2004148-003	.282/.262	.143/.153	.032/.028	SEE NOTE 5
2004148-004	.600/.590	.395/.385	.036/.028	SEE NOTE 7
2004148-005	.314/.304	.169/.179	.030/.025	SEE NOTE 5
2004148-006	.364/.354	.195/.205	.034/.030	SEE NOTE 5
2004148-007	.314/.304	.169/.179	.006/.008	SEE NOTE 5
2004148-008	.443/.433	.215/.225	.034/.030	SEE NOTE 5
2004148-009	.364/.354	.215/.225	.034/.030	SEE NOTE 5

NOTES:

1. INTERPRET DRAWING IN ACCORDANCE WITH STANDARDS PRESCRIBED BY MIL-C-70327
2. MATERIAL: 6061-T6 AL PER QQ-A-250/11, TEMP 6
3. ALL SURFACES 63√ UNLESS OTHRWISE SPECIFIED
4. REMOVE BURRS AND SHARP EDGES .010 MAX
5. CHROMATE PER MIL-C-5541, TYPE II, GRADE C, CLASS 3
6. IDENTIFY WITH PART NO. PER ND1002019
7. ANODIZE PER MIL-A-8625, TYPE I, CLEAR

NEXT ASSY	USED ON
2007322	
6007200	
6007000	
2007222	
6003001	
2003101	

APPLICATION

UNLESS OTHERWISE SPECIFIED
DIMENSIONS ARE IN INCHES
CAPACITOR VALUES ARE IN μf
RESISTOR VALUES ARE IN OHMS
TOLERANCES ON
FRACTIONS ± ——— DECIMALS ± ——— ANGLES ± ———
DO NOT SCALE THIS DRAWING

MATERIAL
SEE NOTE 2

QTY REQD	PART OR IDENTIFYING NO.	NOMENCLATURE OR DESCRIPTION	FIND NO.

LIST OF MATERIALS

MIT INSTRUMENTATION LAB
CAMBRIDGE, MASS.

DRAWN [illegible] 7/22/65
CHECKED [illegible] 23 Jul 65
APPROVED [illegible] 5 Oct 65
APPROVED [illegible] 9 Oct 65
APPROVED MIT [illegible] 5 Oct 65
APPROVED NASA NOT REQUIRED PER LETTER PP7-65-612 DATE

MANNED SPACECRAFT CENTER
HOUSTON, TEXAS

WASHER, FLAT

CODE IDENT NO. 80230 | SIZE C | DRAWING NO. 2004148

SCALE 4/1 | SHEET 1 OF 1

2004148 E

REVISIONS

SYM	ZONE	DESCRIPTION	DR	CHK	DATE	APPROVED
A		REDRAWN & REVISED PER 32544	R.D.J.	LHC	2 Feb 67	

PART NO.	DOT COLOR		MARKING INK	DIODE NO.	NOTES
2004183-001	GREEN	UNMATCHED	1006271-5	1006399	SEE NOTE 4
2004183-002	GREEN & YELLOW	MATCHED SET	1006271-5 1006271-4	1006399	SEE NOTE 4

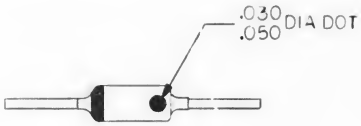

GENERAL REQUIREMENTS:

UPON COMPLETION OF ALL REQUIREMENTS AS SPECIFIED IN ND1002314 ONLY THOSE DIODES FROM LOTS WHICH QUALIFY FOR FLIGHT HARDWARE UNDER THE PROVISIONS OF ND1002314 SHALL BE MARKED AS INDICATED IN THIS DOCUMENT.

NOTES:

1. INTERPRET DRAWING IN ACCORDANCE WITH STANDARDS PRESCRIBED BY MIL-D-70327.
2. IDENTIFY WITH PART NO. PER ND1002019.
3. MATCHED SET:

   TEST FOR MATCHING: A MATCHED SET WILL HAVE A FORWARD VOLTAGE MISMATCH OF LESS THAN 3 MILLVOLTS AT 1.0 AND 3.6 MILLAMPS FORWARD CURRENT

   A MATCHED SET IS MARKED WITH AN ADDITIONAL (YELLOW) DOT FARSIDE AND THEN THE SET IS BAGGED AND TAGGED. BOTH DIODES OF A GIVEN PAIR SHALL BE FROM THE SAME LOT.
4. USE 1006399-000 OR 1006399-001.

2004183 A

QTY REQD	PART OR IDENTIFYING NO.	MATERIAL OR NOTES	NOMENCLATURE OR DESCRIPTION	FIND NO.

LIST OF MATERIALS

NEXT ASSY	USED ON
APPLICATION	

UNLESS OTHERWISE SPECIFIED
DIMENSIONS ARE IN INCHES
CAPACITOR VALUES ARE IN μf
RESISTOR VALUES ARE IN OHMS
TOLERANCES ON
FRACTIONS ± DECIMALS ± ANGLES ±
DO NOT SCALE THIS DRAWING

MATERIAL

MIT INSTRUMENTATION LAB
CAMBRIDGE, MASS.

MANNED SPACECRAFT CENTER
HOUSTON, TEXAS

DRAWN R. St. Logan 20 JAN 67
CHECKED 23 JAN 67
APPROVED
APPROVED Eldon C. Hall 24 JAN 67
APPROVED CCB 2 Feb 67
APPROVED MSC
DATE

DIODE
(FLIGHT QUALIFIED)

CODE IDENT NO. 80230 | SIZE C | DRAWING NO. 2004183

SCALE NONE | SHEET 1 OF 1

REVISIONS						
SYM	ZONE	DESCRIPTION	DR	CHK	DATE	APPROVED
A		REDRAWN & REVISED PER TDRR30418	[illegible]	[illegible]	1/26/67	[illegible]
B		REVISED PER TDRR 32580	[illegible]	[illegible]	2/7/67	[illegible]

PART NO.	FIND NO.1 TRANSISTOR NO.	DOT COLOR		MARKING INK	
2004184-001	1006323	WHITE	POTTED	1006271-1	
-002	1006323	WHITE	UNPOTTED	-1	
-003	1006323	BLUE	UNPOTTED	-6	SEE CHART A
-004	1006323	WHT&RED	POTTED	-8	SEE NOTE 5
-005	1006323	WHT&YEL	POTTED	-1,-4	SEE CHART C

GENERAL REQUIREMENT:
UPON COMPLETION OF ALL REQUIREMENTS AS SPECIFIED IN ND1002313 ONLY THOSE TRANSISTORS FROM LOTS WHICH QUALIFY FOR FLIGHT HARDWARE UNDER THE PROVISIONS OF ND1002313 SHALL BE MARKED AS INDICATED IN THIS DOCUMENT

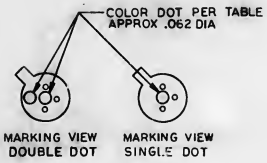

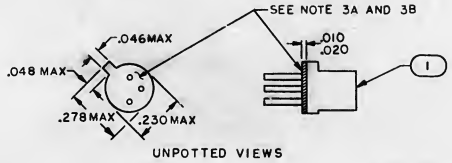

UNPOTTED VIEWS

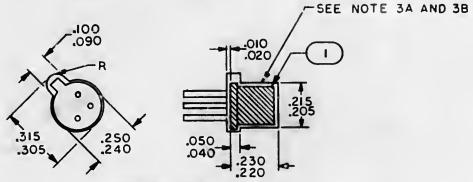

POTTED VIEWS

CHART A					
TEST	CONDITIONS	SYM	LIMITS MIN	LIMITS MAX	UNITS
D.C. CURRENT GAIN	$I_C = 0.1mA$, $V_{CE} = 1.0V$	h_{FE}	25	—	—
COLLECTOR TO BASE CUTOFF CURRENT	$V_{CB} = 8V$, $I_E = 0$	I_{CBO}	—	25	nA
COLLECTOR TO EMITTER SATURATION VOLTAGE	$I_C = 1.6MA$, $I_B = 0.5MA$	(SAT) V_{CE}	—	0.2	V

CHART B					
TEST	CONDITIONS	SYM	LIMITS MIN	LIMITS MAX	UNITS
BASE-EMITTER SATURATION VOLTAGE DIFFERENCE (ABSOLUTE VALUE)	$I_C = 500ma$, $I_B = 50ma$	$V_{BE\,SAT1}$, $V_{BE\,SAT2}$	—	0.2	VDC

CHART C (MAKE FROM 2004184-001)					
TEST	CONDITIONS	SYM	LIMITS MIN	LIMITS MAX	UNITS
COLLECTOR-EMITTER SUSTAINING VOLTAGE	$I_C = 30ma$ PULSED, $I_B = 0$	V_{CEO} SUST.	40	—	V

NOTES:
1. INTERPRET DRAWING IN ACCORDANCE WITH STANDARDS PRESCRIBED BY MIL-D-70327
2. ELECTRICAL REQUIREMENTS UNLESS OTHERWISE SPECIFIED:
   A. ALL TRANSISTORS, AFTER ENCAPSULATION, SHALL HAVE THEIR ELECTRICAL ACCEPTANCE REQUIREMENTS WITHIN THE LIMITS SET BY THE ORIGINAL SCD
3. CONSTRUCTION REQUIREMENTS:
   A. ENCAPSULATE PER ND1002183 TYPE II
   B. ALL LEADS AND HEADER TO BE FREE OF POTTING MATERIAL AND THEY SHALL NOT SHOW ANY DEFECT DUE TO THE POTTING, SUCH AS; BENDS, KINKS, PLATING DAMAGE, ETC
   C. THERE SHALL BE A MINIMUN ENCAPSULATION THICKNESS OF .003
4. IDENTIFY WITH PART NO. PER ND1002019
5. 2004184-004 IS A PAIR OF TRANSISTORS MATCHED IN ACCORDANCE WITH CHART B. AFTER MARKING AS INDICATED THE SET IS BAGGED AND TAGGED

QTY REQD	PART OR IDENTIFYING NO.	MATERIAL OR NOTES	NOMENCLATURE OR DESCRIPTION	FIND NO.
1	SEE CHART		TRANSISTOR SILICON (FLIGHT QUAL)	1

LIST OF MATERIALS

NEXT ASSY	USED ON
APPLICATION	

UNLESS OTHERWISE SPECIFIED DIMENSIONS ARE IN INCHES
CAPACITOR VALUES ARE IN μf
RESISTOR VALUES ARE IN OHMS
TOLERANCES ON
FRACTIONS ± ___ DECIMALS ± ___ ANGLES ± ___
DO NOT SCALE THIS DRAWING
MATERIAL ___

MIT INSTRUMENTATION LAB
CAMBRIDGE, MASS.

MANNED SPACECRAFT CENTER
HOUSTON, TEXAS

DRAWN	[illegible]	17 JAN 67
CHECKED	[illegible]	17 JAN 67
APPROVED		
APPROVED	[illegible]	20 JAN 67
APPROVED CCB	[illegible]	2/14/67
APPROVED MSC	[illegible]	

TRANSISTOR, SILICON (FLIGHT QUALIFIED)

CODE IDENT NO.	SIZE	DRAWING NO.
80230	D	2004184

SCALE 4/1 | DATE | SHEET 1 OF 1

2004184 B

2004678 A

REVISIONS						
SYM	ZONE	DESCRIPTION	DR	CHK	DATE	APPROVED
A		INITIAL RELEASE 70KR31573			6 Jan 69	

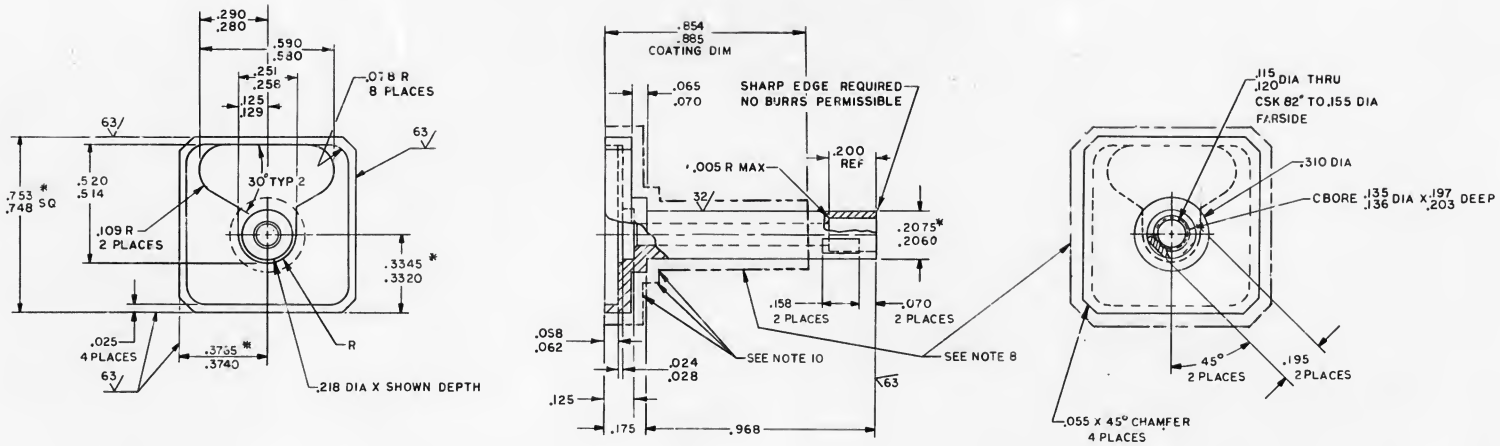

NOTES

1. MATL: 6061-T6 AL PER QQ-A-225b/8, TEMP 6
2. REMOVE BURRS AND SHARP EDGES .005 MAX UNLESS OTHERWISE SPECIFIED
3. INSIDE RADII TO BE .010 R MAX
4. ANODIZE PER MIL-A-8625, TYPE II, NOT DYED (THICKNESS OF ANODIC COATING .0003-.0004)
5. INTERPRET DRAWING IN ACCORDANCE WITH STANDARDS PRESCRIBED BY MIL-D-70327
6. IDENTIFY WITH PART NO. PER NDI002019
7. ALL SURFACES 125 UNLESS OTHERWISE SPECIFIED
8. COAT INDICATED SURFACES 0.2/0.4 MIL DRY FILM THICKNESS PER AMS 2515B, EXCEPT 0.2 MIL MINIMUM NOT REQUIRED AT SURFACE INTERSECTIONS
9. * INDICATES DIMENSIONS AFTER COATING SURFACES PER NOTE 8
10. COATING THICKNESS ON INDICATED SURFACES MAY EXCEED 0.4 MIL AS FLASHING, BUT NOT TO EXCEED 1.0 MIL.

QTY REQD	PART OR IDENTIFYING NO.	MATERIAL OR NOTES	NOMENCLATURE OR DESCRIPTION	FIND NO.

LIST OF MATERIALS

2003975	
2003925	
NEXT ASSY	USED ON

APPLICATION

UNLESS OTHERWISE SPECIFIED DIMENSIONS ARE IN INCHES
CAPACITOR VALUES ARE IN μf
RESISTOR VALUES ARE IN OHMS
TOLERANCES ON
FRACTIONS ± DECIMALS ±.005 ANGLES ± 1°
DO NOT SCALE THIS DRAWING

MATERIAL: SEE NOTE 1

MIT INSTRUMENTATION LAB
CAMBRIDGE, MASS.

MANNED SPACECRAFT CENTER
HOUSTON, TEXAS

DRAWN 18 AUG 68
CHECKED 18 AUG 68
APPROVED
APPROVED Edward C. Hall 12 Aug 68
APPROVED NASA C&B 6/6/67
APPROVED MIT MSC

SHAFT
SWITCH, PUSH BUTTON
AGC DSKY

CODE IDENT NO. 80230 | SIZE D | DRAWING NO. 2004678

DATE | SCALE 4/1 | SHEET 1 OF 1

2004678 A

REVISIONS						
SYM	ZONE	DESCRIPTION	DR	CHK	DATE	APPROVED
A		INITIAL RELEASE TDRR 32992			16 FEB 67	

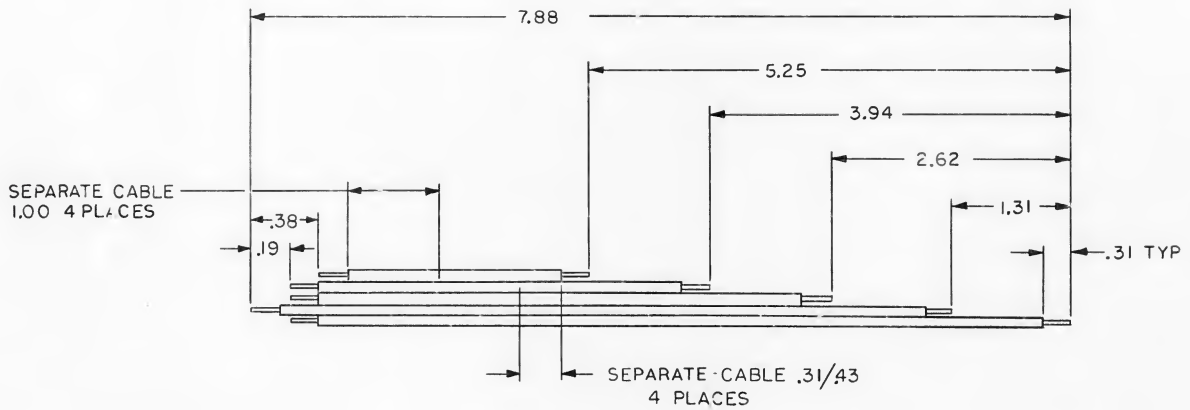

NOTES:
1. INTERPRET DRAWING IN ACCORDANCE WITH STANDARDS PRESCRIBED BY MIL-D-70327
2. MAKE FROM 1006343-001
3. IDENTIFY WITH PART NO. PER ND1002019

QTY REQD	PART OR IDENTIFYING NO.	MATERIAL OR NOTES	NOMENCLATURE OR DESCRIPTION	FIND NO.

LIST OF MATERIALS

2003972	
NEXT ASSY	USED ON
APPLICATION	

UNLESS OTHERWISE SPECIFIED
DIMENSIONS ARE IN INCHES
CAPACITOR VALUES ARE IN μf
RESISTOR VALUES ARE IN OHMS
TOLERANCES ON

FRACTIONS	DECIMALS	ANGLES
± —	±.03	± —

DO NOT SCALE THIS DRAWING

MATERIAL

SEE NOTE 2

MIT INSTRUMENTATION LAB
CAMBRIDGE, MASS.

DRAWN	Gary L Fuller	10 OCT 66
CHECKED	R Murray	11 OCT 66
APPROVED		
APPROVED	Ellen C Hall	28 Oct 66
APPROVED CCB		
APPROVED MSC		

DATE

MANNED SPACECRAFT CENTER
HOUSTON, TEXAS

FLAT CABLE
FIXED MEMORY MODULE

CODE IDENT NO.	SIZE	DRAWING NO.
80230	C	2004684
SCALE NONE		SHEET 1 OF 1

2004684 A

REVISIONS 2F035					
SYM	ZONE	DESCRIPTION	DR	CHK	DATE	APPROVED

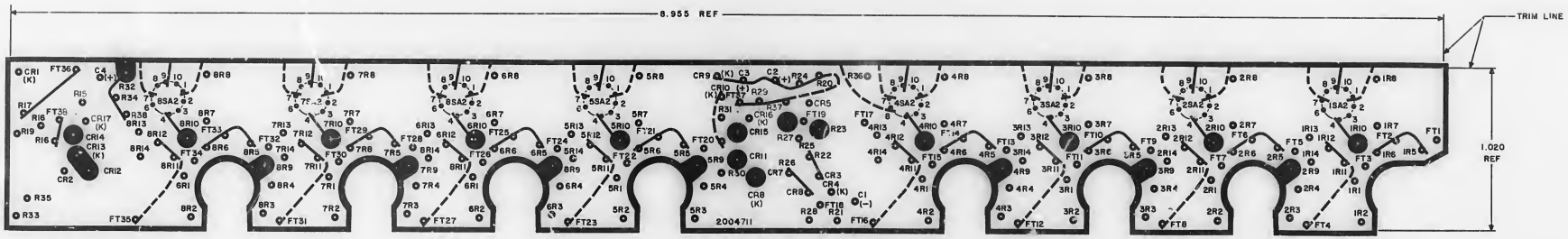

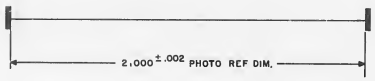

NOTES:

1. INTERPRET DRAWING IN ACCORDANCE WITH STANDARDS PRESCRIBED BY MIL-D-70327
2. MATERIAL: FILM .006/.008 THICK SENSITIZED DIMENSIONALLY STABLE PER L-F-340 TYPE IB, CLASS 2, STYLE IA
3. ORIGINAL OF THIS DRAWING OR REPRODUCTION MADE BY A PROCESS OR METHOD SHALL ENSURE DIMENSIONAL STABILITY
4. MAKE MASTER PATTERN POSITIVE FILMS TO DIMENSIONS SHOWN
5. CUT TO WITHIN .010 OF TRIMLINE
6. BROKEN LINE DENOTES SLEEVING
7. ⊙ .040/.050 DIA HOLE
8. ⊙ .035/.045 DIA HOLE (ISA2 THRU 8SA2 ONLY)
9. ⊙ .120/.130 DIA HOLE (14 PLACES)

QTY REQD	PART OR IDENTIFYING NO.	NOMENCLATURE OR DESCRIPTION	FIND NO.
		LIST OF MATERIALS	

2003962	
2003981	
NEXT ASSY	USED ON
APPLICATION	

UNLESS OTHERWISE SPECIFIED DIMENSIONS ARE IN INCHES
CAPACITOR VALUES ARE IN μf
RESISTOR VALUES ARE IN OHMS
TOLERANCES ON
FRACTIONS ± — DECIMALS ± — ANGLES ± —
DO NOT SCALE THIS DRAWING

MATERIAL
SEE NOTE 2

MIT INSTRUMENTATION LAB
CAMBRIDGE, MASS

MANNED SPACECRAFT CENTER
HOUSTON, TEXAS

DRAWN N. Schmunt 3-20-66
CHECKED R. Schmunt 3-20-66
APPROVED
APPROVED Dick Cobb 3-20-66
APPROVED MIT W. Hoffman 3-20-66
APPROVED MSC 3-21-66

INSULATOR B PHOTOGRAPHIC MASTER
SENSE AMPLIFIER MODULE

CODE IDENT NO.	SIZE	DRAWING NO.
80230	E	2004711

SCALE 4/1 | SHEET 1 OF 1

2004711

REVISIONS TDRR 35062

SYM	ZONE	DESCRIPTION	DR	CHK	DATE	APPROVED
A		REVISED PER TDRR 35331	RFO	[illegible]	1/5/68	[illegible]

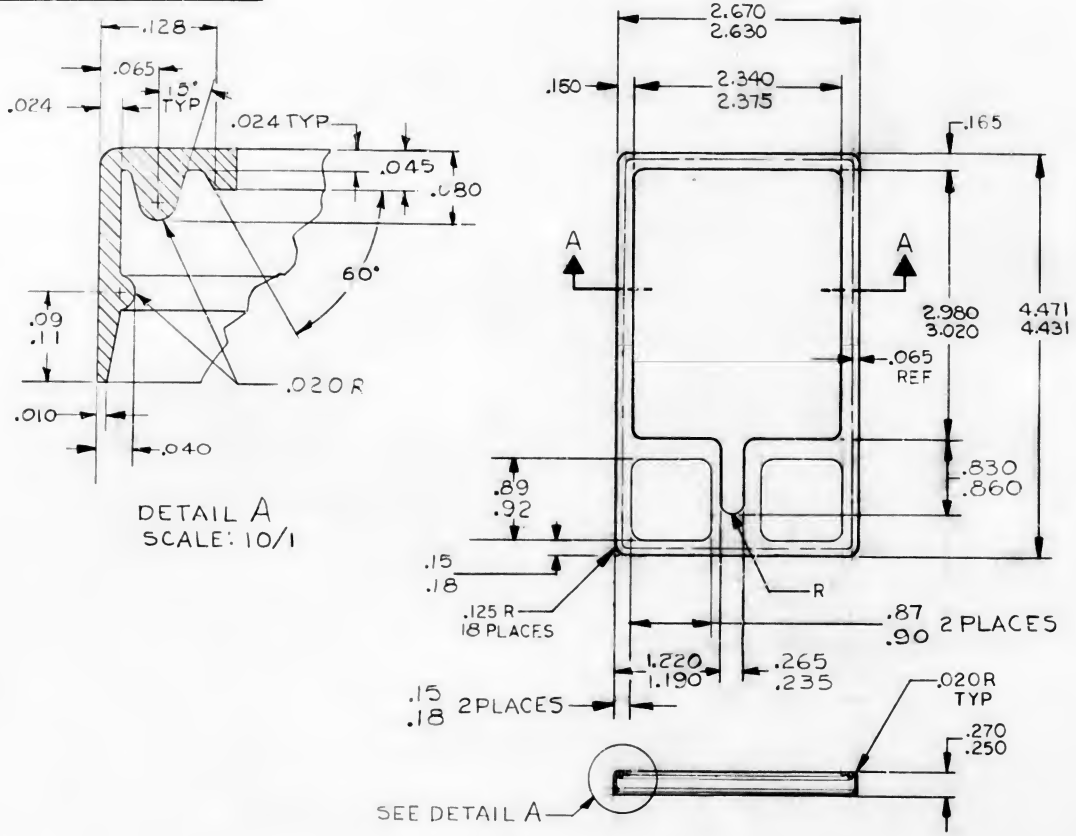

SECTION A-A

NOTES

1. MATL: RUBBER, MOLDED SILICONE (GE-5211) PER MIL-R-5847, CLASS III, 20-25 DUROMETER
2. INTERPRET DRAWING IN ACCORDANCE WITH STANDARDS PRESCRIBED BY MIL-D-70327
3. IDENTIFY WITH PART NO. PER ND1002019, EXCEPT DO NOT MARK GASKET.

QTY REQD	PART OR IDENTIFYING NO.	MATERIAL OR NOTES	NOMENCLATURE OR DESCRIPTION	FIND NO.

LIST OF MATERIALS

NEXT ASSY	USED ON
2003897	

APPLICATION

UNLESS OTHERWISE SPECIFIED
DIMENSIONS ARE IN INCHES
CAPACITOR VALUES ARE IN μf
RESISTOR VALUES ARE IN OHMS
TOLERANCES ON
FRACTIONS ± — DECIMALS ±.005 ANGLES ± 5°
DO NOT SCALE THIS DRAWING

MATERIAL

SEE NOTE 1

MIT INSTRUMENTATION LAB
CAMBRIDGE, MASS.

MANNED SPACECRAFT CENTER
HOUSTON, TEXAS

DRAWN R. J. Gomes 6 NOV 67
CHECKED [illegible] 3 NOV 67
APPROVED [illegible] 7 Nov 67
APPROVED [illegible] 8 Nov 67
CONTRACT NAS9-497
APPROVED [illegible] 1/4/68
APPROVED [illegible] 1/4/68
MSC

DATE

GASKET, INDICATOR COVER

CODE IDENT NO. 80230 | SIZE C | DRAWING NO. 2004741

SCALE 1/1 | SHEET 1 OF 1

2004741 A

REVISIONS TOLA 3732/						
SYM	ZONE	DESCRIPTION	DR	CHK	DATE	APPROVED

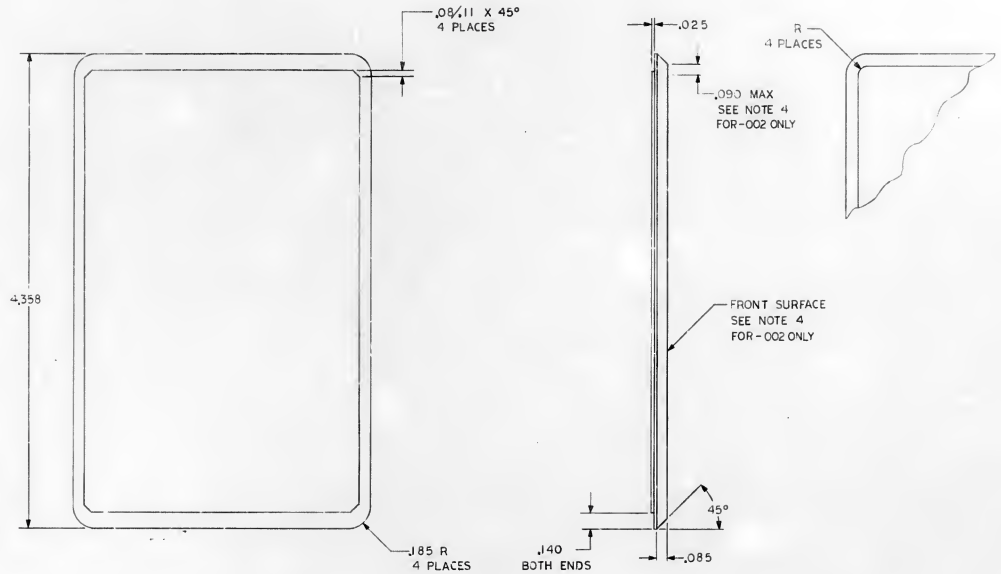

-002	1 THRU 6
-001	1,2,3&6
NOTE APPLICATION	

NOTES:

1. MATL: LAMINATED GLASS PER MIL-G-8602A, CLASS II, GRADE 2N.
2. INTERPRET DWG IN ACCORDANCE WITH STANDARDS PRESCRIBED BY MIL-D-70327.
3. IDENTIFY WITH PART NO. PER ND1002019
4. ANTI-REFLECTION COATING PER MIL-C-675A, EXCEPT THE REQUIREMENTS OF PARA: 3.7 AND 4.6.9; MAY BE APPLIED TO THE FRONT SURFACE. THE COATING SHALL BE WITHIN .09 IN. OF THE EXTREMITIES OF THE FRONT SURFACE. THE UNCOATED AREA SHALL NOT EXCEED A TOTAL OF 0.7 SQ. IN.
5. BORDER SURFACES SHALL BE FREE OF COATING PER NOTE 4
6. GRIND SHARP EDGES .004/.008.

QTY REQD	PART OR IDENTIFYING NO.	MATERIAL OR NOTES	NOMENCLATURE OR DESCRIPTION	FIND NO.

LIST OF MATERIALS

2003988	
NEXT ASSY	USED ON
APPLICATION	

UNLESS OTHERWISE SPECIFIED DIMENSIONS ARE IN INCHES
CAPACITOR VALUES ARE IN μf
RESISTOR VALUES ARE IN OHMS
TOLERANCES ON
FRACTIONS ± DECIMALS ± .005 ANGLES ± 2°
DO NOT SCALE THIS DRAWING

MATERIAL

MIT INSTRUMENTATION LAB
CAMBRIDGE MASS

MANNED SPACECRAFT CENTER
HOUSTON, TEXAS

DRAWN		5 JAN 69
CHECKED		5 JAN 69
APPROVED		25 Jan 69
APPROVED		25 Jan 69
APPROVED MIT		25 Jan 69
APPROVED MSC		DATE

PANEL, INDICATOR (E/L)
AGC DSKY

CODE IDENT NO	SIZE	DRAWING NO.
80230	D	2004745
SCALE 2/1		SHEET 1 OF 1

2004745

REVISIONS 26197			
SYM	DESCRIPTION	DATE	APPROVAL

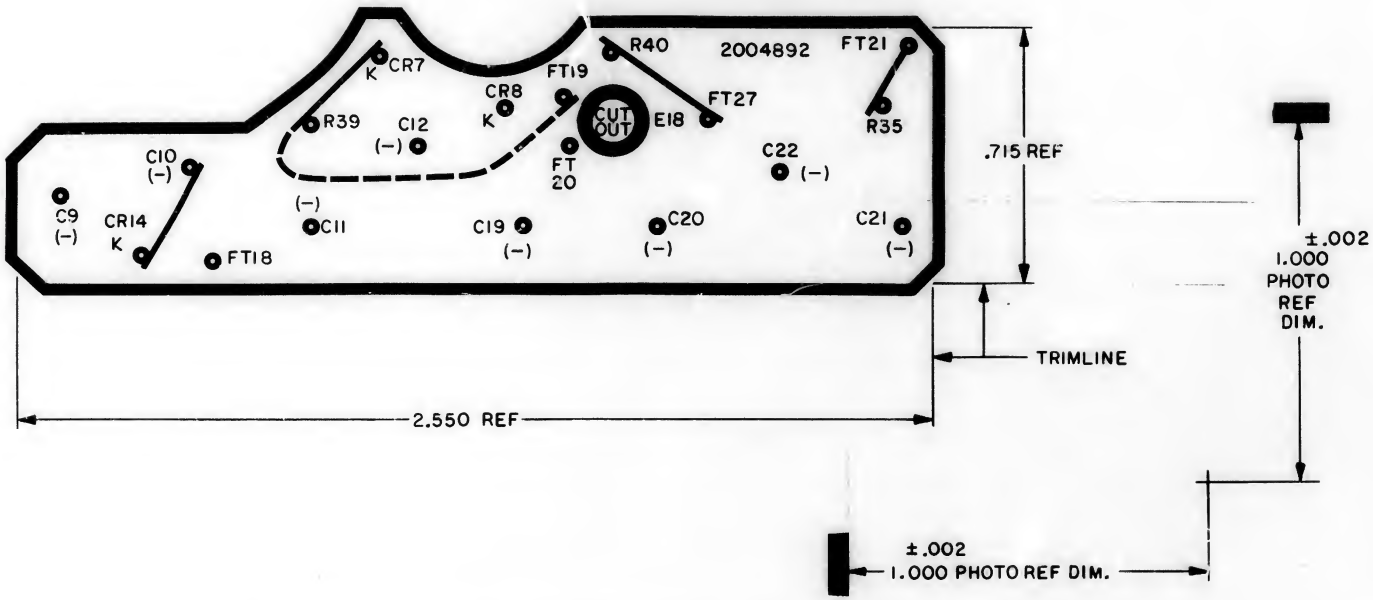

NOTES

1. INTERPRET DRAWING IN ACCORDANCE WITH STANDARDS PRESCRIBED BY MIL-D-70327
2. ORIGINAL OF THIS DRAWING OR REPRODUCTION MADE BY A PROCESS OR METHOD SHALL INSURE DIMENSIONAL STABILITY
3. CUT TO WITHIN .010 OF TRIMLINE
4. MAKE MASTER PATTERN POSITIVE FILM TO DIMENSIONS SHOWN
5. BROKEN LINE DENOTES SLEEVING
6. MATERIAL: FILM .006/.008 THK SENSITIZED DIMENSIONALLY STABLE PER L-F-340, TYPE IB, CLASS 2, STYLE IA
7. ● .040/.050 DIA HOLE
8. ○ .20/.22 DIA HOLE

QTY REQD	PART OR IDENTIFYING NO.	NOMENCLATURE OR DESCRIPTION	FIND NO.

LIST OF MATERIALS

2003953	
NEXT ASSY	USED ON
APPLICATION	

UNLESS OTHERWISE SPECIFIED DIMENSIONS ARE IN INCHES
TOLERANCES ON
FRACTIONS ± DECIMALS ± ANGLES ±
DO NOT SCALE THIS DRAWING
MATERIAL SEE NOTE 6
HEAT TREATMENT
FINAL FINISH

MIT INSTRUMENTATION LAB
CAMBRIDGE, MASS

DRAWN E. Whiting DATE 7 FEB 66
CHECKED R. Edwards 7 Feb 66
APPROVAL J. W. McCarty 8 Feb 66
APPROVAL Ellen C. Hall 8 Feb 66
NASA APPROVAL A. C. METZGER
MIT APPROVAL

MANNED SPACECRAFT CENTER
HOUSTON, TEXAS

INSULATOR D PHOTOGRAPHIC MASTER POWER SUPPLY

CODE IDENT NO.	SIZE	NASA DRAWING NO.
80230	C	2004892
SCALE 4/1	WT	SHEET 1 OF 1

2004892

REVISIONS 2697			
SYM	DESCRIPTION	DATE	APPROVAL

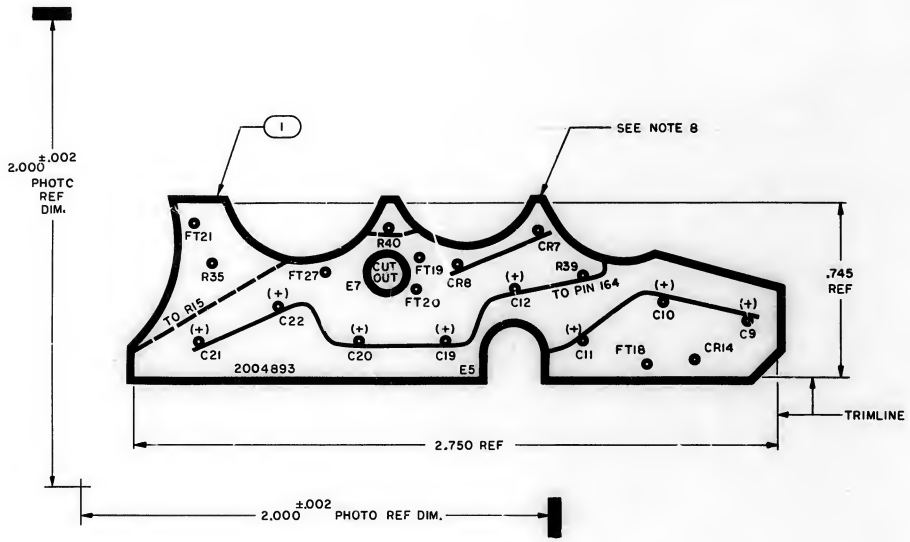

NOTES

1. INTERPRET DRAWING IN ACCORDANCE WITH STANDARDS PRESCRIBED BY MIL-D-70327
2. ORIGINAL OF THIS DRAWING OR REPRODUCTION MADE BY A PROCESS OR METHOD SHALL INSURE DIMENSIONAL STABILITY
3. CUT TO WITHIN .010 OF TRIMLINE
4. MAKE MASTER PATTERN POSITIVE FILM TO DIMENSIONS SHOWN
5. MATERIAL: FILM .006/.008 THK SENSITIZED DIMENSIONALLY STABLE PER L-F-340, TYPE IB, CLASS 2, STYLE IA
6. ⊙ .040/.050 DIA HOLE
7. BROKEN LINE DENOTES SLEEVING
8. APPLY FIND NO. 2 TO FAR SIDE OF FIND NO. 1
9. ◯ .20/.22 DIA HOLE
10. AR DENOTES AS REQUIRED

QTY REQD	PART OR IDENTIFYING NO.	NOMENCLATURE OR DESCRIPTION	FIND NO.
AR	1006318	ADHESIVE	2
1	2004893-001	INSULATOR A	1

LIST OF MATERIALS

2003953	
NEXT ASSY	USED ON
APPLICATION	

UNLESS OTHERWISE SPECIFIED DIMENSIONS ARE IN INCHES
TOLERANCES ON
FRACTIONS ± DECIMALS ± ANGLES ±
DO NOT SCALE THIS DRAWING
MATERIAL SEE NOTE 5
HEAT TREATMENT
FINAL FINISH

MIT INSTRUMENTATION LAB CAMBRIDGE, MASS

MANNED SPACECRAFT CENTER HOUSTON, TEXAS

DRAWN E. Wiening DATE 4 FEB 66
CHECKED
APPROVAL
APPROVAL
NASA APPROVAL A. S. METZGER
MIT APPROVAL

INSULATOR A PHOTOGRAPHIC MASTER POWER SUPPLY

CODE IDENT NO.	SIZE	NASA DRAWING NO.
80230	D	2004893
SCALE 4/1	WT	SHEET 1 OF 1

REVISIONS TDRR 26197

SYM	ZONE	DESCRIPTION	DR	CHK	DATE	APPROVED
A		REVISED PER TDRR 27553	EPJ	CM	4/4/66	

REF DES	FIND NO.
CR11 CR12 CR13	1

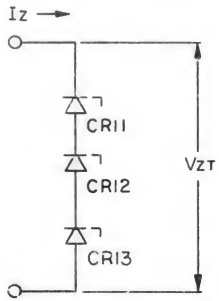

NOTE

1. CR11, CR12 & CR13 SHALL BE SELECTED SUCH THAT WHEN THEY ARE CONNECTED IN SERIES AS SHOWN VZT SHALL BE 25.95 ± 0.20 VDC WITH Iz = 5.0 ±0.2 MA
2. IDENTIFY PER ND 1002019

QTY REQD	PART OR IDENTIFYING NO.	MATERIAL OR NOTES	NOMENCLATURE OR DESCRIPTION	FIND NO.
~~1~~	~~2004112-002~~		~~DIODE~~	~~2~~
3	2004112-001		DIODE	1

LIST OF MATERIALS

NEXT ASSY	USED ON
2003953	

APPLICATION

UNLESS OTHERWISE SPECIFIED
DIMENSIONS ARE IN INCHES
CAPACITOR VALUES ARE IN μf
RESISTOR VALUES ARE IN OHMS
TOLERANCES ON
FRACTIONS ± DECIMALS ± ANGLES ±
DO NOT SCALE THIS DRAWING

MATERIAL

MIT INSTRUMENTATION LAB
CAMBRIDGE, MASS.

DRAWN E. Uffing 7FEB66
CHECKED R. Edwards 7 Feb 66
APPROVED J. M. Kirby 8 Feb 66
APPROVED Eldon C. Hall 8 Feb 66
APPROVED MIT W. Hackell 8 Feb 66
APPROVED MSC
DATE

MANNED SPACECRAFT CENTER
HOUSTON, TEXAS

DIODE SELECTION LIST
POWER SUPPLY

CODE IDENT NO.	SIZE	DRAWING NO.
80230	C	2004897

SCALE NONE SHEET 1 OF 1

REVISIONS 26200

SYM	ZONE	DESCRIPTION	DR	CHK	DATE	APPROVED
A		CHANGE PER TDRR 32351			12 JAN 67	14 JAN 67

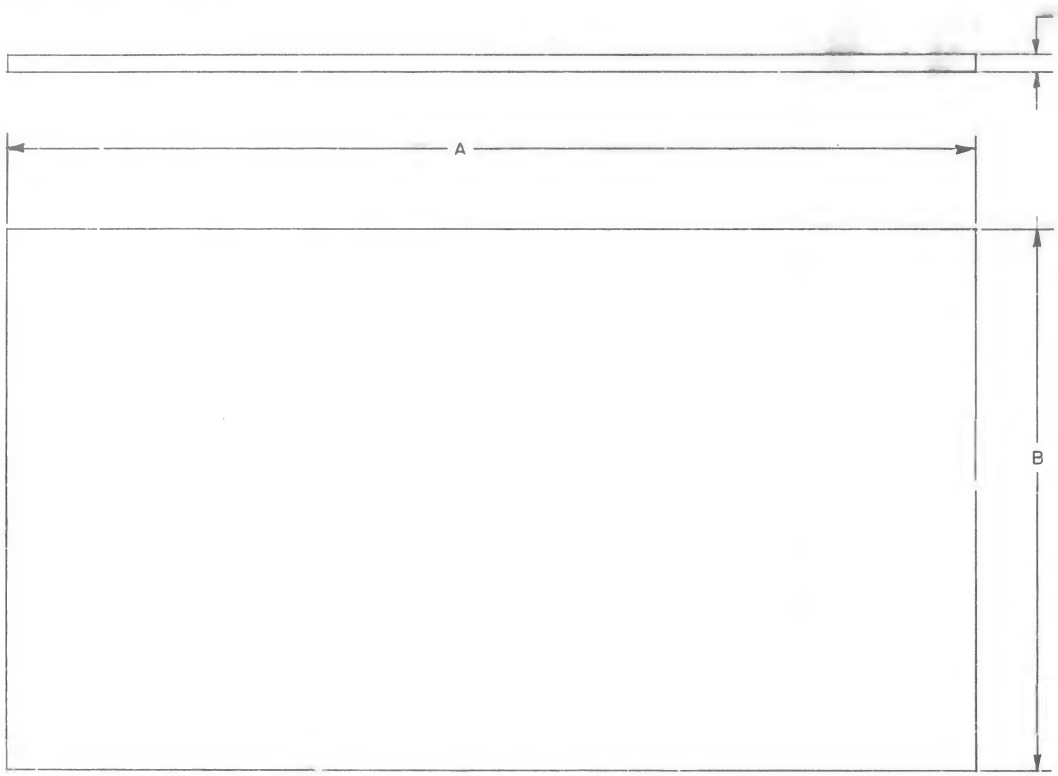

DASH NO.	MATL MAKE FROM	DIM. A ±.01	DIM. B ±.01	DIM. C REF
001	1006370-004	10.75	6.00	.193
002	1006370-005	4.55	1.27	.127
003	1006370-006	10.50	3.94	.085
004	1006370-006	9.00	3.94	.085
005	1006370-006	10.50	2.40	.085

NOTES

1. INTERPRET DRAWING IN ACCORDANCE WITH STANDARDS PRESCRIBED BY MIL-D-70327
2. MATL: SEE CHART

QTY REQD	PART OR IDENTIFYING NO.	MATERIAL OR NOTES	NOMENCLATURE OR DESCRIPTION	FIND NO.

LIST OF MATERIALS

NEXT ASSY	USED ON
2003977	
2003976	
2003200	
2003970	

APPLICATION

UNLESS OTHERWISE SPECIFIED
DIMENSIONS ARE IN INCHES
CAPACITOR VALUES ARE IN μf
RESISTOR VALUES ARE IN OHMS
TOLERANCES ON
FRACTIONS ± DECIMALS ±.005 ANGLES ±
DO NOT SCALE THIS DRAWING

MATERIAL

MIT INSTRUMENTATION LAB
CAMBRIDGE, MASS.

MANNED SPACECRAFT CENTER
HOUSTON, TEXAS

DRAWN		9 FEB 66
CHECKED		9 Feb 66
APPROVED		10 Feb 66
APPROVED		11 Feb 66
APPROVED MIT	A. C. METZGER	11 Feb 66
APPROVED MSC		DATE

PAD, VIBRATION
AGC

CODE IDENT NO.	SIZE	DRAWING NO.
80230	C	2004899

SCALE 1/1 SHEET OF

2004899 A

REVISIONS 20256			
SYM	DESCRIPTION	DATE	APPROVAL

2004901 —

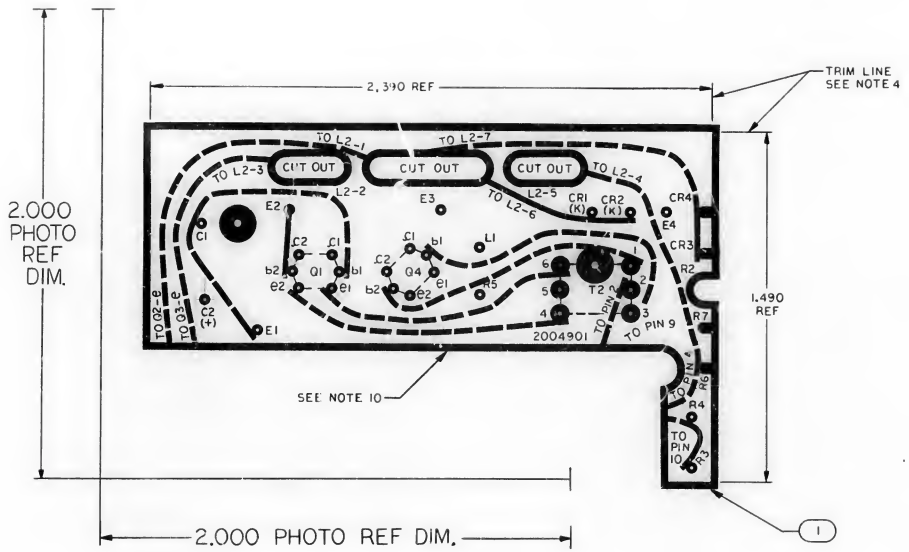

NOTES

MATL: FILM, .006/.008 THK SENSITIZED DIMENSIONALLY STABLE PER L-F-340, TYPE IB, CLASS 2, STYLE IA
2. ORIGINAL OF THIS DRAWING OR REPRODUCTION MADE BY A PROCESS OR METHOD SHALL INSURE DIMENSIONAL STABILITY
3. MAKE MASTER PATTERN POSITIVE FILMS TO DIMENSIONS SHOWN
4. CUT TO WITHIN .010 OF TRIMLINE
5. BROKEN LINE DENOTES SLEEVING
6. ● .040/.050 DIA HOLE
7. ● .180/.190 DIA HOLE
8. ● .050/.100 DIA HOLE
9. IDENTIFY WITH DRAWING NO. & REVISION PER ND1002019
10. APPLY FIND NO.2 TO FARSIDE OF FIND NO.1
11. AR DENOTES AS REQUIRED
12. INTERPRET DRAWING IN ACCORDANCE WITH STANDARDS PRESCRIBED BY MIL-D-70327

QTY REQD	PART OR IDENTIFYING NO	NOMENCLATURE OR DESCRIPTION	FIND NO
AR	1006318	ADHESIVE	2
1	2004901-001	INSULATOR	1
011	LIST OF MATERIALS		

2003901	
NEXT ASSY	USED ON
APPLICATION	

UNLESS OTHERWISE SPECIFIED DIMENSIONS ARE IN INCHES
TOLERANCES ON FRACTIONS DECIMALS ANGLES
DO NOT SCALE THIS DRAWING
MATERIAL SEE NOTE 1
HEAT TREATMENT
FINAL FINISH

MIT INSTRUMENTATION LAB Cambridge Mass
DWG NO CONTRACT
DRAWN DATE 28 Mar 65
CHECKED 10 Jun 65
APPROVAL 10 Jun 65
APPROVAL 12 Aug 65
NASA APPROVAL 7-13-65
MIT APPROVAL 7-15-65

MANNED SPACECRAFT CENTER
HOUSTON TEXAS

INSULATOR, PHOTO MASTER
LOWER LEVEL
POWER SUPPLY MODULE, AGC DSKY

CODE IDENT NO	SIZE	NASA DRAWING NO
80230	D	2004901

SCALE 4/1 WT SHEET 1 OF 1

2004901

REVISIONS 22737

SYM	ZONE	DESCRIPTION	DR	CHK	DATE	APPROVED

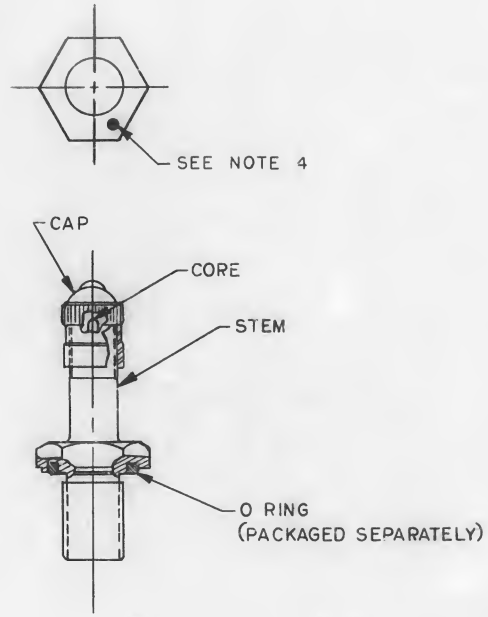

NOTES

1. MAKE FROM SCD 1006345
2. REMOVE VALVE CORE, CLEAN VALVE SEAT AND CORE USING ACETONE, FED SPEC O-A-51 AND DRY COMPRESSED AIR
3. TORQUE FOR VALVE CORE SHALL BE 14.0 TO 16.0 INCH OUNCES
4. TEST PER:
   A. MIL-STD-202, METHOD 112, TEST CONDITION "C", PROCEDURE IIIa, USING HELIUM. THE DIFFERERENTIAL PRESSURE SHALL BE 20 PSIA AND TEMPERATURE SHALL BE 70° F ± 20° F. THE LEAK RATE SHALL NOT EXCEED 1×10^{-5} STD. CC/SEC.
   B. THE ABOVE TEST SHALL BE PERFORMED WITH THE CAP REMOVED
5. AFTER VALVE QUALIFICATION PER NOTE 4 MARK WITH DOT APPROXIMATELY WHERE SHOWN, USING MARKING INK (RED) 1006271-7

QTY REQD	PART OR IDENTIFYING NO.	MATERIAL OR NOTES	NOMENCLATURE OR DESCRIPTION	FIND NO.

LIST OF MATERIALS

NEXT ASSY	USED ON
2003954	
2003904	

APPLICATION

UNLESS OTHERWISE SPECIFIED
DIMENSIONS ARE IN INCHES
CAPACITOR VALUES ARE IN μf
RESISTOR VALUES ARE IN OHMS
TOLERANCES ON
FRACTIONS ± DECIMALS ± ANGLES ±
DO NOT SCALE THIS DRAWING
MATERIAL

MIT INSTRUMENTATION LAB
CAMBRIDGE, MASS.

MANNED SPACECRAFT CENTER
HOUSTON, TEXAS

DRAWN	J. A. Goffini	10 SEP 65
CHECKED	[illegible]	21 Sep 65
APPROVED	[illegible]	21 Sep 65
APPROVED	Ellen C. Hall	21 Sep 65
APPROVED MIT	[illegible]	25 Oct 65
APPROVED MSC		DATE

NOT REQUIRED PER LETTER NASA PP7-65-612

VALVE, PNEUMATIC TANK
(LEAK TESTED)
AGC DSKY

CODE IDENT NO.	SIZE	DRAWING NO.
80230	C	2004903

SCALE NONE

SHEET 1 OF 1

MODERN BLUE PRINT CO. D-19550

MASTER

HOLE IDENT	X1 BASIC DIM.	Y1 BASIC DIM.	⌖ DIA	HOLE DIA	QTY
A1	.000	.455	.010	.101 .107	26
A2	.000	.890			
A3	.000	1.325			
A4	.160	1.325			
A5	.200	.020			
A6	.240	.155			
A7	.240	.790			
A8	.240	1.020			
A9	.300	1.300			
A10	.410	.300			
A11	.570	1.415			
A12	.625	.320			
A13	.700	1.100			
A14	.700	1.270			
A15	.700	1.430			
A16	.790	.100			
A17	.790	.250			
A18	.840	.660			
A19	.910	.000			
A20	.910	.170			
A21	.960	.590			
A22	.960	.750			
A23	1.070	.625			
A24	1.228	.490			
A25	1.228	.925			
A26	1.295	1.355			
B1	.720	.550	.010	.086 .090	22
B2	↓	.600			
B3	↓	.710			
B4	.720	.820			
B5	.840	.420			
B6	↓	.530			
B7		.910			
B8		1.020			
B9		1.130			
B10		1.240			
B11		1.350			
B12	↓	1.460			
B13	.840	1.570			
B14	.960	.855			
B15	.960	.965			

HOLE IDENT	X1 BASIC DIM.	Y1 BASIC DIM.	⌖ DIA	HOLE DIA	QTY
B16	.960	1.185	.010	.086 .090	
B17	↓	1.295			
B18	↓	1.405			
B19	.960	1.515			
B20	1.020	.080			
B21	1.020	.260			
B22	1.070	1.350			
C1	.000	.000	.010	.154 .160	6
C2	.000	1.480			
C3	.240	.355			
C4	.240	.540			
C5	.400	1.145			
C6	.610	1.570			
D1	.050	.250	.010	SEE DETAIL A & B	13
D2	.050	.685			
D3	.050	1.120			
D4	.250	1.520			
D5	.460	.080			
D6	.490	.570			
D7	.490	.895			
D8	1.175	.695			
D9	1.175	1.130			
D10	1.228	.275			
D11	↓	−.030			
D12	↓	−.335			
D13	1.228	−.640			
E1	.120	.440	.010	.060 .067	23
E2	.120	.890			
E3	.240	1.200			
E4	.300	−.030			
E5	.300	.680			
E6	.300	.920			
E7	.440	1.570			
E8	.520	.265			
E9	.520	.380			

HOLE IDENT	X1 BASIC DIM.	Y1 BASIC DIM.	⌖ DIA	HOLE DIA	QTY
E10	.623	.330	.010	.060 .067	
E11	.625	.750			
E12	.660	.070			
E13	.660	.990			
E14	.720	−.020			
E15	.720	.380			
E16	.840	.800			
E17	.960	.380			
E18	.960	.670			
E19	.960	1.075			
E20	1.020	−.030			
E21	1.060	.540			
E22	1.060	.920			
E23	1.175	1.330			
F1	.500	1.360	.010	240/250	1

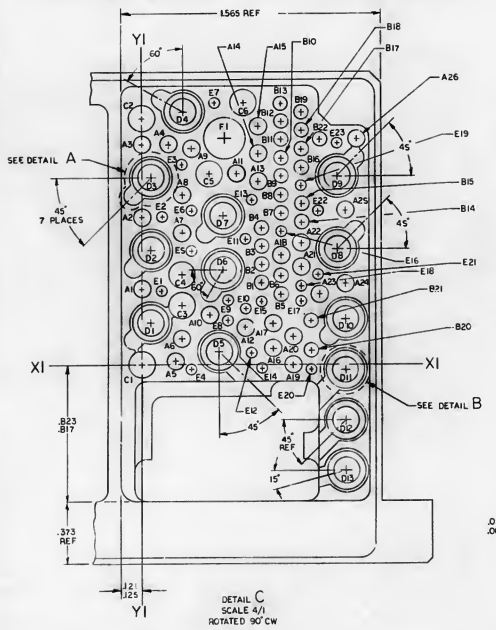

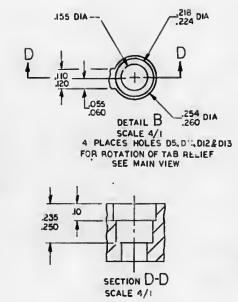

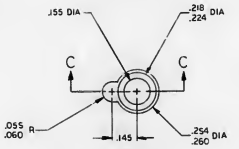

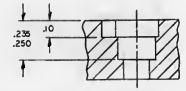

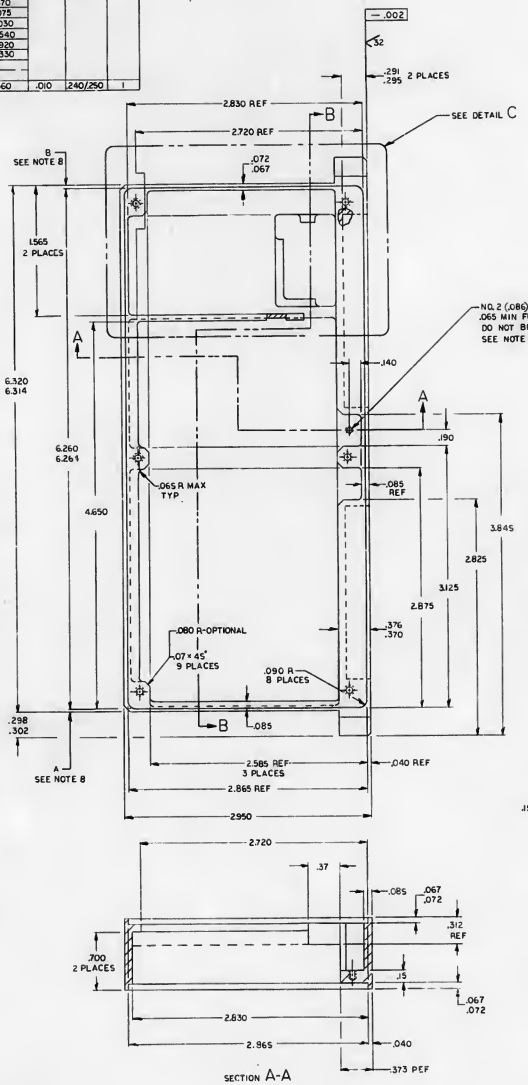

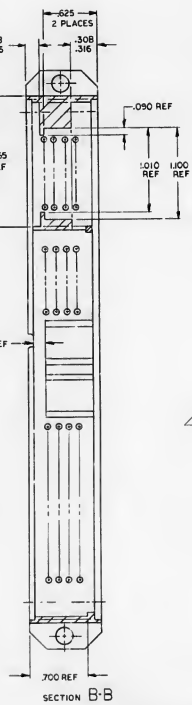

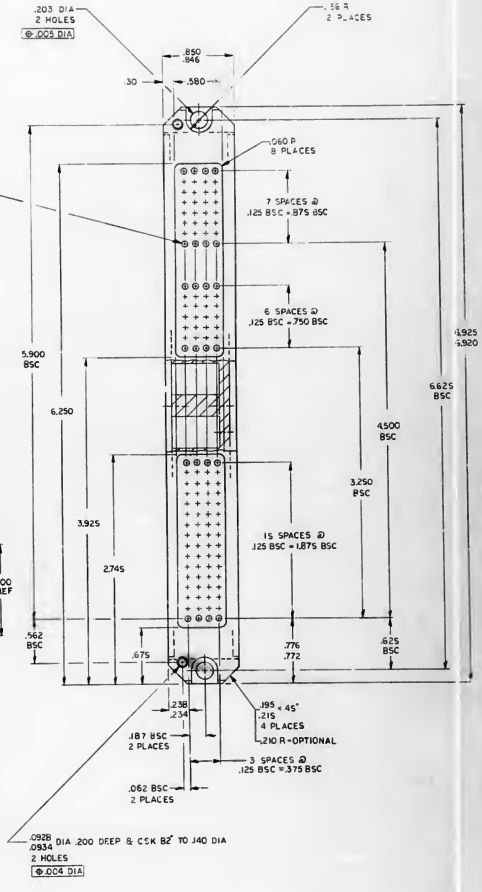

NOTES
1. MATL: MAG ZK60A-T5 PER QQ-M-31, TEMP T5
2. ANODIZE PER MIL-M-45202, TYPE II, CLASS D
3. INSTALL FIND NO. 2 PER MS33646
4. ALL SURFACES 125/ UNLESS OTHERWISE SPECIFIED
5. UNLESS OTHERWISE SPECIFIED ALL FILLETS & RADII TO BE .010 MAX
6. COAT THREADS OF FIND NO. 2 WITH MIL-P-8585, COLOR Y
7. REMOVE BURRS & SHARP EDGES .010/.020 UNLESS OTHERWISE SPECIFIED
8. DIMENSIONS A & B TO BE EQUAL WITHIN .005
9. INTERPRET DRAWING IN ACCORDANCE WITH STANDARDS PRESCRIBED BY MIL-D-70327
10. TAPPED HOLE TO BE FREE OF ANODIZING
11. IDENTIFY WITH DRAWING NO. & REVISION PER ND1002019

2004910 -

REVISIONS			
SYM	DESCRIPTION	DATE	APPROVAL

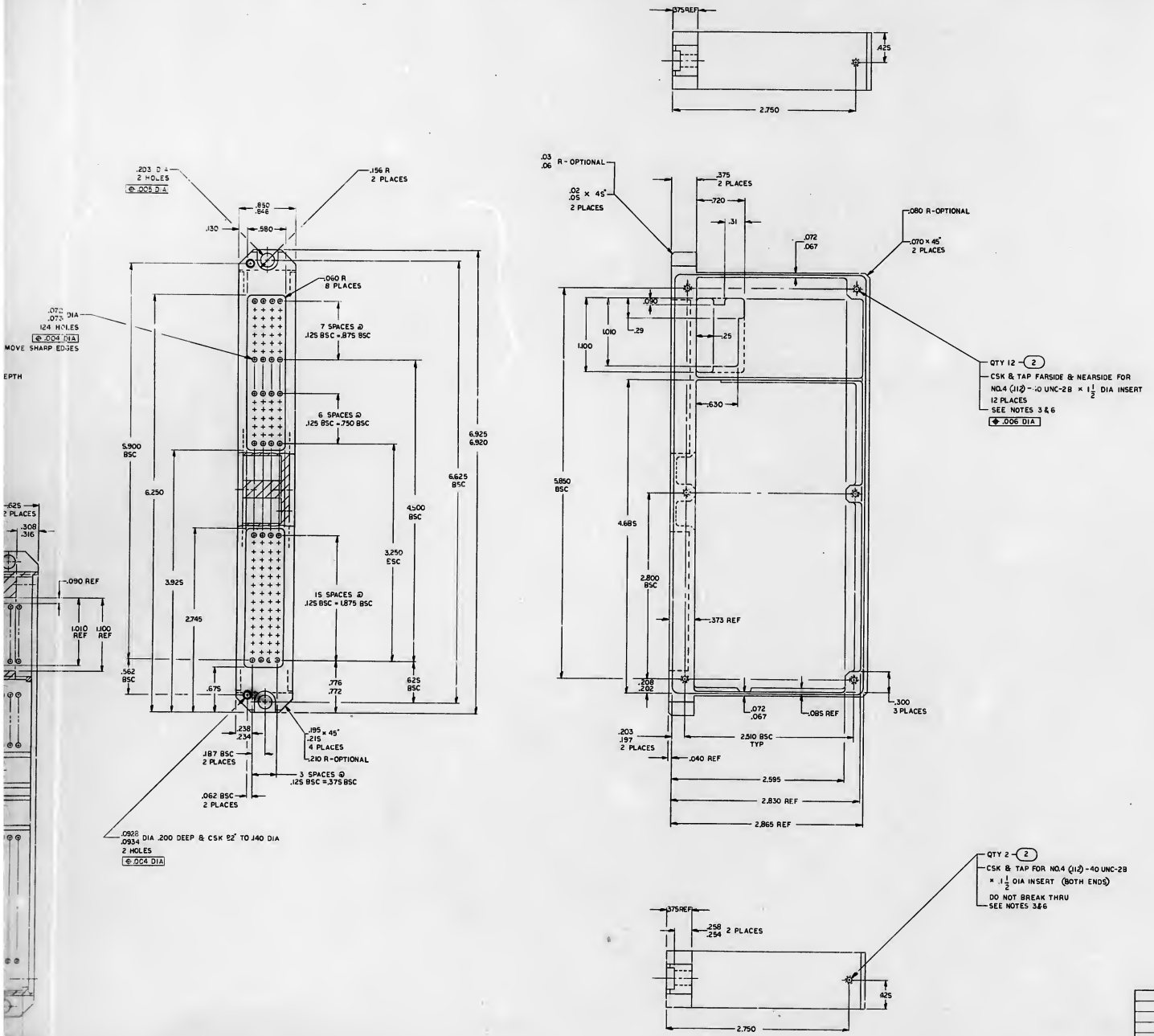

QTY REQD	PART OR IDENTIFYING NO	NOMENCLATURE OR DESCRIPTION	FIND NO
14	MS21209-C0415	INSERT, THREADED, SELF LOCKING	2
1	2004910-001	HEADER, HOUSING	1

011 — LIST OF MATERIALS

2003907		
NEXT ASSY	USED ON	
APPLICATION		

UNLESS OTHERWISE SPECIFIED DIMENSIONS ARE IN INCHES
TOLERANCES ON
FRACTIONS ± DECIMALS ±.005 ±.001 ANGLES ± 1/2
DO NOT SCALE THIS DRAWING
MATERIAL: SEE NOTE 1
HEAT TREATMENT
FINAL FINISH

MIT INSTRUMENTATION LAB
Cambridge, Massachusetts

DRAWN C. Gaynor DATE 6/25/68
CHECKED
APPROVAL
APPROVAL
NASA APPROVAL
MIT APPROVAL

MANNED SPACECRAFT CENTER
HOUSTON, TEXAS

HEADER, HOUSING
INDICATOR DRIVER MODULE
AGC DSKY

CODE IDENT NO	SIZE	NASA DRAWING NO
80230	J	2004910
SCALE 2/1	WT	SHEET 1 OF 1

2004910

–	2004912	REVISIONS 20272	
SYM	DESCRIPTION	DATE	APPROVAL

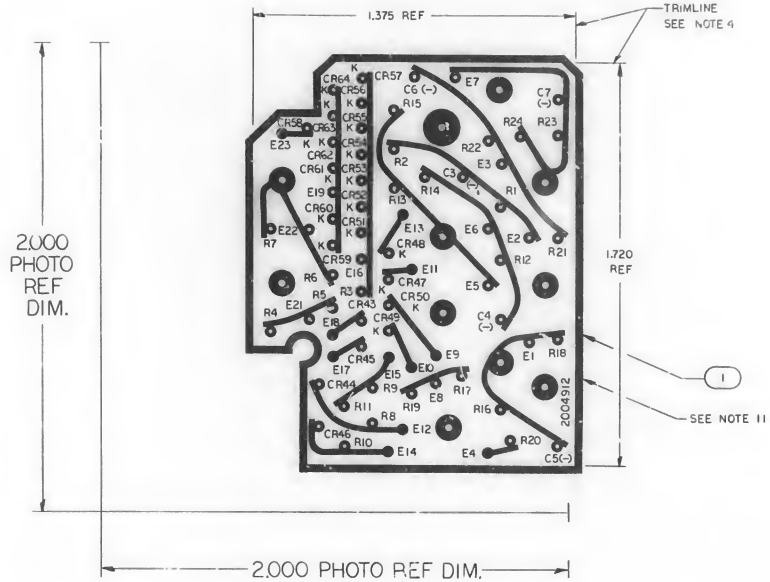

NOTES

1. MATL: FILM, .006/.008 THK SENSITIZED DIMENSIONALLY STABLE PER L-F-340, TYPE IB, CLASS 2, STYLE IA
2. ORIGINAL OF THIS DRAWING OR REPRODUCTION MADE BY A PROCESS OR METHOD SHALL INSURE DIMENSIONAL STABILITY
3. MAKE MASTER PATTERN POSITIVE FILMS TO DIMENSIONS SHOWN
4. CUT TO WITHIN .010 OF TRIMLINE
5. BROKEN LINE DENOTES SLEEVING
6. ● .040/.050 DIA HOLE
7. ● .120/.130 DIA HOLE
8. ● .180/.190 DIA HOLE
9. INTERPRET DRAWING IN ACCORDANCE WITH STANDARDS PRESCRIBED BY MIL-D-70327
10. IDENTIFY WITH DRAWING NO. & REVISION PER ND1002019
11. APPLY FIND NO. 2 TO FARSIDE OF FIND NO. 1
12. AR DENOTES AS REQUIRED

QTY REQD	PART OR IDENTIFYING NO	NOMENCLATURE OR DESCRIPTION	FIND NO
AR	1006318	ADHESIVE	2
1	2004912-001	INSULATOR	1
011		LIST OF MATERIALS	

2003902	
NEXT ASSY	USED ON
APPLICATION	

UNLESS OTHERWISE SPECIFIED DIMENSIONS ARE IN INCHES
TOLERANCES ON
FRACTIONS ± DECIMALS ± ANGLES ±
DO NOT SCALE THIS DRAWING
MATERIAL SEE NOTE 1
HEAT TREATMENT
FINAL FINISH

MIT INSTRUMENTATION LAB CAMBRIDGE MASS
DWG NO CONTRACT

DRAWN W. Barron DATE 6/30/65
CHECKED R. Edwards 6/30/65
APPROVAL [illegible] 1 June 65
APPROVAL [illegible] 21 Jun 65
NASA APPROVAL [illegible] 6/21/65
M.I.T. APPROVAL [illegible] 22 Jun 65

MANNED SPACECRAFT CENTER
HOUSTON, TEXAS

INSULATOR, PHOTO MASTER REAR
DECODING CIRCUIT, INDICATOR DRIVER

CODE IDENT NO 80230 | SIZE D | NASA DRAWING NO 2004912
SCALE 4/1 | WT | SHEET 1 OF 1

2004912

REVISIONS			
SYM	DESCRIPTION	DATE	APPROVAL

2004914 -

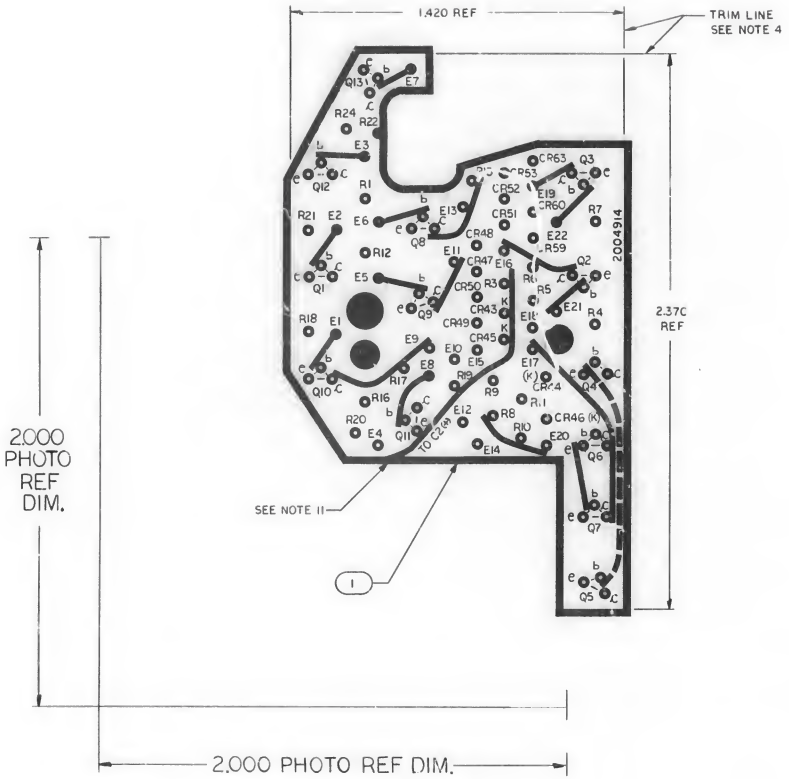

NOTES

1. MATL: FILM, .006/.008 THK SENSITIZED DIMENSIONALLY STABLE PER L-F-340, TYPE IB, CLASS 2, STYLE IA
2. ORIGINAL OF THIS DRAWING OR REPRODUCTION MADE BY A PROCESS OR METHOD SHALL INSURE DIMENSIONAL STABILITY
3. MAKE MASTER PATTERN POSITIVE FILMS TO DIMENSIONS SHOWN
4. CUT TO WITHIN .010 OF TRIM LINE
5. BROKEN LINE DENOTES SLEEVING
6. ⊙ .040/.050 DIA HOLE
7. INTERPRET DRAWING IN ACCORDANCE WITH STANDARDS PRESCRIBED BY MIL-D-70327
8. IDENTIFY WITH DRAWING NO. & REVISION PER ND1002019
9. ● .180/.190 DIA HOLE
10. ● .140/.150 DIA HOLE
11. APPLY FIND NO.2 TO FARSIDE OF FIND NO.1
12. AR DENOTES AS REQUIRED

QTY REQD	PART OR IDENTIFYING NO	NOMENCLATURE OR DESCRIPTION	FIND NO
AR	1006318	ADHESIVE	2
1	2004914-001	INSULATOR	1

011 LIST OF MATERIALS

2003902 NEXT ASSY	USED ON	APPLICATION	

UNLESS OTHERWISE SPECIFIED DIMENSIONS ARE IN INCHES
TOLERANCES ON
FRACTIONS DECIMALS ANGLES
DO NOT SCALE THIS DRAWING
MATERIAL SEE NOTE 1
HEAT TREATMENT
FINAL FINISH

MIT INSTRUMENTATION LAB CAMBRIDGE MASS
DWG. NO CONTRACT
DRAWN DATE
CHECKED
APPROVAL
APPROVAL
NASA APPROVAL
MIT APPROVAL

MANNED SPACECRAFT CENTER HOUSTON, TEXAS

INSULATOR, PHOTO MASTER
LOWER LEVEL
DECODING CIRCUIT, INDICATOR DRIVER

CODE IDENT NO	SIZE	NASA DRAWING NO
80230	D	2004914
SCALE 4/1	WT	SHEET 1 OF 1

2004914

REVISIONS					
SYM	ZONE	DESCRIPTION	DR	CHK	DATE	APPROVED

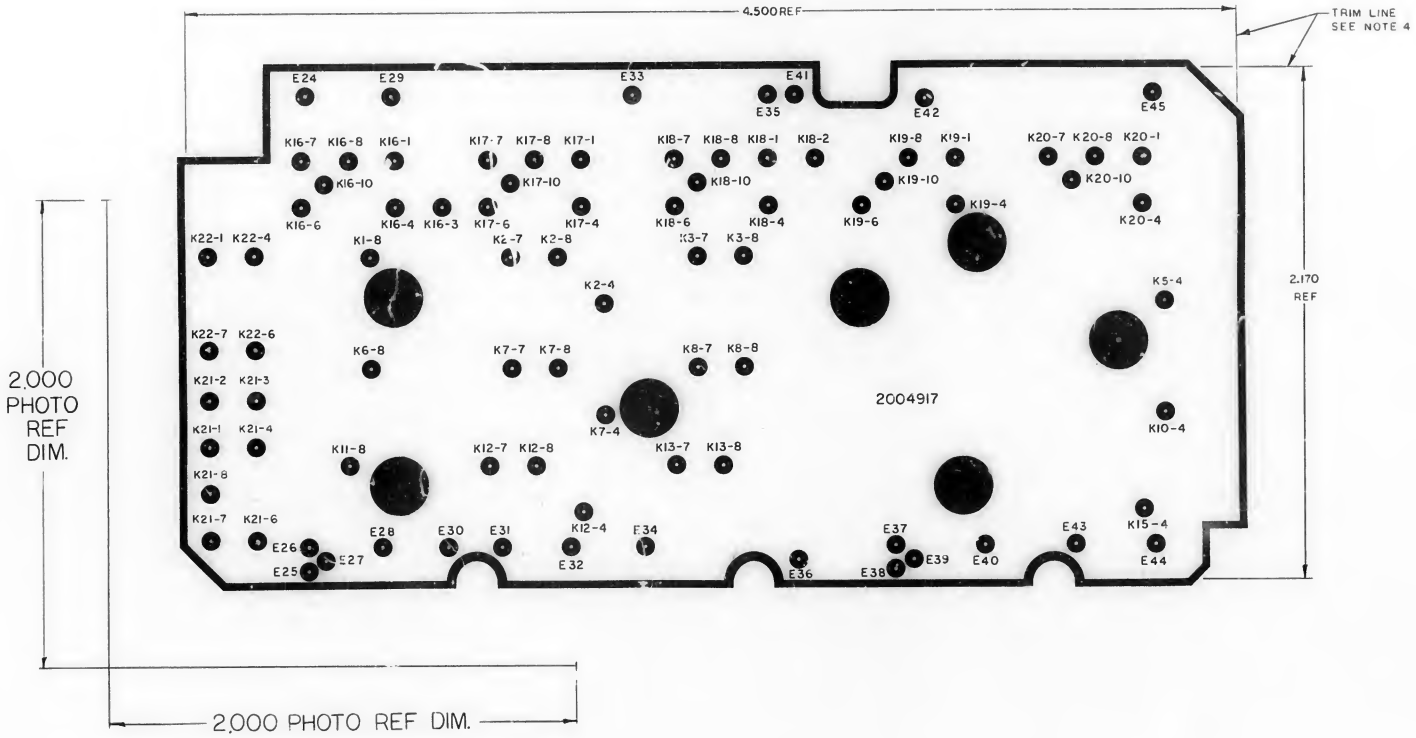

NOTES

1. MATERIAL: FILM .006/.008 THK SENSITIZED DIMENSIONALLY STABLE PER L-F-340, TYPE IB, CLASS 2, STYLE IA
2. ORIGINAL OF THIS DRAWING OR REPRODUCTION MADE BY A PROCESS OR METHOD SHALL INSURE DIMENSIONAL STABILITY
3. MAKE MASTER PATTERN POSITIVE FILMS TO DIMENSIONS SHOWN
4. CUT WITHIN .010 OF TRIM LINE
5. IDENTIFY WITH DRAWING NO. AND REVISION PER ND1002019
6. INTERPRET DRAWING IN ACCORDANCE WITH STANDARDS PRESCRIBED BY MIL-D-70327
7. ● .080/.084 DIA HOLE
8. ● .240/.260 DIA HOLE

NEXT ASSY	USED ON
2003910	
APPLICATION	

UNLESS OTHERWISE SPECIFIED DIMENSIONS ARE IN INCHES
CAPACITOR VALUES ARE IN μf
RESISTOR VALUES ARE IN OHMS
TOLERANCES ON
FRACTIONS ± DECIMALS ± ANGLES ±
DO NOT SCALE THIS DRAWING

MATERIAL: SEE NOTE 1

QTY REQD	PART OR IDENTIFYING NO.	MATERIAL OR NOTES	NOMENCLATURE OR DESCRIPTION	FIND NO.

LIST OF MATERIALS

MIT INSTRUMENTATION LAB CAMBRIDGE, MASS.

DRAWN R. Gunter 4/4/61
CHECKED 4/4/61
APPROVED 4/4/61
APPROVED 4/4/61
APPROVED MIT 27 Apr 61
APPROVED MSC 4/4/61
DATE

MANNED SPACECRAFT CENTER HOUSTON, TEXAS

INSULATOR, PHOTOMASTER
SPECIAL LEVEL
RELAY CIRCUIT, INDICATOR DRIVER

CODE IDENT NO. 80230 | SIZE D | DRAWING NO. 2004917
SCALE 4/1 | SHEET 1 OF 1

2004917

2004918 B

REVISIONS			
SYM	DESCRIPTION	DATE	APPROVAL
A	REVISED PER TDRR 21821 OR 6.32 CHK		
B	REVISED PER TDRR 22544 OR 5.23 CHK		

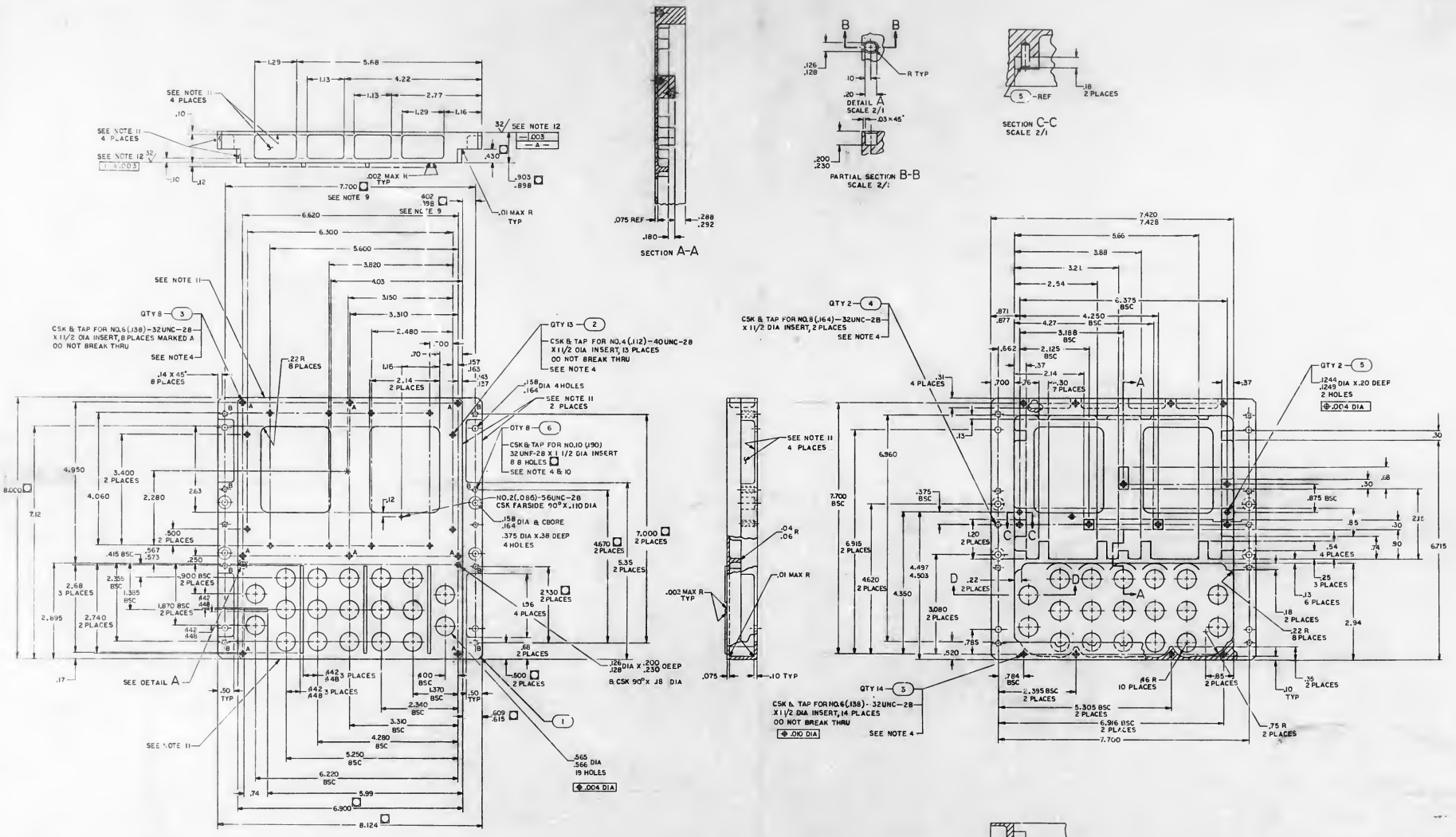

NOTES

1. MATL: 6061-T6-AL PER QQ-A-250/11, TEMP 6
2. REMOVE BURRS & SHARP EDGES .005/.015
3. RADII TO BE .09 R UNLESS OTHERWISE SPECIFIED
4. INSTALL FIND NO. 2,3,4&6 PER MS33646
5. ALL SURFACES 125/ UNLESS OTHERWISE SPECIFIED
6. CHROMATE PER MIL-C-5541, TYPE II, GRADE C, CLASS 3
7. IDENTIFY WITH PART NO. PER NDI002019
8. INTERPRET DRAWING IN ACCORDANCE WITH STANDARDS PRESCRIBED BY MIL-D-70327
9. DIMENSION APPLY TO B HOLES ONLY
10. ☐ DIMENSIONS CONTROLLED BY ICD MH01-01305-116
11. PAINT INDICATED SURFACES PER NDI002279 USING MED GRAY PAINT 1008809-1
12. SCRATCHES NOT PERMISSIBLE ON SURFACES WITH 32/ FINISH

QTY REQD	PART OR IDENTIFYING NO	NOMENCLATURE OR DESCRIPTION	FIND NO.
8	MS21209F1-15	INSERT, THREADED, SELF LOCKING	6
2	MS16555-625	PIN, DOWEL	5
2	MS21209-C0815	INSERT, THREADED, SELF LOCKING	4
22	MS21209-C0615	INSERT, THREADED, SELF LOCKING	3
13	MS21209-C0415	INSERT, THREADED, SELF LOCKING	2
1	2004918-001	HOUSING, FRONT	

011 LIST OF MATERIALS

UNLESS OTHERWISE SPECIFIED DIMENSIONS ARE IN INCHES TOLERANCES ON FRACTIONS ± DECIMALS ±.005 ANGLES ±1° DO NOT SCALE THIS DRAWING	MIT INSTRUMENTATION LAB Cambridge Mass.	MANNED SPACECRAFT CENTER HOUSTON, TEXAS	
MATERIAL SEE NOTE 1	DRAWN	HOUSING, FRONT AGC DSKY	
HEAT TREATMENT NONE	CHECKED		
FINISH SEE NOTE 6	APPROVAL		
2003903 NEXT ASSY / USED ON	NASA APPROVAL	CODE IDENT NO 80230	SIZE J
APPLICATION	MIT APPROVAL	SCALE 1/1	NASA DRAWING NO 2004918
	ART APPROVAL	WT	SHEET 1 OF 1

2004918 B

REVISIONS 20855						
SYM	ZONE	DESCRIPTION	DR	CHK	DATE	APPROVED

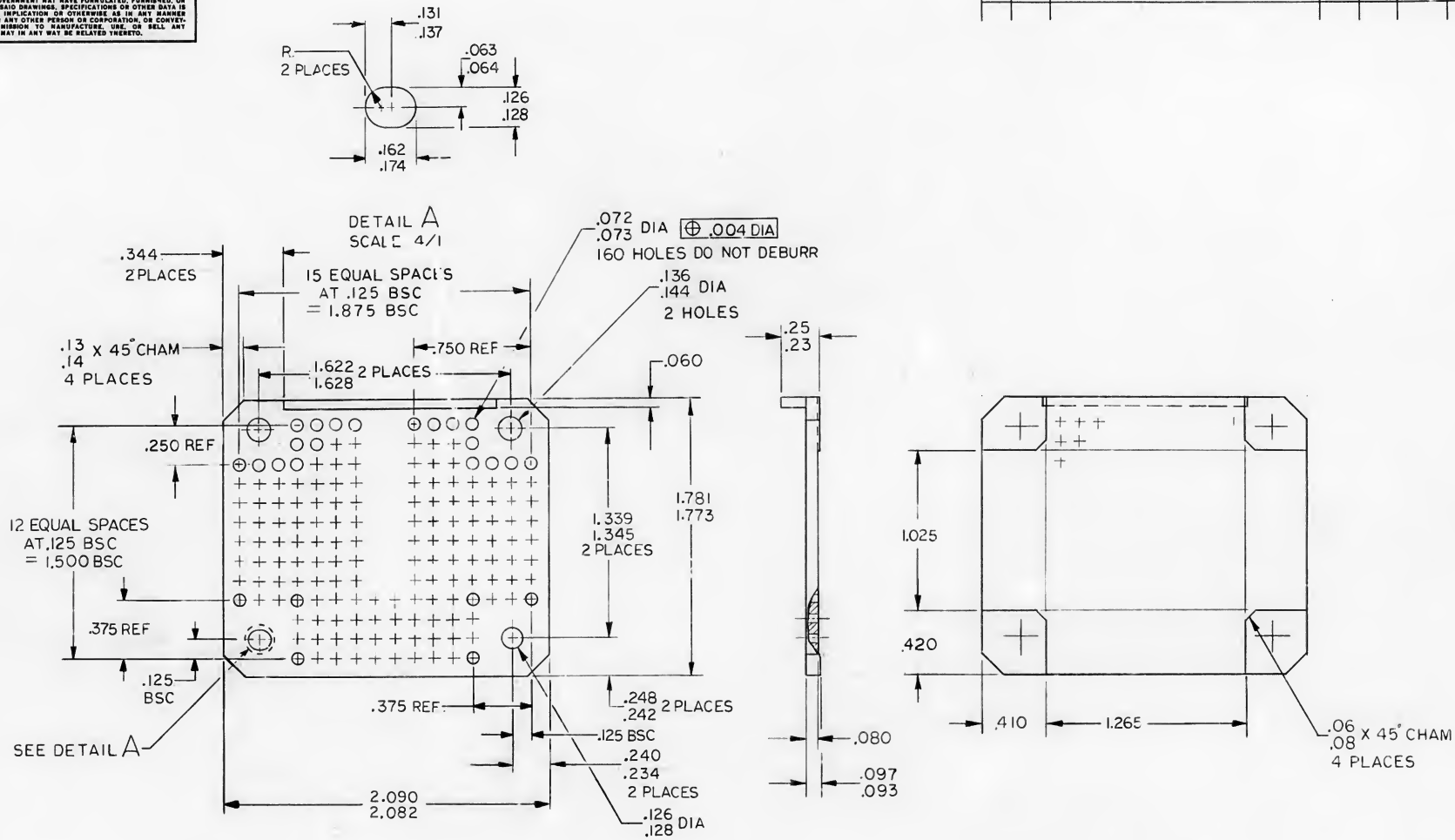

NOTES

1. MATL: 6061-T6 AL PER QQ-A-250/11, TEMPER T6
2. REMOVE BURRS AND SHARP EDGES .01/.02 EXCEPT WHERE SHOWN
3. CHROMATE PER MIL-C-5541, TYPE II, GRADE C, CLASS 3
4. ALL SURFACES 125
5. INTERPRET DRAWING IN ACCORDANCE WITH STANDARDS PRESCRIBED BY MIL-D-70327
6. IDENTIFY WITH DRAWING NO. AND REVISION PER ND1002019

QTY REQD	PART OR IDENTIFYING NO.	MATERIAL OR NOTES	NOMENCLATURE OR DESCRIPTION	FIND NO.

LIST OF MATERIALS

2003913	
NEXT ASSY	USED ON
APPLICATION	

UNLESS OTHERWISE SPECIFIED
DIMENSIONS ARE IN INCHES
CAPACITOR VALUES ARE IN μf
RESISTOR VALUES ARE IN OHMS
TOLERANCES ON
FRACTIONS ± DECIMALS ±.005 ANGLES ± 2°
DO NOT SCALE THIS DRAWING

MATERIAL
SEE NOTE 1

MIT INSTRUMENTATION LAB
CAMBRIDGE, MASS.

MANNED SPACECRAFT CENTER
HOUSTON, TEXAS

DRAWN	J C Zimmerman	29 Jun 65
CHECKED	C DeGreenia	4 JUN 65
APPROVED	[illegible]	2 Jun 65
APPROVED	Ellen C Hall	12 July 65
APPROVED MIT	M G Murky	7-13-65
APPROVED MSC	W J Rhee	7-13-65

DATE

PLATE, CONNECTOR INDICATOR DIGITAL AGC DSKY

CODE IDENT NO.	SIZE	DRAWING NO.
80230	C	2004920

SCALE 2/1 SHEET 1 OF 1

2004920

2004929 A

REVISIONS			
SYM	DESCRIPTION	DATE	APPROVAL
A	REVISED PER TDRR 22313 DR		

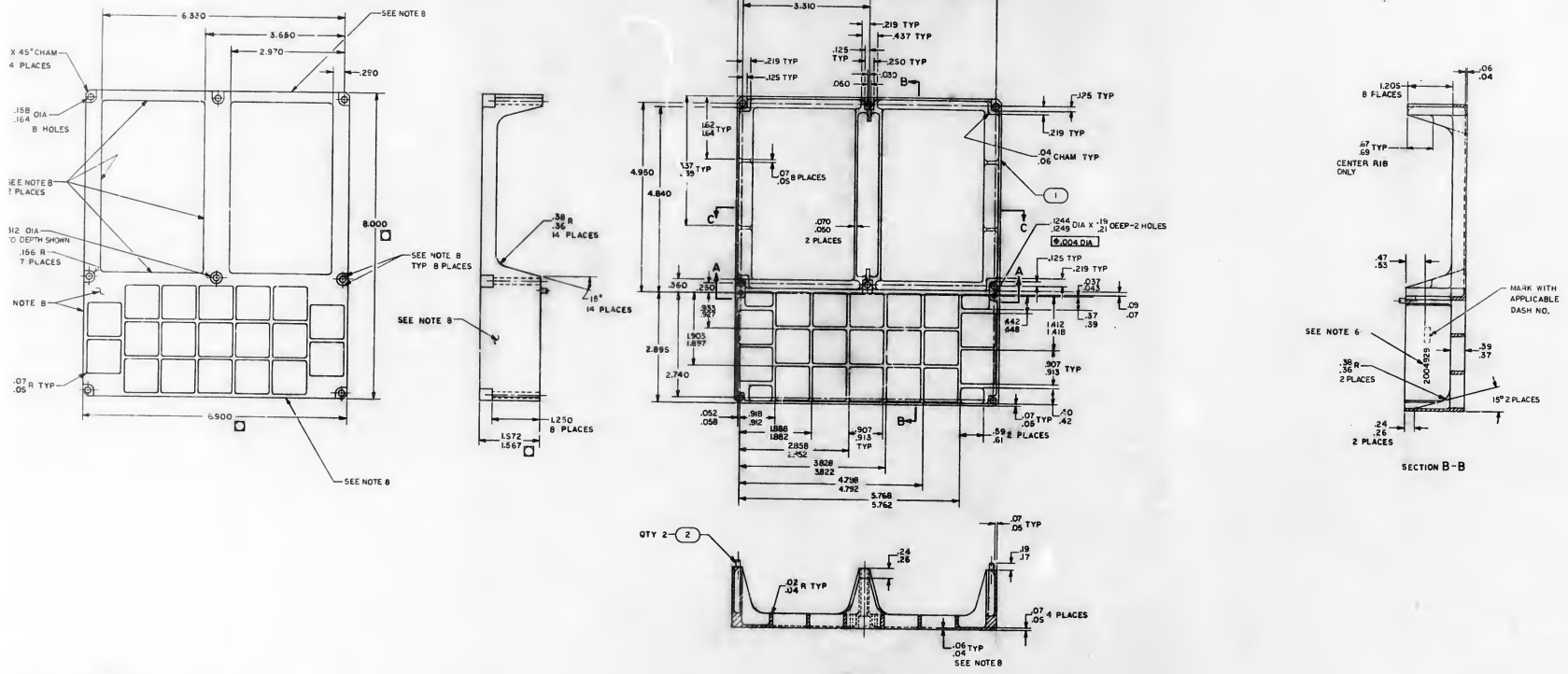

NOTES

1. MATL:6061-T6-AL PER QQ-A-250/11,TEMP6
2. REMOVE BURRS AND SHARP EDGES.005/.015
3. ALL SURFACES 125
4. CHROMATE PER MIL-C-5541,TYPE II,GRADE C,CLASS B
5. UNLESS OTHERWISE SPECIFIED ALL FILLETS AND RADII TO BE .06 R MAX
6. MARKING 4 HIGH BLACK CHARACTERS PER NDI002019 AND NDI002122,TYPE II,CLASS 2 USING INK IC06271-10
7. ⊂ DIMENSIONS CONTROLLED BY ICD MH01
8. PAINT INDICATED SURFACES WITH IDI0729-1 RED GRAY EPOXY ENAMEL PER NDI002110
9. INTERPRET DRAWING IN ACCORDANCE WITH STANDARDS PRESCRIBED BY MIL-D-70327

QTY REQD	PART OR IDENTIFYING NO.	NOMENCLATURE OR DESCRIPTION	FIND NO
2	MS16555-625	PIN, DOWEL	
1	2004929-001	COVER, FRONT	

011 LIST OF MATERIALS

2003900 NEXT ASSY	USED ON	APPLICATION	

UNLESS OTHERWISE SPECIFIED DIMENSIONS ARE IN INCHES
TOLERANCES ON
FRACTIONS ± DECIMALS .005 ANGLES ± 2°
DO NOT SCALE THIS DRAWING
MATERIAL SEE NOTE 1
HEAT TREATMENT NONE
FINAL FINISH SEE NOTES 4 & 8

MIT INSTRUMENTATION LAB CAMBRIDGE MASS
DRAWN
CHECKED
APPROVAL
APPROVAL
NASA APPROVAL
MIT APPROVAL
MIT APPROVAL

MANNED SPACECRAFT CENTER HOUSTON, TEXAS

COVER, FRONT
AGC DSKY

CODE IDENT NO. 80230 | SIZE J | *NASA DRAWING NO. 2004929

SCALE 1/1 | WT | SHEET 1 OF

2004929 B

REVISIONS				
SYM	DESCRIPTION	DATE	APPROVED
A	REVISED PER TDRR 12313 DR		
B	REVISED PER TDRR 22547 DR		

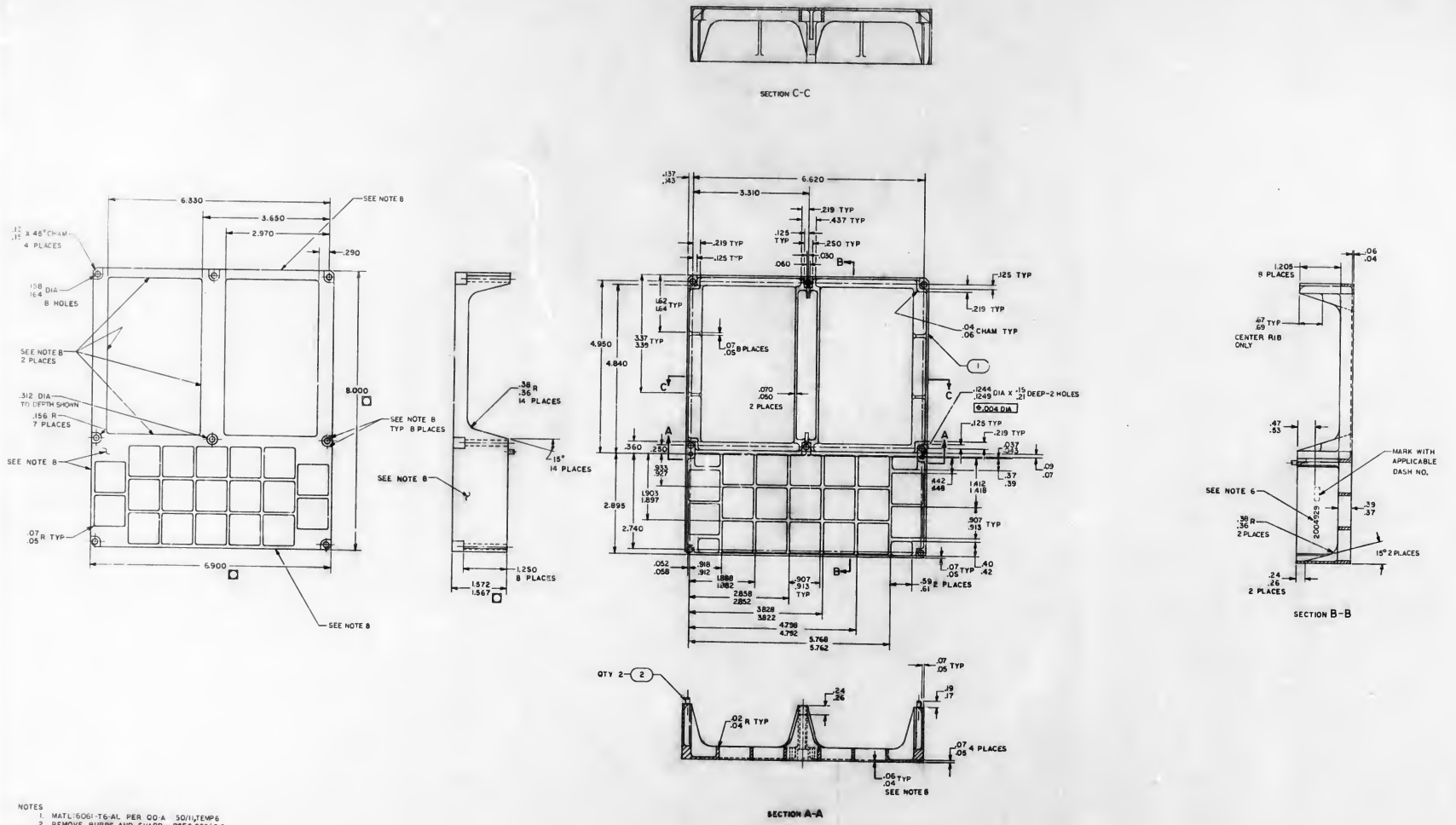

NOTES
1. MATL: 6061-T6-AL PER QQ-A 50/11, TEMP 6
2. REMOVE BURRS AND SHARP EDGES .005/.015
3. ALL SURFACES 125/
4. CHROMATE PER MIL-C-5541, TYPE II, GRADE C, CLASS 8
5. UNLESS OTHERWISE SPECIFIED ALL FILLETS AND RADII TO BE .09 R MAX
6. MARK .25 HIGH BLACK CHARACTERS PER NDI002019 AND NDI002122, TYPE II, CLASS 2 USING INK 1006271-10
7. DIMENSIONS CONTROLLED BY ICD MH01
8. PAINT INDICATED SURFACES WITH 1008809-1 RED GRAY EPOXY ENAMEL PER 1002279
9. INTERPRET DRAWING IN ACCORDANCE WITH STANDARDS PRESCRIBED BY MIL-D-70327

QTY REQD	PART OR IDENTIFYING NO	NOMENCLATURE OR DESCRIPTION	FIND NO
2	MS16555-425	PIN, DOWEL	2
1	2004929-001	COVER, FRONT	1

011 LIST OF MATERIALS

MIT INSTRUMENTATION LAB Cambridge, Mass.

MANNED SPACECRAFT CENTER HOUSTON, TEXAS

COVER, FRONT
AGC DSKY

UNLESS OTHERWISE SPECIFIED DIMENSIONS ARE IN INCHES TOLERANCES ON FRACTIONS ± DECIMALS ±.005 ANGLES ±2°
DO NOT SCALE THIS DRAWING
MATERIAL SEE NOTE 1
HEAT TREATMENT NONE
FINAL FINISH SEE NOTES 4 & 8

NEXT ASSY	USED ON
2003985	
2003900	

APPLICATION

DRAWN
CHECKED
APPROVAL
APPROVAL
NASA APPROVAL
MIT APPROVAL
MIT APPROVAL

CODE IDENT NO. 80230 SIZE J NASA DRAWING NO 2004929
SCALE 1/1 WT SHEET 1 OF

2004929 B

2004929 C

REVISIONS				
SYM	DESCRIPTION	DATE	APPROVAL
A	REVISED PER TDAR 22313 DR CHK APPD		
B	REVISED PEI TDAR 22547 DR CHK APPD		
C	REVISED PER TDAR 22738 DR CHK APPD		

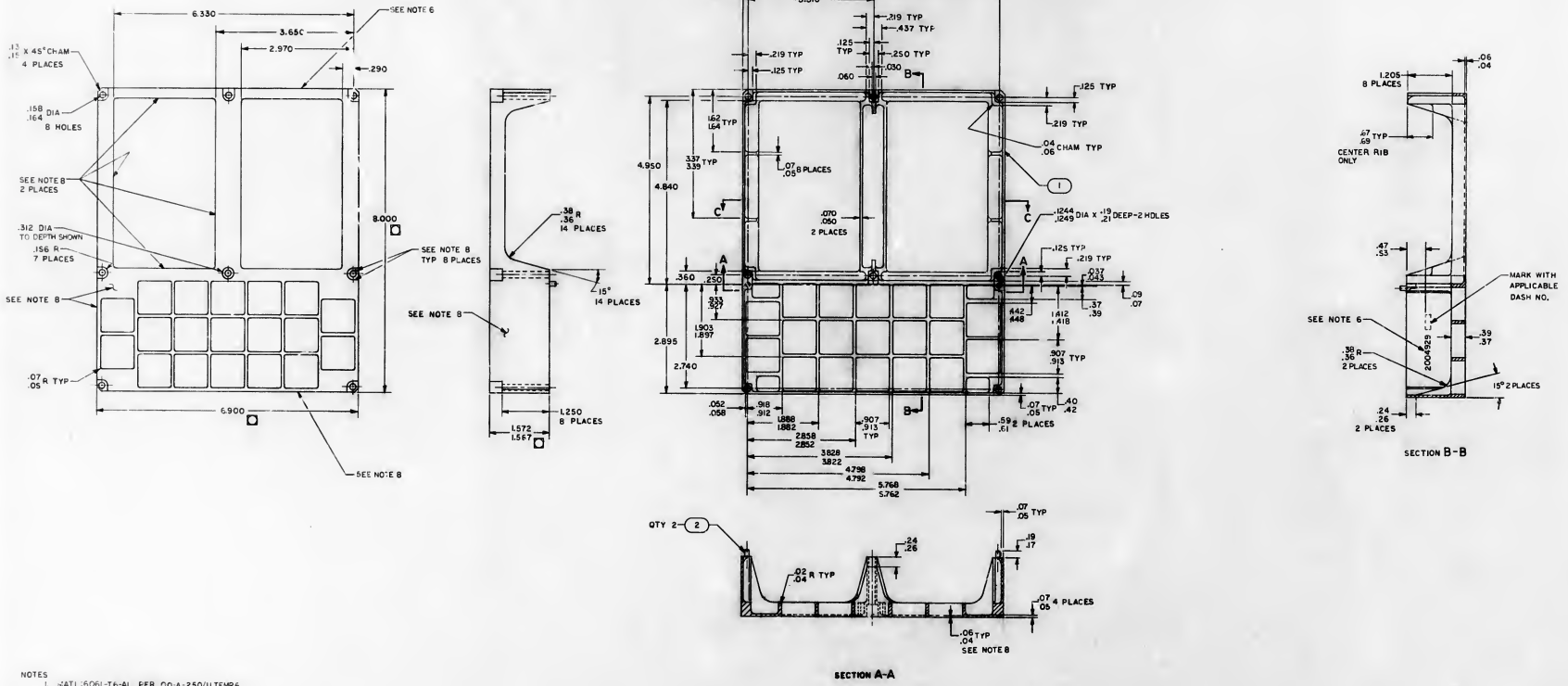

NOTES

1. MATL: 6061-T6-AL PER QQ-A-250/11, TEMP 6
2. REMOVE BURRS AND SHARP EDGES .005/.015
3. ALL SURFACES 125/
4. CHROMATE PER MIL-C-5541, TYPE II, GRADE C, CLASS 3
5. UNLESS OTHERWISE SPECIFIED ALL FILLETS AND RADII TO BE .05 R MAX
6. MARK .125 HIGH BLACK CHARACTERS PER ND1002015 AND ND1002122, TYPE II, CLASS 2 USING INK 1706271-10
7. ⊕ DIMENSIONS CONTROLLED BY NCD MH01-01305-116
8. ⊠ PAINT INDICATES SURFACES WITH 1008809-1 RED GRAY EPOXY ENAMEL PER 1002279
9. INTERPRET DRAWING IN ACCORDANCE WITH STANDARDS PRESCRIBED BY MIL-D-70327

QTY REQD	PART OR IDENTIFYING NO	NOMENCLATURE OR DESCRIPTION	FIND NO
2	MS16555-625	PIN, DOWEL	
1	2004929-001	COVER, FRONT	

011 LIST OF MATERIALS

2003900	
2003900	
NEXT ASSY	USED ON
APPLICATION	

UNLESS OTHERWISE SPECIFIED DIMENSIONS ARE IN INCHES
TOLERANCES ON
FRACTIONS ± DECIMALS ±.005 ANG ±2°
DO NOT SCALE THIS DRAWING
MATERIAL SEE NOTE 1
HEAT TREATMENT NONE
FINAL FINISH SEE NOTES 4 & 8

E I-Y INSTRUMENTATION LAB Engineering Work
DRAWN DATE
CHECKED
APPROVAL
APPROVAL
NASA APPROVAL
MIT APPROVAL
MIT APPROVAL

MANNED SPACECRAFT CENTER
HOUSTON, TEXAS

COVER, FRONT
AGC DSKY

CODE IDENT NO. 80230 | SIZE J | NASA DRAWING NO. 2004929
SCALE 1/1 | WT | SHEET 1 OF 1

MASTER

2004929 C

2004929 D

REVISIONS				
	ZONE		DATE	APPROVED
	A	REVISED PER TDRR 22515 DR CHK APPD		
	B	REVISED PER TDRR 22547 DR CHK APPD		
	C	REVISED PER TDRR 22738 DR CHK APPD		
	D	REVISED PER TDRR 28178 DR CHK APPD		

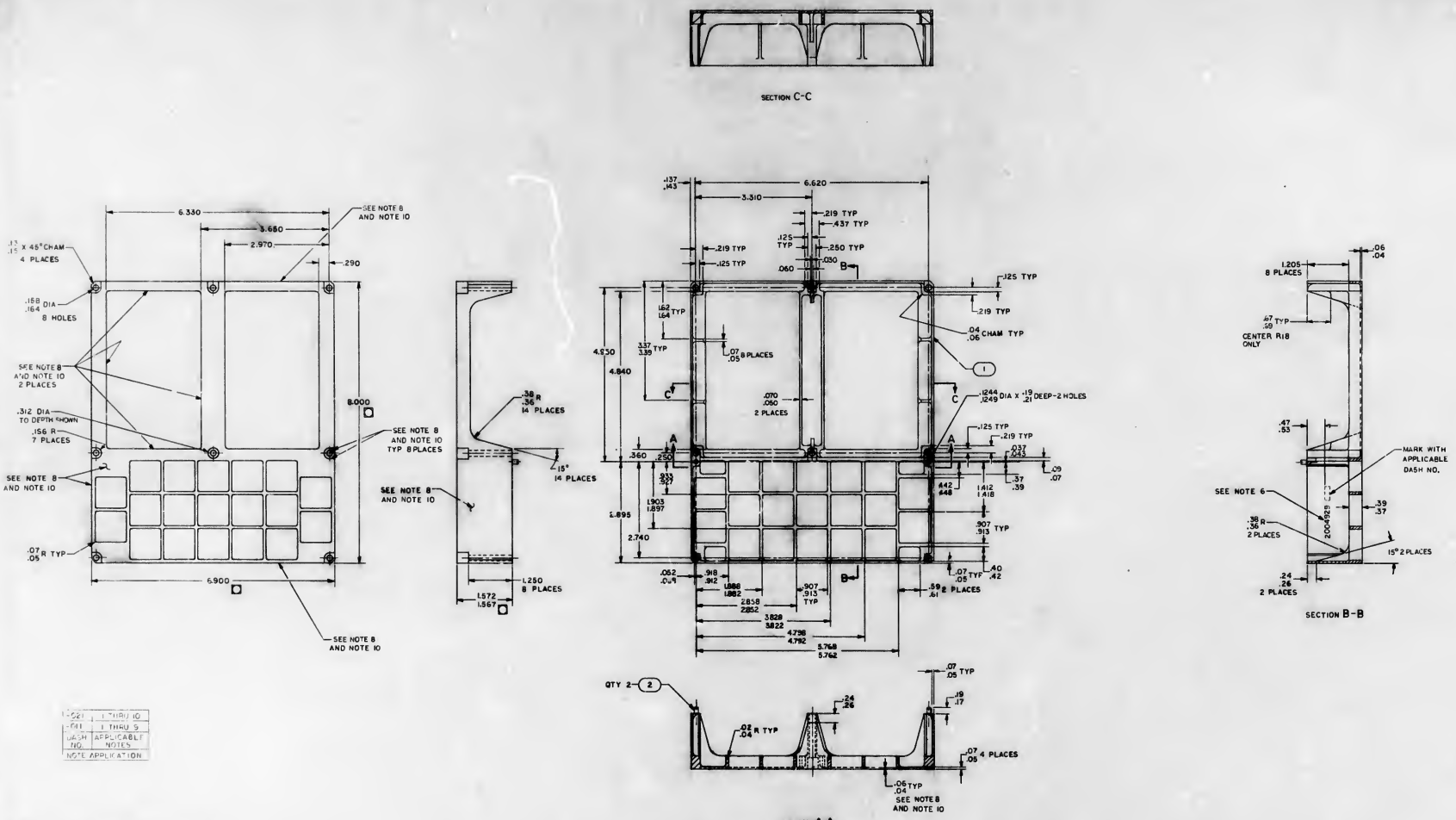

DASH NO.	APPLICABLE NOTES
-001	1 THRU 10
-011	1 THRU 5
NOTE APPLICATION	

NOTES

1. MATL: 6061-T6-AL PER QQ-A-250/11, TEMP 6
2. REMOVE BURRS AND SHARP EDGES .005/.015
3. ALL SURFACES 125/
4. CHROMATE PER MIL-C-5541, TYPE II, GRADE C, CLASS B
5. UNLESS OTHERWISE SPECIFIED ALL FILLETS AND RADII TO BE .09 R MAX
6. MARK .125/.14 HIGH BLACK CHARACTERS PER NDI002019 AND NDI002122, TYPE II, CLASS 2 USING INK 1006271-10
7. DIMENSIONS CONTROLLED BY ICD MNDI 5-116
8. [illegible] INDICATED SURFACES WITH 1006809 - GRAY EPOXY ENAMEL PER 1002279
9. INTERPRET DRAWING IN ACCORDANCE WITH STANDARDS PRESCRIBED BY MIL-D-70327
10. FINISH [illegible] INDICATED SURFACES PER NDI002277

USING NDI 2004928-003

QTY REQD	QTY REQD	PART OR IDENTIFYING NO	NOMENCLATURE OR DESCRIPTION
2	2	MS16555-625	PIN, DOWEL
1	1	2004929-001	COVER, FRONT
021	011		LIST OF MATERIALS

2003950	
2003998	
2003900	
NEXT ASSY	USED ON
APPLICATION	

UNLESS OTHERWISE SPECIFIED DIMENSIONS ARE IN INCHES
TOLERANCES ON
FRACTIONS ± DECIMALS ±.005 ANGLES ±2°
DO NOT SCALE THIS DRAWING
MATERIAL SEE NOTE 1
HEAT TREATMENT NONE
FINAL FINISH SEE NOTES 9 & 8

MIT INSTRUMENTATION LAB CAMBRIDGE MASS.
DRAWN DATE
CHECKED
APPROVED
APPROVED
MASA APPROVAL
EST APPROVAL
EST APPROVAL

MANNED SPACECRAFT CENTER HOUSTON, TEXAS

COVER, FRONT
AGC DSKY

CODE IDENT NO. 80230 SIZE J MASA DRAWING NO. 2004929
SCALE 1/1 WT SHEET 1 OF

MASTER

2004929 D

2004929 -

REV LTR | DESCRIPTION

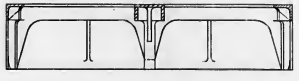

SECTION C-C

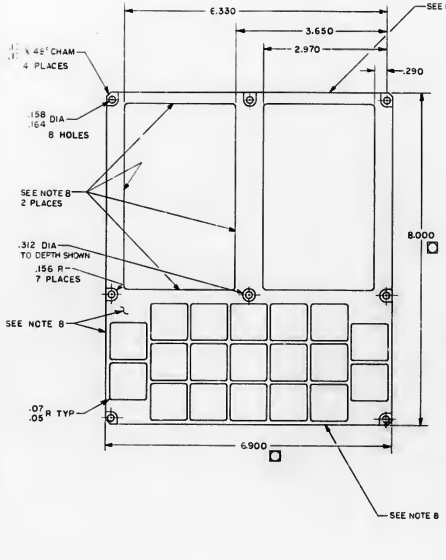

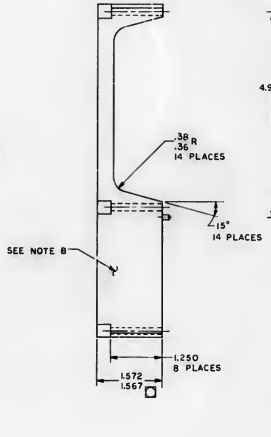

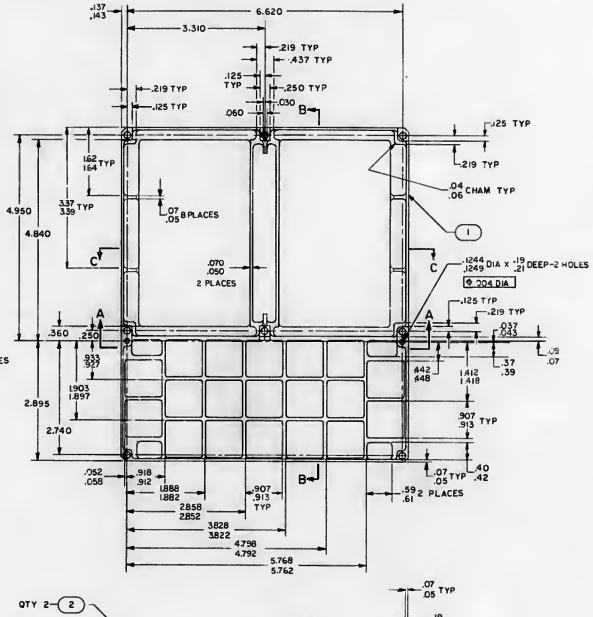

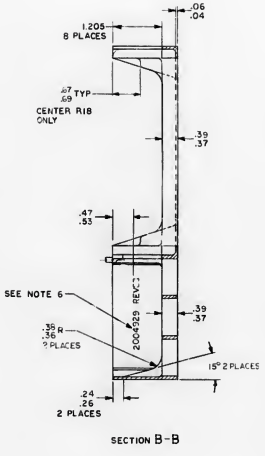

SECTION B-B

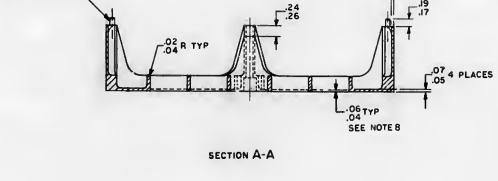

SECTION A-A

NOTES

1. MATL:6061-T6-AL PER QQ-A-250/11,TEMP6
2. REMOVE BURRS AND SHARP EDGES.005/.015
3. ALL SURFACES 125/
4. CHROMATE PER MIL-C-5541,TYPE II,GRADE C,CLASS B
5. UNLESS OTHERWISE SPECIFIED ALL FILLETS AND RADII TO BE .09 R MAX
6. MARK .10/.14 HIGH BLACK CHARACTERS PER NDI002019 AND NDI002122,TYPE II,CLASS 2 USING INK 1006271-10
7. ◯ DIMENSIONS CONTROLLED BY ICD MH01
8. ◯ PAINT INDICATED SURFACES WITH 101C729-1 RED GRAY EPOXY ENAMEL PER NDI002110
9. INTERPRET DRAWING IN ACCORDANCE WITH STANDARDS PRESCRIBED BY MIL-D-70327

QTY REQD	PART OR IDENTIFYING NO	NOMENCLATURE OR DESCRIPTION
2	MS16555-625	PIN, DOWEL
2	2004929-001	COVER, FRO

LIST OF MATERIALS

2003900	NEXT ASSY	USE'D ON
	APPLICATION	

UNLESS OTHERWISE SPECIFIED DIMENSIONS ARE IN INCHES
TOLERANCES ON FRACTIONS ± DECIMALS ±.005 ANGLES ± 2°
DO NOT SCALE THIS DRAWING
MATERIAL SEE NOTE 1
HEAT TREATMENT NONE
FINAL FINISH SEE NOTES 4 & 8

INSTRUMENTATION LAB Cambridge Mass. DEPT.
DRAWN DATE
CHECKED
APPROVAL
APPROVAL
NASA APPROVAL
MIT APPROVAL
MIT APPROVAL

MANNED SPACECRAFT C
HOUSTON, TEXAS

COVER, FRO
AGC DSKY

CODE IDENT NO 80230 | SIZE J | NASA DWG 2004
SCALE 1/1 | WT.

2004929 -

SYM	REVISIONS DESCRIPTION	DATE	APPROVAL
	2004929		

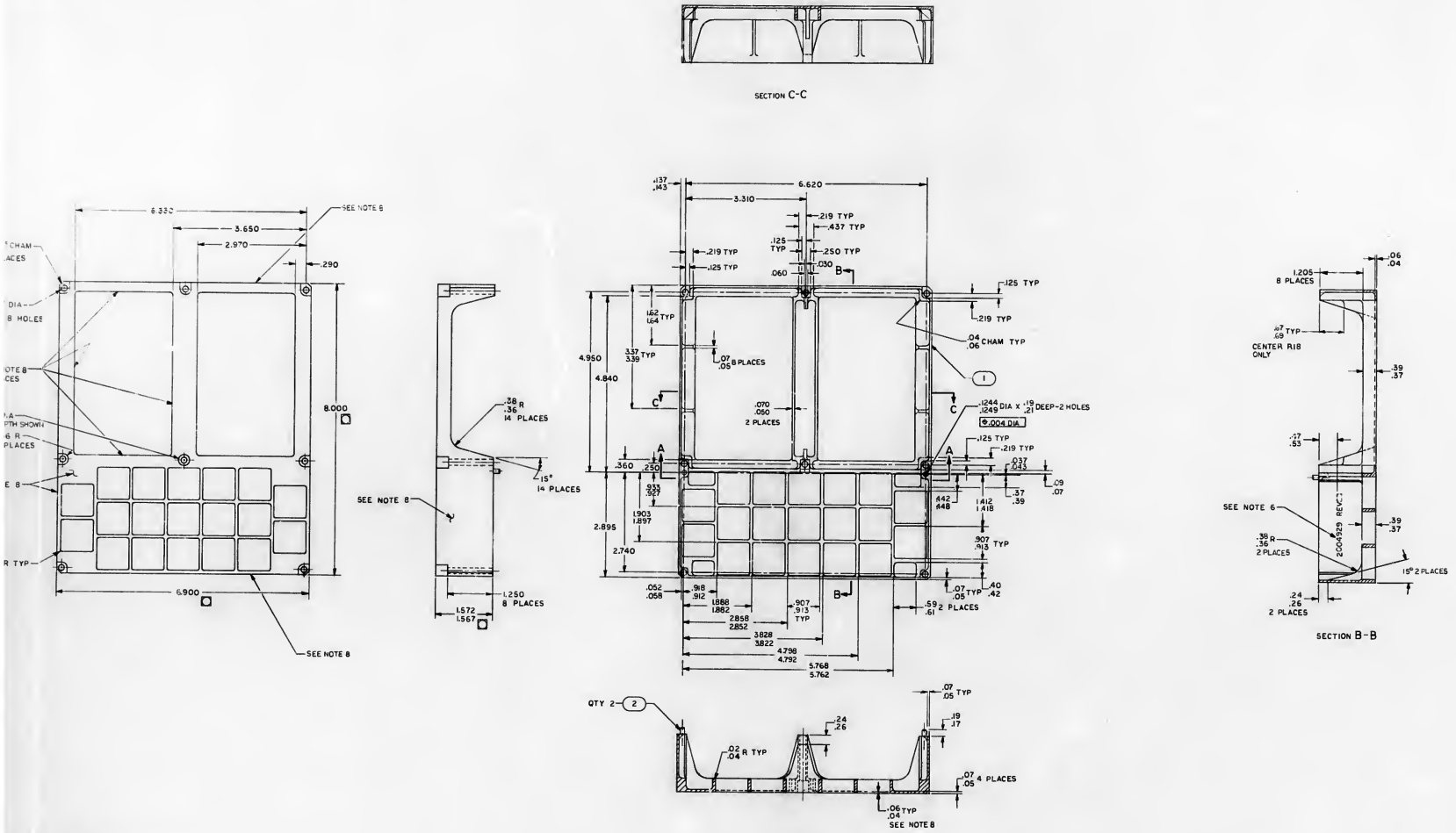

NOTES:

1. MAT'L 6061-T6-AL PER QQ-A-250/11,TEMP 6
2. REMOVE BURRS AND SHARP EDGES.005/.015
3. ALL SURFACES 125
4. CHROMATE PER MIL-C-5541,TYPE II,GRADE C,CLASS 8
5. UNLESS OTHERWISE SPECIFIED ALL FILLETS AND RADII TO BE .05 R MAX
6. MARKING/.4 HIGH BLACK CHARACTERS PER NDIO02019 AND NDIO02122,TYPE II,CLASS 2 USING INK IO06271-D
7. DIMENSIONS CONTROLLED BY ICD MH01
8. PAINT INDICATED SURFACES WITH IO10729-MED GRAY EPOXY ENAMEL PER NDIO02110
9. INTERPRET DRAWING IN ACCORDANCE WITH STANDARDS PRESCRIBED BY MIL-D-70327

QTY REQD	PART OR IDENTIFYING NO	NOMENCLATURE OR DESCRIPTION	FIND NO
2	MS16555-625	PIN, DOWEL	2
1	2004929-001	COVER, FRONT	

011 LIST OF MATERIALS

M I T INSTRUMENTATION LAB Cambridge Mass

MANNED SPACECRAFT CENTER HOUSTON, TEXAS

DRAWN / CHECKED / APPROVAL / APPROVAL — DATE

NASA APPROVAL / M I T APPROVAL / MIT APPROVAL

COVER, FRONT
AGC DSKY

CODE IDENT NO 80230 | SIZE J | NASA DRAWING NO 2004929

SCALE 1/1 | WT | SHEET 1 OF 1

UNLESS OTHERWISE SPECIFIED DIMENSIONS ARE IN INCHES
TOLERANCES ON
FRACTIONS ± | DECIMALS ±.005 | ANGLES ±2°
DO NOT SCALE THIS DRAWING
MATERIAL SEE NOTE 1
HEAT TREATMENT NONE
FINAL FINISH SEE NOTES 4 & 8

2003900
NEXT ASSY | USED ON
APPLICATION

2004929